RIGHT OF WAY NOTES:

RIGHTS-OF-WAY FOR THE EXISTING ELECTRICAL DISTRIBUTION SYSTEM ARE INCOMPLETE.
THIS DESIGN HAS BEEN DEVELOPED WITH THE ASSUMPTION THAT THE DISTRIBUTION SYSTEM UPGRADES ARE UNANIMOUSLY DESIRED AND AGREED TO BY THE RESIDENTS, AND THAT ADDITIONAL RIGHTS-OF-WAY REQUIRED FOR THE IMPLEMENTATION OF THIS DESIGN WILL BE PROVIDED BY THE RESIDENTS WITHOUT DELAY OR COMPENSATION.
BURIED FACILITIES SHALL BE PLACED IN AVAILABLE EASEMENTS, OR THE FACILITIES ARE TO FOLLOW APPROXIMATELY THE CORRIDOR UTILIZED FOR THE EXISTING ELECTRICAL DISTRIBUTION SYSTEM.
ABOVE GROUND FACILITIES SHALL BE PLACED IN AVAILABLE EASEMENTS, LOCATED IN THE GENERAL VICINITY OF THE EXISTING EQUIPMENT BEING REPLACED, LOCATED AS INDICATED ON THE DRAWINGS, OR AS FIELD MODIFIED FOR CONSTRUCTABILITY.

GENERAL NOTES:

1. ALL WORK SHALL COMPLY WITH THE MOST RECENT EDITIONS OF THE NESC.
2. THIS DRAWING WAS CREATED FROM INFORMATION PROVIDED FOR THE PROJECT; AND IT DOES NOT REPRESENT AN ASBUILT SURVEY OF THE CITY.
3. RETIRE MOST EXISTING ELECTRICAL DISTRIBUTION FACILITIES, ALL EXISTING TRANSFORMERS, AND 3ø JUNCTION BOXES.
4. ALL PRIMARY CABLES ABANDONED IN PLACE SHALL BE CUT TO 24" BELOW GRADE.
5. LIGHT POLES SHALL REMAIN WITH EXISTING FIXTURES TO BE REMOVED AND REINSTALLED.
6. REPLACE BROKEN BULBS AND GLASS IN LIGHT FIXTURES, REMOUNT FIXTURE PER DETAIL
7. ALL NEW SECONDARY/SERVICES TO BE XHHW-2 OR USE-2 INSULATED.
8. ALL NEW SERVICES TO BE #4 STRANDED COPPER, UNLESS OTHERWISE NOTED.
9. MAINTAIN 3' SEPARATION BETWEEN FACE OF EQUIPMENT AND EDGE OF BOARDWALK.
10. OTHER UTILITIES ARE IN CLOSE PROXIMITY TO WORK.

EXISTING LIGHT POLE	✳
ELECTRIC METER	•
PEDESTAL	△
PAD MOUNTED TRANSFORMER	▣ 15kVA
PAD MOUNTED JUNCTION BOX	▣

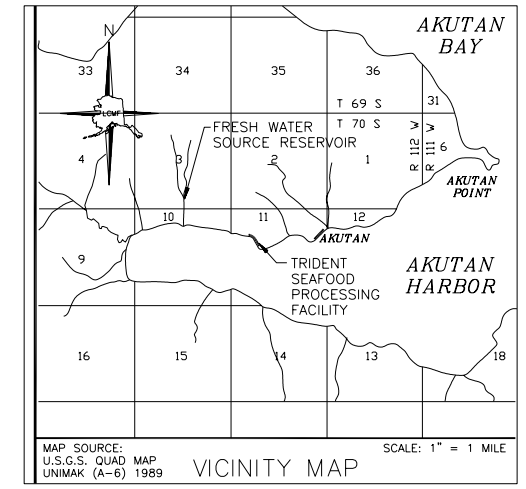

SHEET E-3

100 0 50 100 200
GRAPHIC SCALE

ELECTRICAL SITE PLAN

XREF:

PLOTTING DATE:

ELECTRICAL DISTRIBUTION SYSTEM
CONVERSION TO 7200/12470 AND RELATED UPGRADES

AKUTAN, ALASKA

LCMF LLC
139 E. 51st Ave. · Anchorage, Alaska 99503 · (907)275-1850
PO Box 220471
Anchorage, AK 99522
(907) 345-6188
Cell: (907) 242-7669
Email: erico@gci.net
ERICO ELECTRICAL ENGINEERING

95% DOCUMENTS

REVISIONS:
REVISION 1: 3/22/07 – ADDED 150 kVA TRANSFORMER
REVISION 2: 12/5/07 – ADDED GENERATOR FEEDER

DRAWN BY: GME
CHECKED BY: GME
DATE: 5-21-07
JOB NUMBER:
DWG FILE:

DRAWING TITLE:
ELECTRICAL SITE PLAN

SHEET: OF
E-1

RIGHT OF WAY NOTES:
RIGHTS-OF-WAY FOR THE EXISTING ELECTRICAL DISTRIBUTION SYSTEM ARE INCOMPLETE.
THIS DESIGN HAS BEEN DEVELOPED WITH THE ASSUMPTION THAT THE DISTRIBUTION SYSTEM UPGRADES ARE UNANIMOUSLY DESIRED AND AGREED TO BY THE RESIDENTS, AND THAT ADDITIONAL RIGHTS-OF-WAY REQUIRED FOR THE IMPLEMENTATION OF THIS DESIGN WILL BE PROVIDED BY THE RESIDENTS WITHOUT DELAY OR COMPENSATION.
BURIED FACILITIES SHALL BE PLACED IN AVAILABLE EASEMENTS, OR THE FACILITIES ARE TO FOLLOW APPROXIMATELY THE CORRIDOR UTILIZED FOR THE EXISTING ELECTRICAL DISTRIBUTION SYSTEM.
ABOVE GROUND FACILITIES SHALL BE PLACED IN AVAILABLE EASEMENTS, LOCATED IN THE GENERAL VICINITY OF THE EXISTING EQUIPMENT BEING REPLACED, LOCATED AS INDICATED ON THE DRAWINGS, OR AS FIELD MODIFIED FOR CONSTRUCTABILITY.

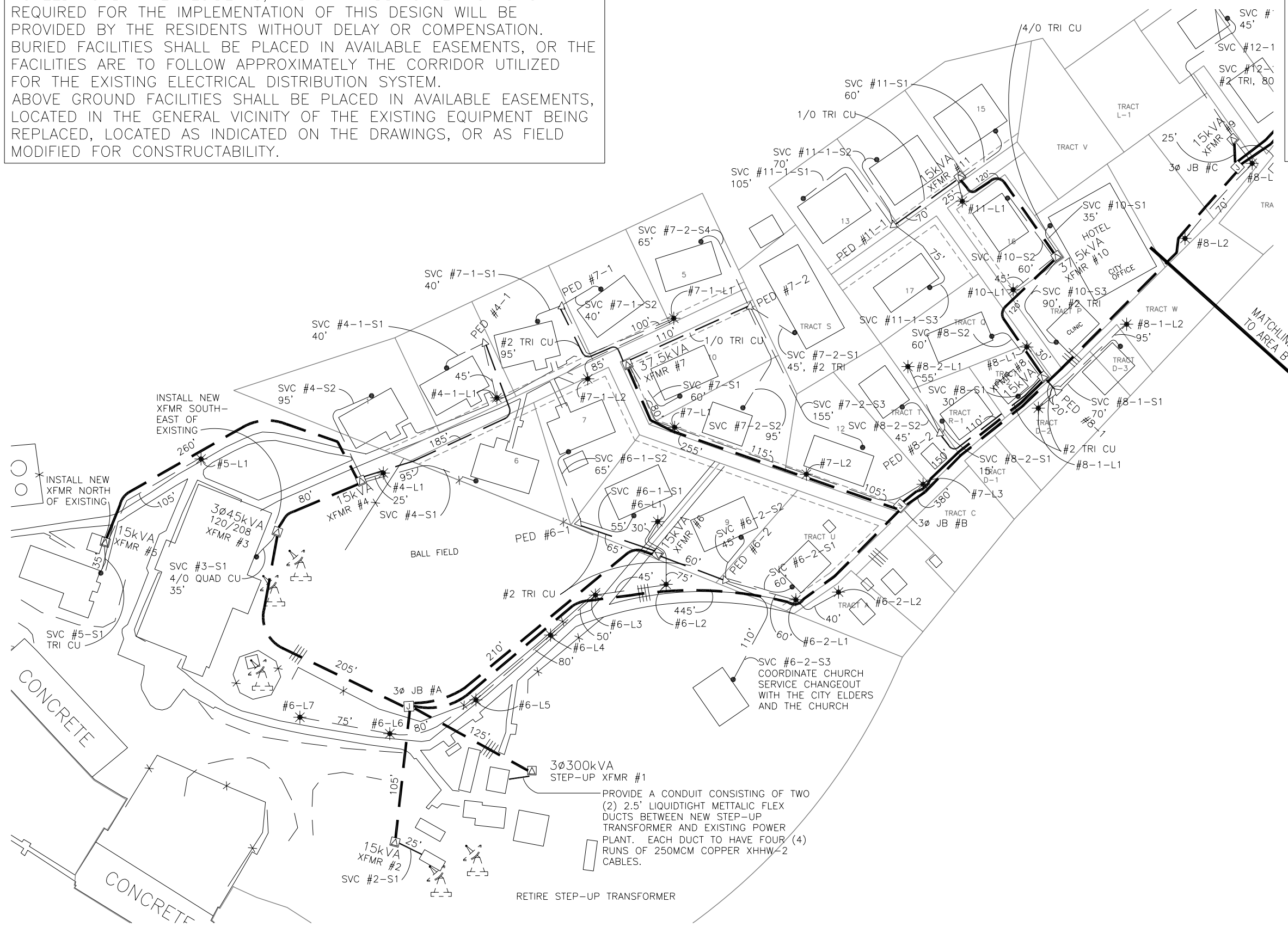

AREA A

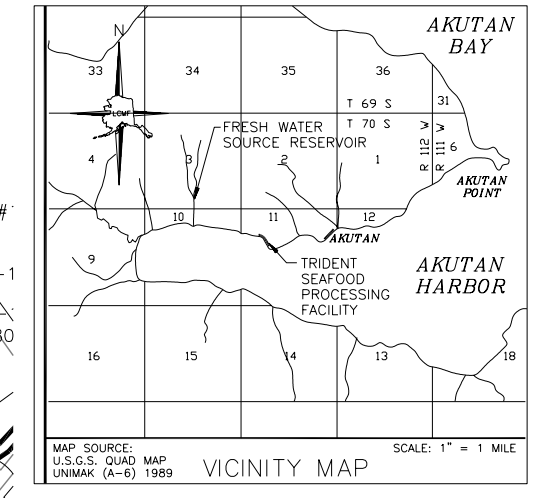

SHEET NOTES:
1. SEE E-1 FOR GENERAL NOTES.

ELECTRICAL DISTRIBUTION SYSTEM
CONVERSION TO 7200/12470 AND RELATED UPGRADES

AKUTAN, ALASKA

LCMF LLC
139 E. 51st Ave. · Anchorage, Alaska 99503 · (907)275-1850
PO Box 220471
Anchorage, AK 99522
(907) 345-6188
Cell: (907) 242-7669
Email: eric@lcmf.net
PERICO ELECTRICAL ENGINEERING

95% DOCUMENTS

REVISIONS:
REVISION 1: 3/22/07 – ADDED 150 kVA TRANSFORMER
REVISION 2: 12/5/07 – ADDED GENERATOR FEEDER

DRAWN BY: GME
CHECKED BY: GME
DATE: 5-21-07
JOB NUMBER:
DWG FILE:

DRAWING TITLE:
ELECTRICAL SITE PLAN
AREA A

SHEET: OF
E-2

XREF:
PLOTTING DATE:

SHEET NOTES:
1. SEE E-1 FOR GENERAL NOTES.

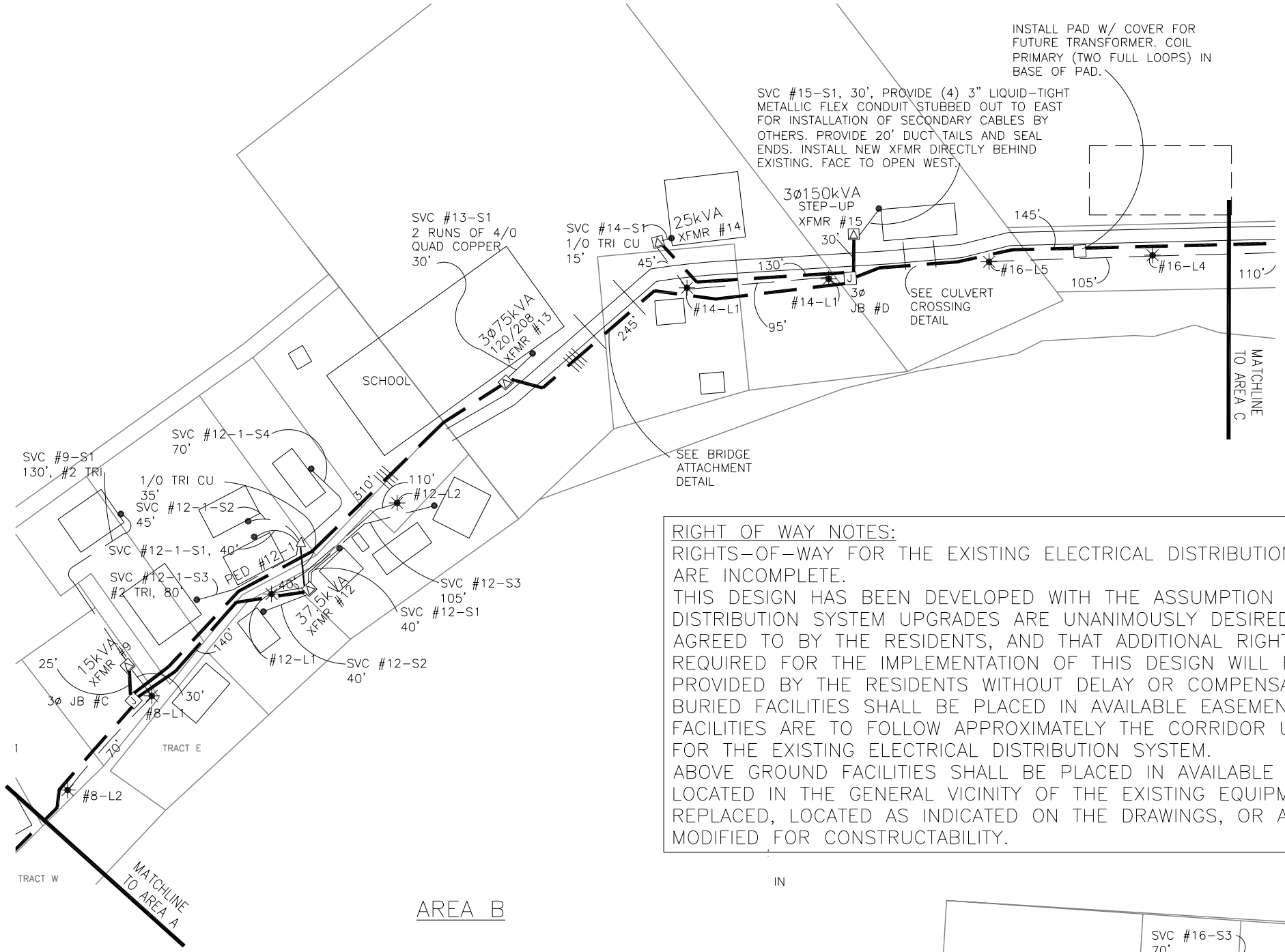

AREA B

RIGHT OF WAY NOTES:
RIGHTS-OF-WAY FOR THE EXISTING ELECTRICAL DISTRIBUTION SYSTEM ARE INCOMPLETE.
THIS DESIGN HAS BEEN DEVELOPED WITH THE ASSUMPTION THAT THE DISTRIBUTION SYSTEM UPGRADES ARE UNANIMOUSLY DESIRED AND AGREED TO BY THE RESIDENTS, AND THAT ADDITIONAL RIGHTS-OF-WAY REQUIRED FOR THE IMPLEMENTATION OF THIS DESIGN WILL BE PROVIDED BY THE RESIDENTS WITHOUT DELAY OR COMPENSATION.
BURIED FACILITIES SHALL BE PLACED IN AVAILABLE EASEMENTS, OR THE FACILITIES ARE TO FOLLOW APPROXIMATELY THE CORRIDOR UTILIZED FOR THE EXISTING ELECTRICAL DISTRIBUTION SYSTEM.
ABOVE GROUND FACILITIES SHALL BE PLACED IN AVAILABLE EASEMENTS, LOCATED IN THE GENERAL VICINITY OF THE EXISTING EQUIPMENT BEING REPLACED, LOCATED AS INDICATED ON THE DRAWINGS, OR AS FIELD MODIFIED FOR CONSTRUCTABILITY.

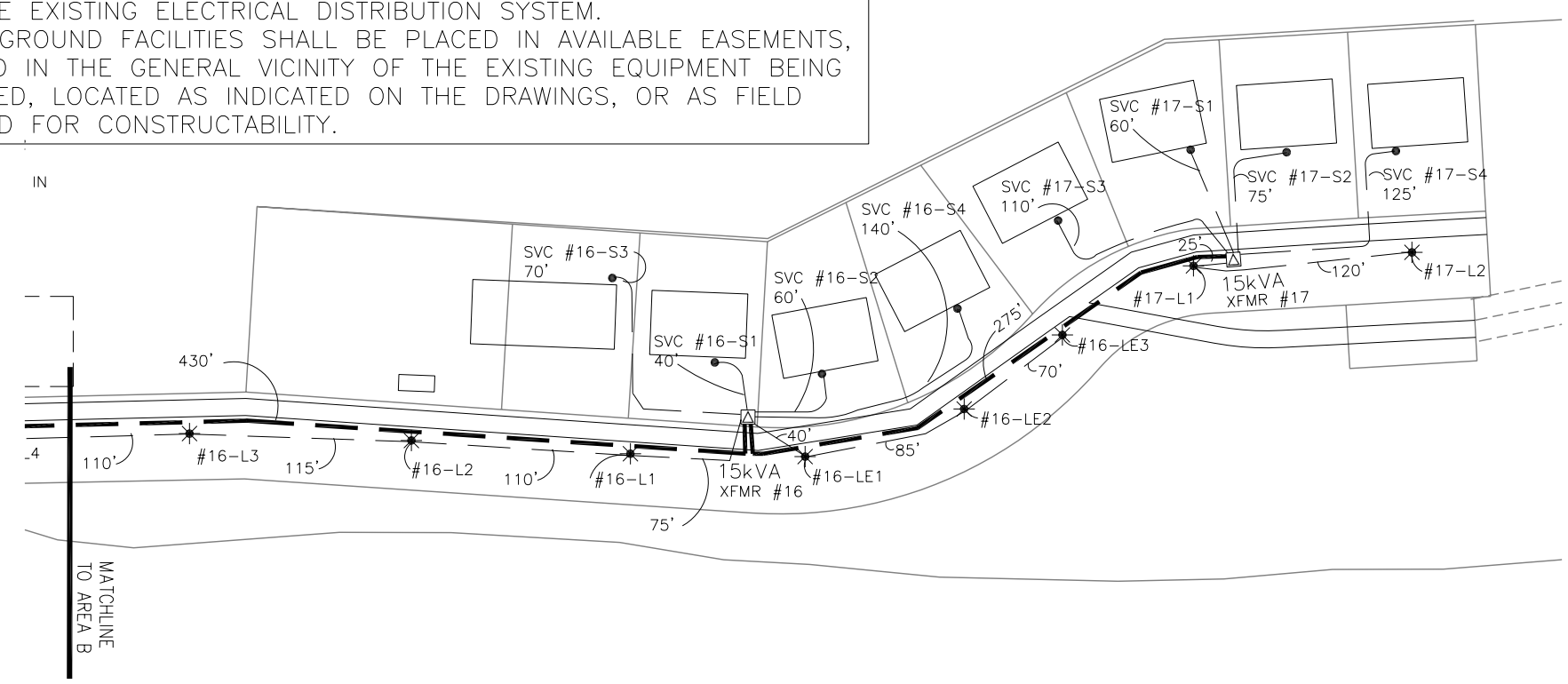

AREA C

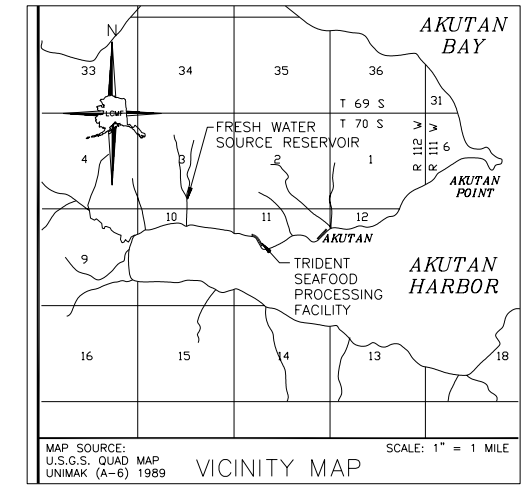

VICINITY MAP

EXISTING LIGHT POLE
ELECTRIC METER
PEDESTAL
PAD MOUNTED TRANSFORMER 15kVA
PAD MOUNTED JUNCTION BOX

GRAPHIC SCALE 40 0 20 40 80

ELECTRICAL DISTRIBUTION SYSTEM
CONVERSION TO 7200/12470 AND RELATED UPGRADES

AKUTAN, ALASKA

LCMF LLC
139 E. 51st Ave. · Anchorage, Alaska 99503 · (907)275-1850
PERICO ELECTRICAL ENGINEERING
PO Box 220471
Anchorage, AK 99522
(907) 345-6188
Cell: (907) 242-7869
Email: erico@gci.net

95% DOCUMENTS

REVISIONS:
REVISION 1: 3/22/07 – ADDED 150 kVA TRANSFORMER
REVISION 2: 12/5/07 – ADDED GENERATOR FEEDER

DRAWN BY: GME
CHECKED BY: GME
DATE: 5-21-07
JOB NUMBER:
DWG FILE:

DRAWING TITLE:
ELECTRICAL SITE PLAN
AREA B & C

SHEET: OF
E-3

XREF:
PLOTTING DATE:

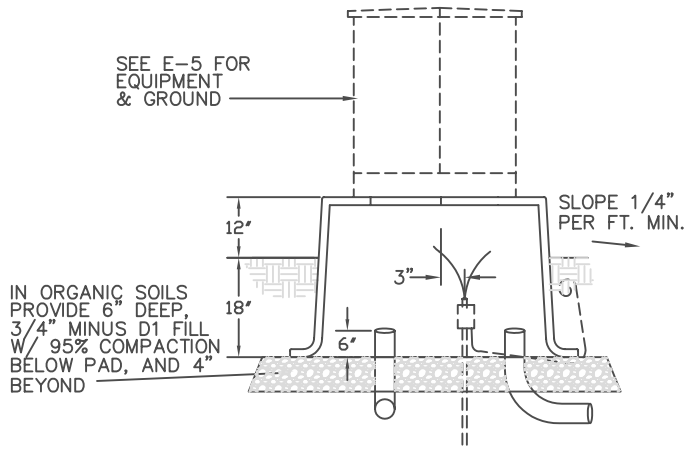

UM1: FIBERGLASS PAD
NTS

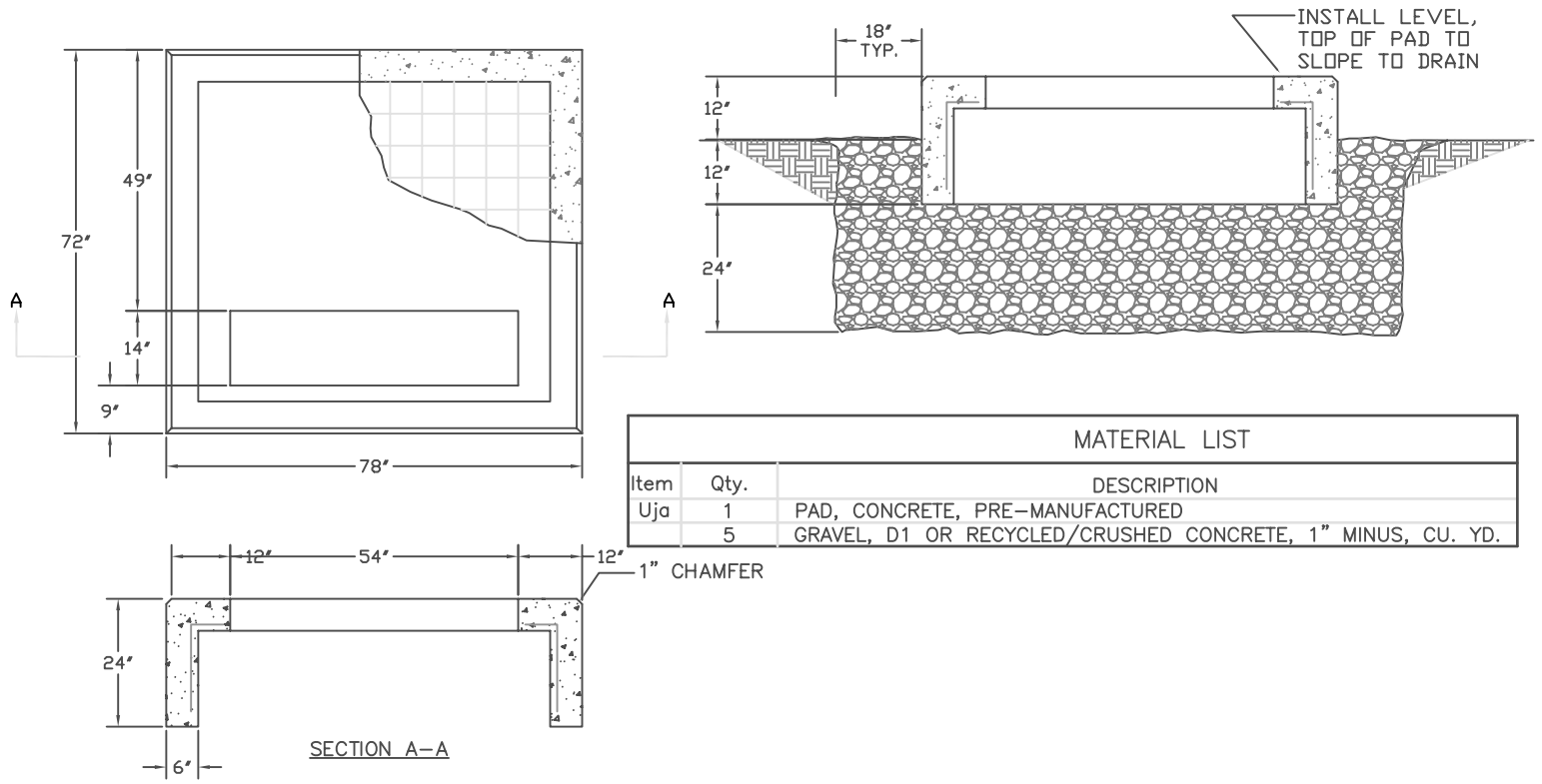

MATERIAL LIST		
Item	Qty.	DESCRIPTION
Uja	1	PAD, CONCRETE, PRE-MANUFACTURED
	5	GRAVEL, D1 OR RECYCLED/CRUSHED CONCRETE, 1" MINUS, CU. YD.

UM3: 3-PHASE TRANSFORMER PAD
NTS

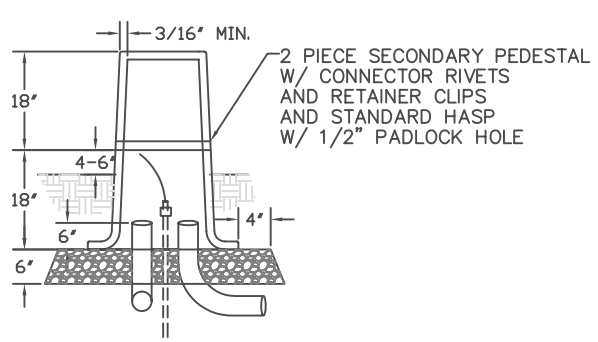

FIBERGLASS PEDESTAL
NTS

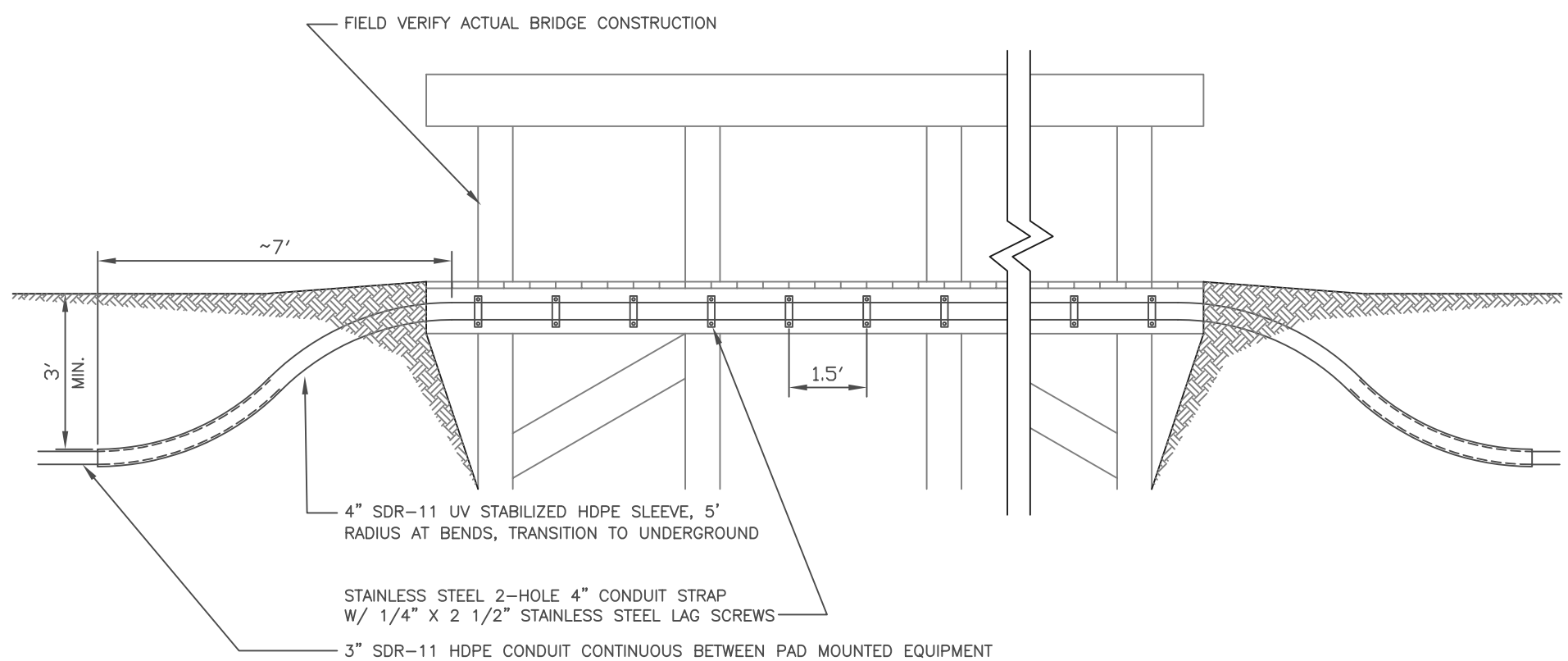

CONDUIT ATTACHMENT TO BRIDGE
NTS

ELECTRICAL DISTRIBUTION SYSTEM
CONVERSION TO 7200/12470 AND RELATED UPGRADES

AKUTAN, ALASKA

LCMF LLC
139 E. 51st Ave. · Anchorage, Alaska 99503 · (907) 273-1830
PO Box 220471
Anchorage, AK 99522
(907) 345-6168
Cell: (907) 242-7669
Email: srrico@gci.net
ERRICO ELECTRICAL ENGINEERING

95% DOCUMENTS

REVISIONS:
REVISION 1: 3/22/07 – ADDED 150 kVA TRANSFORMER
REVISION 2: 12/5/07 – ADDED GENERATOR FEEDER

DRAWN BY: GME
CHECKED BY: GME
DATE: 5-21-07
JOB NUMBER:
DWG FILE:

DRAWING TITLE:
ELECTRICAL DETAILS

SHEET: OF
E-4

XREF:
PLOTTING DATE:

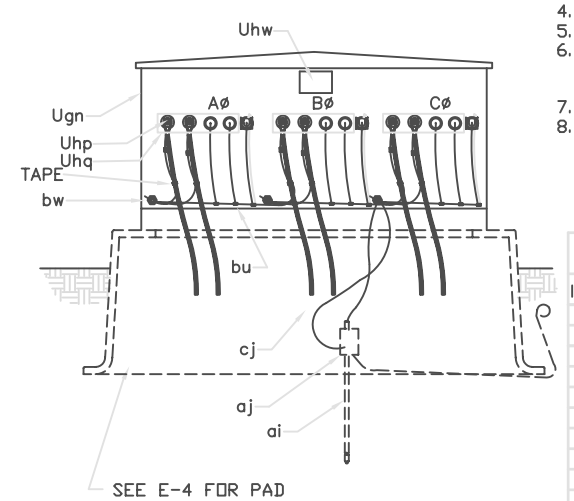

NOTES:
1. PROVIDE THREE 4-WAY JUNCTION RECEPTACLES.
2. PROVIDE LOAD-BREAK ELBOW TERMINATIONS.
3. PROVIDE DUST COVERS ON ALL NON-UTILIZED BUSHINGS.
4. PROVIDE STANDOFF BUSHINGS FOR EACH NORMALLY OPEN CABLE.
5. PROVIDE #2 BARE STRANDED COPPER GROUND LOOP.
6. ALL NEUTRALS AND METALLIC NON-CURRENT CARRYING PARTS SHALL BE INTERCONNECTED AND GROUNDED TO THE JUNCTION BOX GROUND LOOP WITH COMPRESSION CONNECTOR.
7. PROVIDE FULL LOOPS IN BASE OF PAD FOR ALL PRIMARY CABLES.
8. PROVIDE SUFFICIENT PRIMARY NEUTRAL GROUND CONNECTION TO PERMIT READY DISCONNECTION OF ELBOW AND MOUNTING ON STANDOFF BUSHING.

MATERIAL LIST

Item	Qty	DESCRIPTION
ai	1	ROD, GROUND, 5/8" X 8'-0", GALVANIZED STEEL
aj	1	CONNECTION, EXOTHERMIC WELD TO GROUND ROD
bu	-	COMPRESSION CONNECTOR, EQUIPMENT GROUND, AS REQ'D
cj	-	GROUND WIRE, #2 BaCuStr, AS REQ'D
Ugn	1	ENCLOSURE, PADMOUNTED, STEEL
Uhw	2	SIGNS, "DANGER" AND "WARNING"
Uhq	3	MODULE, FEED-THRU, MULTIPOINT, 4-POSITION W/ 2 STAND OFF BRACKETS EA.
	6	ANCHORS, CONCRETE, 3/8"
	-	CABLE TAGS, AS REQ'D
	-	DECALS/NUMBERS, 3" HIGH, REFLECTIVE, AS REQ'D
	1	EQUIPMENT LOCK, TAMPERPROOF
Uhp	-	ELBOW TERMINATION, AS REQ'D
	-	DUST COVER, AS REQ'D
bw	3	CASE GROUND
	-	COLD- OR HOT-SHRINK CONDUIT PRIMARY CABLE SEALING BOOT, AS REQ'D

UM3-B: 3-PHASE JB

NTS

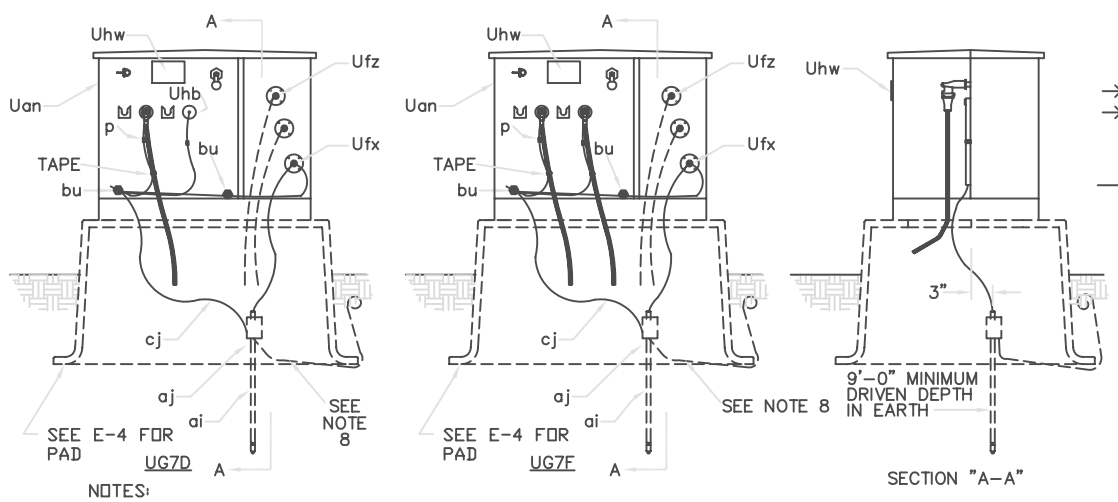

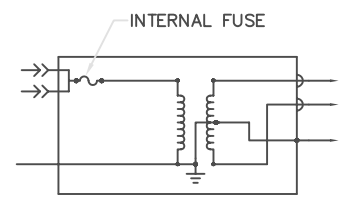

WIRING DIAGRAM
UG7

NOTES:
1. PROVIDE SUFFICIENT PRIMARY NEUTRAL PIGTAIL AND CABLE SLACK TO PERMIT READY DISCONNECTION OF ELBOW AND MOUNTING ON PARKING STAND. TRAIN CABLES TO PROVIDE A FULL LOOP OF CABLES INSIDE PAD.
2. PROVIDE A COMPLETE LOOP OF #2 AWG BaCuSTR TO THE GROUND ROD.
3. GROUND BODIES OF ELBOW CONNECTORS WITH #14 SOLID COPPER.
4. BOND BASE OF BUSHING WELL TO CASE WITH #14 SOLID COPPER.
5. GROUND STAND OFF INSULATOR (IF INSTALLED) WITH #4 AWG BaCuSTR.
6. INSTALL 'DANGER' SIGN INSIDE TRANSFORMER ENCLOSURE AND 'CAUTION' SIGN ON OUTSIDE SURFACE OF ENCLOSURE.
7. TAG PRIMARY AND SERVICE TERMINATIONS. SECURE TAG WITH #37 TAPE.
8. PROVIDE #4 BARE STRANDED COPPER EQUIPMENT BONDING CONDUCTOR FOR USE BY TELECOMMUNICATIONS FOR BONDING THEIR ADJACENT PAD MOUNTED EQUIPMENT (LESS THAN 7' AWAY).
9. SECURE TRANSFORMER TO PAD WITH THE SIESMIC HOLD-DOWNS (SUPPLIED WITH TRANSFORMER) UTILIZING BOLTS MATCHING THE HOLD-DOWN'S HOLE SIZE AND ANGLE BACKING PLATES SNUGGED-UP TO THE INSIDE FACES OF THE THE PAD.

MATERIAL LIST

Item	UG7D	UG7F	DESCRIPTION
p			CONNECTOR, COMPRESSION, AS REQ'D
ai	1	1	ROD, GROUND, 5/8" X 8'-0", GALVANIZED STEEL
aj	2	2	EXOTHERMIC WELD CONNECTION TO GROUND ROD
bu	2	2	TRANSFORMER, CASE GROUND
cj	-	-	GROUND WIRE, #2 AWG BaCuStr, AS REQ'D
Uan	1	1	TRANSFORMER, PADMOUNTED, LOOP FEED
Ufz	2	2	CONNECTOR BLOCK, INSULATED, 6-POSTION
Ufx	1	1	CONNECTOR BLOCK, NEUTRAL, 8-POSITION
Uhp	1	2	TERMINATION, ELBOW, LOADBREAK
Uhb	1	-	INSULATING CAP, AS REQ'D
Uhw	1	1	SIGNS, "DANGER" AND "CAUTION"
	2	2	SEISMIC HOLD-DOWN BACKING PLATE
	2	2	CABLE TAG
	1	1	DECALS/NUMBERS, 3" HIGH, REFLECTIVE, AS REQ'D
	1	1	EQUIPMENT LOCK, TAMPERPROOF
	-	-	COLD- OR HOT-SHRINK CONDUIT PRIMARY CABLE SEALING BOOT, AS REQ'D

UG7_-___: 1-PHASE TRANSFORMER

NTS

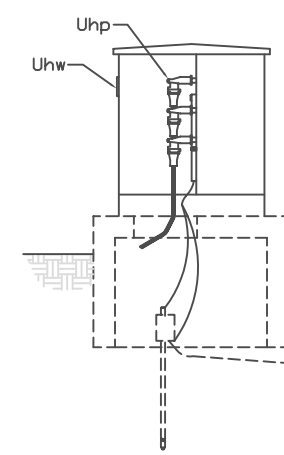

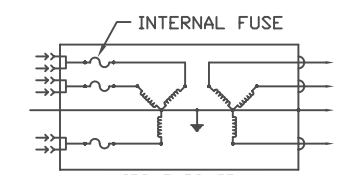

WIRING DIAGRAM
UG17B

NOTES:
1. WYE-WYE CONNECTION SHALL BE USED.
2. PROVIDE SUFFICIENT PRIMARY CONCENTRIC NEUTRAL TAILS AND TRAIN CABLES TO PERMIT READY DISCONNECTION OF ELBOWS FOR MOUNTING ON PARKING STANDS.
3. PROVIDE A COMPLETE LOOP OF ALL PRIMARY AND SERVICE CABLES IN BASE OF PAD.
4. PROVIDE A COMPLETE LOOP OF #2 AWG BARE STRANDED COPPER AROUND THE WINDOW OF TRANSFORMER; THIS GROUND LOOP IS TO BE ROUTED TO BOTH CASE GROUND AND THE SERVICE NEUTRAL BUSHING.
5. GROUND BODIES OF ELBOW TERMINATIONS WITH #14 SOLID COPPER (IT IS ACCEPTABLE TO USE ONE OF THE CONCENTRIC NEUTRALS FOR THIS).
6. BOND BASE OF BUSHING WELL TO CASE WITH #14 SOLID COPPER.
7. TAG ALL NON-GROUNDING CONDUCTORS.
8. INSTALL 'WARNING' SIGN ON INSIDE OF TRANSFORMER ENCLOSURE.
9. INSTALL 'CAUTION' SIGN ON OUTSIDE SURFACE OF ENCLOSURE.
10. UTILIZE SEISMIC HOLD DOWN BRACKETS PROVIDED WITH TRANSFORMER.

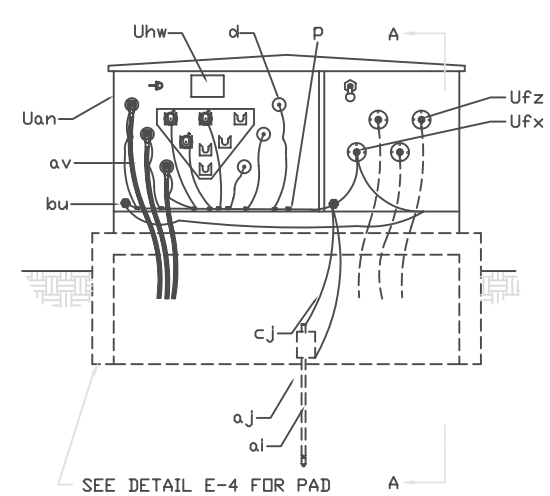

MATERIAL LIST

Item		DESCRIPTION
p	-	Connector, Compression, As Req'd
ai	1	Rod, Ground, 5/8" x 8'-0", Copper Clad Steel
aj	1	Exothermic Weld to Ground Rod
bu	2	Connector, Equipment Ground
cj	-	Ground Wire, #2 Bare Stranded Copper, As Required
d	3	Dust cover, grounded to loop
Uan	1	Transformer, Padmounted, Three Phase, Loop Feed
Ufz	3	Connector Block, Insulated, 6-Position
Ufx	1	Connector Block, Neutral, 8-Position
Uhp	6	Termination, Elbow, Loadbreak
Uhw	2	Signs, "Danger" and "Warning"
	4	Anchors, Concrete, 1/2", w/ anchoring washer
	-	Cable Tag (as required)
	1	Decals/Numbers, 3" High, Reflective, As Req'd
	1	Pad, Lock (Supplied by Owner)
	-	Cold-shrink or Hot-shrink conduit primary cable sealing boot, as req'd

UG17D-___: 3-PHASE TRANSFORMER

NTS

ELECTRICAL DISTRIBUTION SYSTEM
CONVERSION TO 7200/12470 AND RELATED UPGRADES

AKUTAN, ALASKA

LCME LLC
139 E. 51st Ave. - Anchorage, Alaska 99503 (907)273-1830
PO Box 220471
Anchorage, AK 99522
(907) 345-6162
Cell: (907) 242-7669
Email: service@lcmeak
LERRICO ELECTRICAL ENGINEERING

95% DOCUMENTS

REVISIONS:
REVISION 1: 3/22/07 - ADDED 150 kVA TRANSFORMER
REVISION 2: 12/5/07 - ADDED GENERATOR FEEDER

DRAWN BY: GME
CHECKED BY: GME
DATE: 5-21-07
JOB NUMBER:
DWG FILE:

DRAWING TITLE:
ELECTRICAL DETAILS

SHEET: OF
E-5

XREF:
PLOTTING DATE:

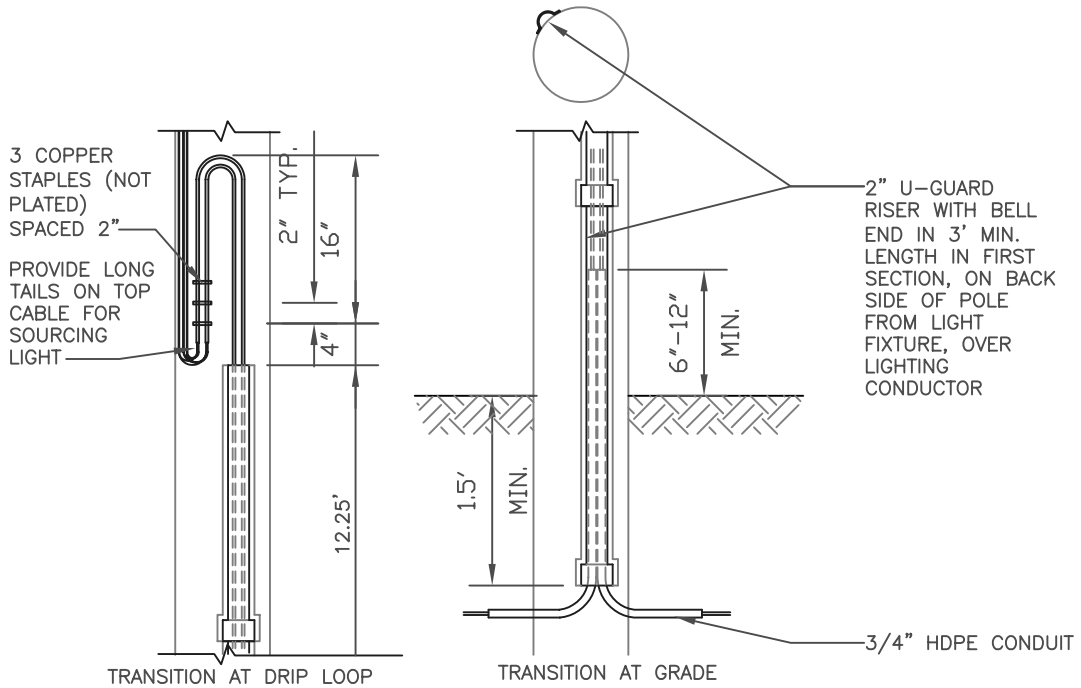

LIGHTING CONDUCTOR U-GUARD RISER DETAIL

NTS

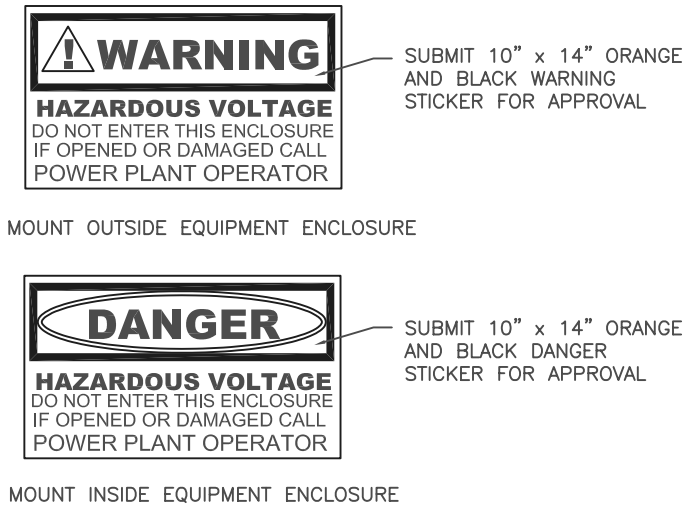

WARNING AND DANGER LABELS

NTS

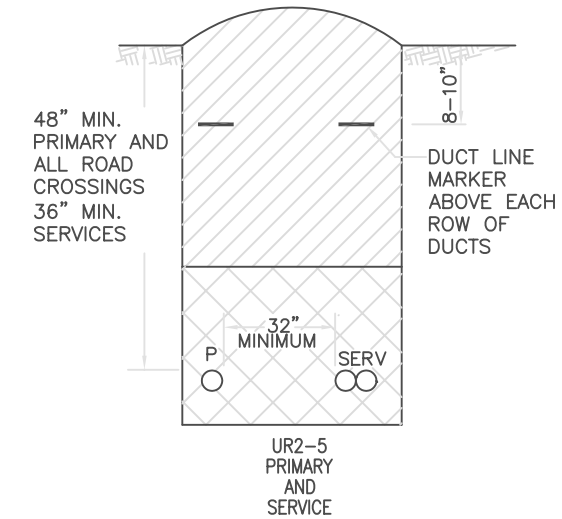

NOTES:

1. *DEPTHS SPECIFIED ARE TO FINISHED GRADE.*
2. BACKFILLING IS PART OF ALL TRENCHING UNITS. ALL BACKFILL WITHIN 12" OF CABLE OR CONDUIT SHALL BE FREE OF LARGE ROCKS AND FROZEN MATERIAL WHICH MAY CAUSE DAMAGE TO THE INSTALLED CONDUIT. COMPACT BACKFILL IN 12"-18" LIFTS.

LEGEND

- STONE FREE BACKFILL, SAND BED NOT REQUIRED
- COMPACTED BACKFILL (IN 12"-18" LIFTS) UNLESS OTHERWISE SPECIFIED
- UNDISTURBED EARTH

TRENCH DETAIL

NTS

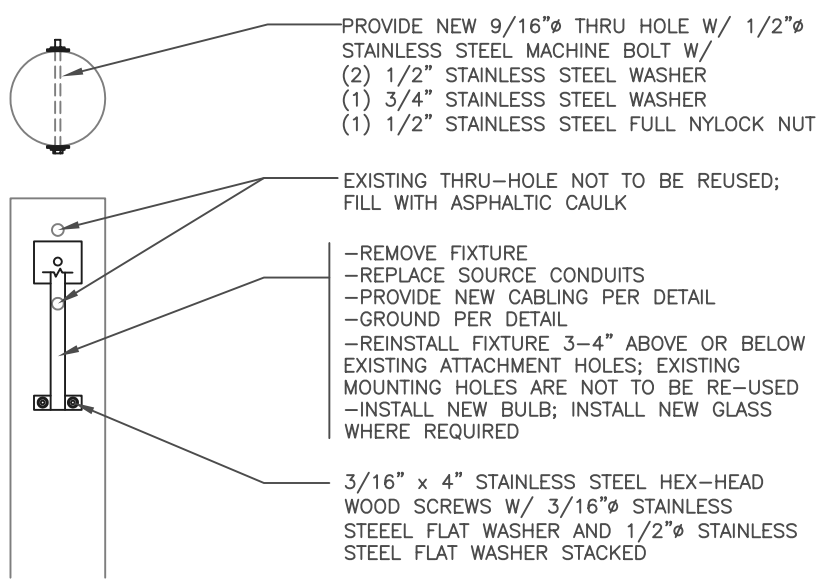

LIGHT FIXTURE MOUNTING DETAIL

NTS

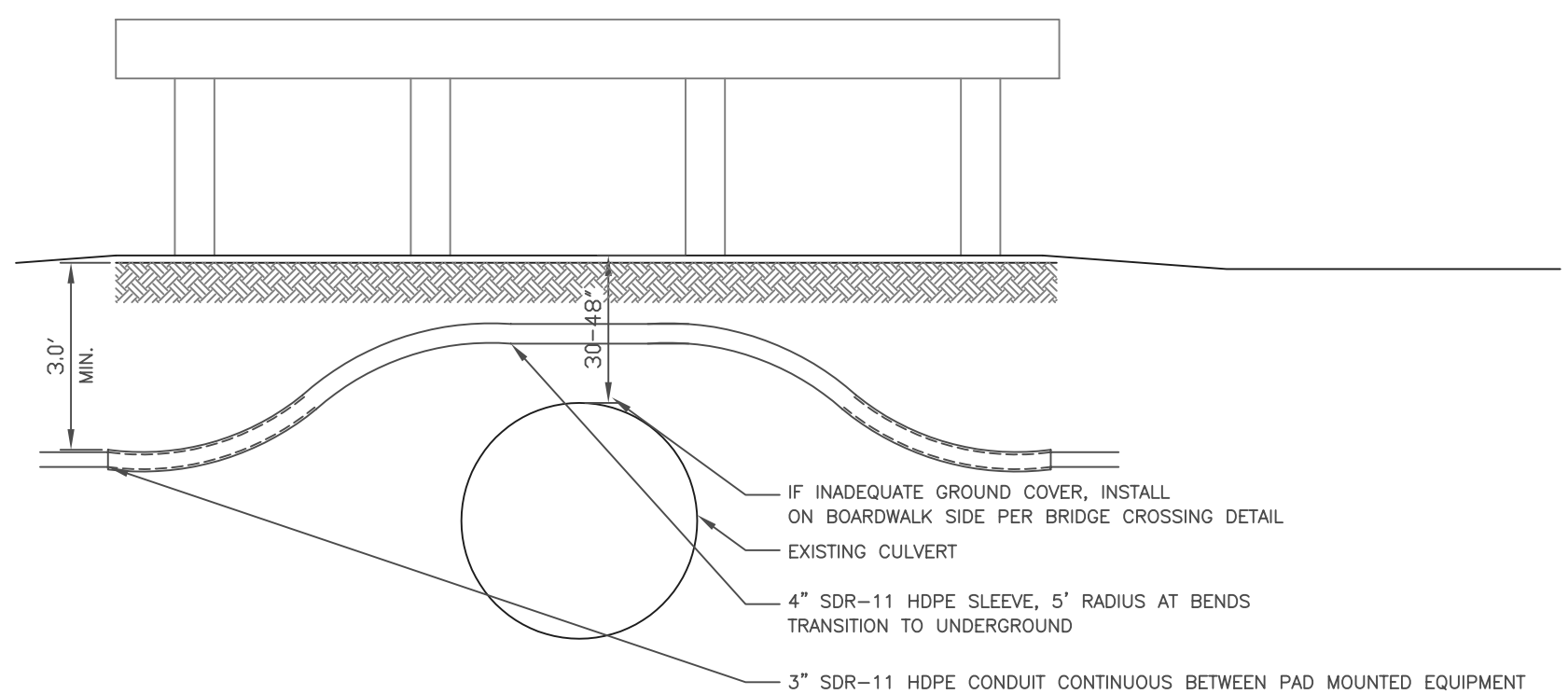

CULVERT CROSSING

NTS

ELECTRICAL DISTRIBUTION SYSTEM
CONVERSION TO 7200/12470 AND RELATED UPGRADES

AKUTAN, ALASKA

LCMF LLC
139 E. 51st Ave. · Anchorage, Alaska 99503 · (907) 273-1830
PO Box 220471
Anchorage, AK 99522
(907) 345-6168
Cell: (907) 242-7669
Email: srrico@gci.net
ERRICO ELECTRICAL ENGINEERING

95% DOCUMENTS

REVISIONS:
REVISION 1: 3/22/07 – ADDED 150 kVA TRANSFORMER
REVISION 2: 12/5/07 – ADDED GENERATOR FEEDER

DRAWN BY: GME
CHECKED BY: GME
DATE: 5-21-07
JOB NUMBER:
DWG FILE:

DRAWING TITLE:
ELECTRICAL DETAILS

SHEET: OF
E-6

XREF:
PLOTTING DATE: