URS

Tryck Nyman H ayes

CHANGE ORDER NO. 2

PROJECT: Old Harbor Small Boat Harbor Replacement **PROJECT #:** 26220230.09001

CONTRACTOR: West Construction

The Contract Documents are modified as follows upon execution of this Change Order:

DESCRIPTION:
Per email from West Construction (Bryce Erickson) on 8/25/09, they can offer the following credits:

1. Credit of $3,600.00 to deduct the work associated with fill at the trestle back wall. The City will do this with it's own forces.
2. Credit of $12,650.00 to deduct the work associated with disposing of all waste from the facilities demolished, except the float foam, which West will still remove/dispose. West will remove the floats, timber, and piling and store in the adjacent uplands storage area; and the City will take the materials from that location for salvage or disposal.

ATTACHMENTS: None.

CHANGE IN CONTRACT PRICE:	CHANGE IN CONTRACT TIME:
Original Contract Price: $1,696,985.00	Original Contract Times: ☐ WORKING DAYS ☐ CALENDAR DAYS Substantial Completion Date (days/date): 0 Ready for Final Payment Date (days/date): 0
☐ DECREASE ☑ INCREASE from previously approved Change Order No. 0 to No. 1 $75,000.00	☐ DECREASE ☐ INCREASE from previously approved Change Order No. __ to No. ____ Substantial Completion Date (days): ____ Ready for Final Payment Date (days): ____
Contract Price prior to this Change Order: $1,771,985.00	Contract Times prior to this Change Order: Substantial Completion Date (days/date): 0 Ready for Final Payment Date (days/date): 0
☑ DECREASE ☐ INCREASE of this Change Order: -$16,250.00	☐ DECREASE ☐ INCREASE of this Change Order: Substantial Completion Date (days/date): 0 Ready for Final Payment Date (days/date): 0
Contract Price Incorporating this Change Order: $1,755,735.00	Contract Times with all approved Change Orders: Substantial Completion Date (days/date): 0 Ready for Final Payment Date (days/date): 0

RECOMMENDED:	ACCEPTED:	ACCEPTED:
By: [signature]	By: [signature]	By: [signature]
Engineer (Authorized Signature)	Owner (Authorized Signature)	Contractor (Authorized Signature)
Date: 8/26/2009	Date: 8-27-2009	Date: 8/27/09

URS

Tryck Nyman H ayes

CHANGE ORDER NO. 3

PROJECT: Old Harbor Small Boat Harbor Replacement **PROJECT #:** 26220230.09001

CONTRACTOR: West Construction

The Contract Documents are modified as follows upon execution of this Change Order:

DESCRIPTION:
Per email from West Construction (Bryce Erickson) on 9/22/09, they can offer the following credits:

1. Credit of $800 associated with the electrical work deductions identified in DCVR 002.

ATTACHMENTS: Referenced Email from West.

CHANGE IN CONTRACT PRICE:	CHANGE IN CONTRACT TIME:
Original Contract Price: $1,696,985.00	Original Contract Times: ☐ WORKING DAYS ☐ CALENDAR DAYS Substantial Completion Date (days/date): 0 Ready for Final Payment Date (days/date): 0
☐ DECREASE ☑ INCREASE from previously approved Change Order No. 0 to No. 2 $58,750.00	☐ DECREASE ☐ INCREASE from previously approved Change Order No. __ to No. ____ Substantial Completion Date (days): Ready for Final Payment Date (days):
Contract Price prior to this Change Order: $1,755,735.00	Contract Times prior to this Change Order: Substantial Completion Date (days/date): 0 Ready for Final Payment Date (days/date): 0
☑ DECREASE ☐ INCREASE of this Change Order: -$800.00	☐ DECREASE ☐ INCREASE of this Change Order: Substantial Completion Date (days/date): 0 Ready for Final Payment Date (days/date): 0
Contract Price Incorporating this Change Order: $1,754,935.00	Contract Times with all approved Change Orders: Substantial Completion Date (days/date): 0 Ready for Final Payment Date (days/date): 0

RECOMMENDED:	ACCEPTED:	ACCEPTED:
By: [signature]	By: Rick Berg	By: [signature]
Engineer (Authorized Signature)	Owner (Authorized Signature)	Contractor (Authorized Signature)
Date: 9/22/2009	Date: 10/15/2009	Date: 10/15/09

"Paul Johnson" <Paul@bwcc.us>
09/22/2009 12:05 PM

To <Kimberly_Nielsen@URSCorp.com>
cc "Cynthia R. Berns" <cberns@oldharbor.org>
bcc
Subject

This in acknowledgement of DCVR-002 from URS. Your response was transmitted to our low bid electrical sub-contractor. He has revised his low quote and we have an $800.00 reduction in the electrical bid item 23. It's always a pleasure to give back money.

Paul S Johnson
Project Manager

West Construction Company, Inc.

Anchorage: *6120 A Street Anchorage, AK 99518*
phone (907)561-9811 fax (907)561-9844 cell (907) 632-3331

Dutch Harbor: *PO Box 920145 Dutch Harbor, AK 99692*
phone (907)581-5766 fax (907) 581-5765 cell (907) 359-1228

www.bwcc.us

URS

CHANGE ORDER NO. 4

PROJECT: Old Harbor Small Boat Harbor Replacement **PROJECT #:** 26220230.09001

CONTRACTOR: West Construction

The Contract Documents are modified as follows upon execution of this Change Order:

DESCRIPTION:
Revised Boarding Float, in accordance with attached drawings by URS and attached revised Alternative C quote prepared by West. The City would like to proceed with West's sheetpile abutment alternative, in lieu of the concrete abutment specified in the attached drawings. In addition, the City has requested (and quote indicates) that no ladders, fire extinguishers, or life rings be installed on this float.

ATTACHMENTS: Quote and Boarding Float drawings

CHANGE IN CONTRACT PRICE:

Original Contract Price:
$1,696,985.00

☐ DECREASE ☑ INCREASE from previously approved
Change Order No. 0 to No. 3
$57,950.00

Contract Price prior to this Change Order:
$1,754,935.00

☐ DECREASE ☑ INCREASE of this Change Order:
$15,864.00

Contract Price Incorporating this Change Order:
$1,770,799.00

CHANGE IN CONTRACT TIME:

Original Contract Times: ☐ WORKING DAYS ☐ CALENDAR DAYS
Substantial Completion Date (days/date): 0
Ready for Final Payment Date (days/date): 0

☐ DECREASE ☐ INCREASE from previously approved
Change Order No. __ to No. ____
Substantial Completion Date (days): ____
Ready for Final Payment Date (days): ____

Contract Times prior to this Change Order:
Substantial Completion Date (days/date): 0
Ready for Final Payment Date (days/date): 0

☐ DECREASE ☐ INCREASE of this Change Order:
Substantial Completion Date (days/date): 0
Ready for Final Payment Date (days/date): 0

Contract Times with all approved Change Orders:
Substantial Completion Date (days/date): 0
Ready for Final Payment Date (days/date): 0

RECOMMENDED:
By: [signature]
Engineer (Authorized Signature)
Date: 10/15/2009

ACCEPTED:
By: [signature]
Owner (Authorized Signature)
Date: 10/15/2009

ACCEPTED:
By: [signature]
Contractor (Authorized Signature)
Date: 10/15/09

	OLD HARBOR ALTERNATE C REVISED		10/14/2009	
BID				
ITEM	DESCRIPTION	original Bid	Revised Bid	
26	Furnish/Install 8' wide floats	$ 51,136.00	$ 67,000.00	includes 3 in rub strips
27	Furnish 16 in. Galv Piling	$ 14,259.00	$ 14,259.00	on fingers.
28	Drive 16 in Galv. Piling	$ 6,300.00	$ 6,300.00	
29	130 lb anodes	$ 3,000.00	$ 3,000.00	
30	life ring enclosures etc	$ 1,500.00		
31	fire extinguishers/cabinet	$ 1,600.00		
32	ladders	$ 1,400.00		
		$ 79,195.00	**$ 90,559.00**	
	revised float quote			
	Total Revised ALT "C"	$ 79,195.00	$ 90,559.00	w/o items 30, 31, 32
	ABUTMENT ALTERNATIVES: ADD			
	~~New sheets (coated)fob site)~~		~~$ 8,389.00~~	
	West New sheets			
	uncoated (fob)		$ 4,500.00	plus this abutment
	~~Concrete/rebar/in place~~		~~$ 10,500.00~~	
	Total:	$ 79,195.00	**$ 95,059.00**	
	Change Order Amount:		**$ 15,864.00**	

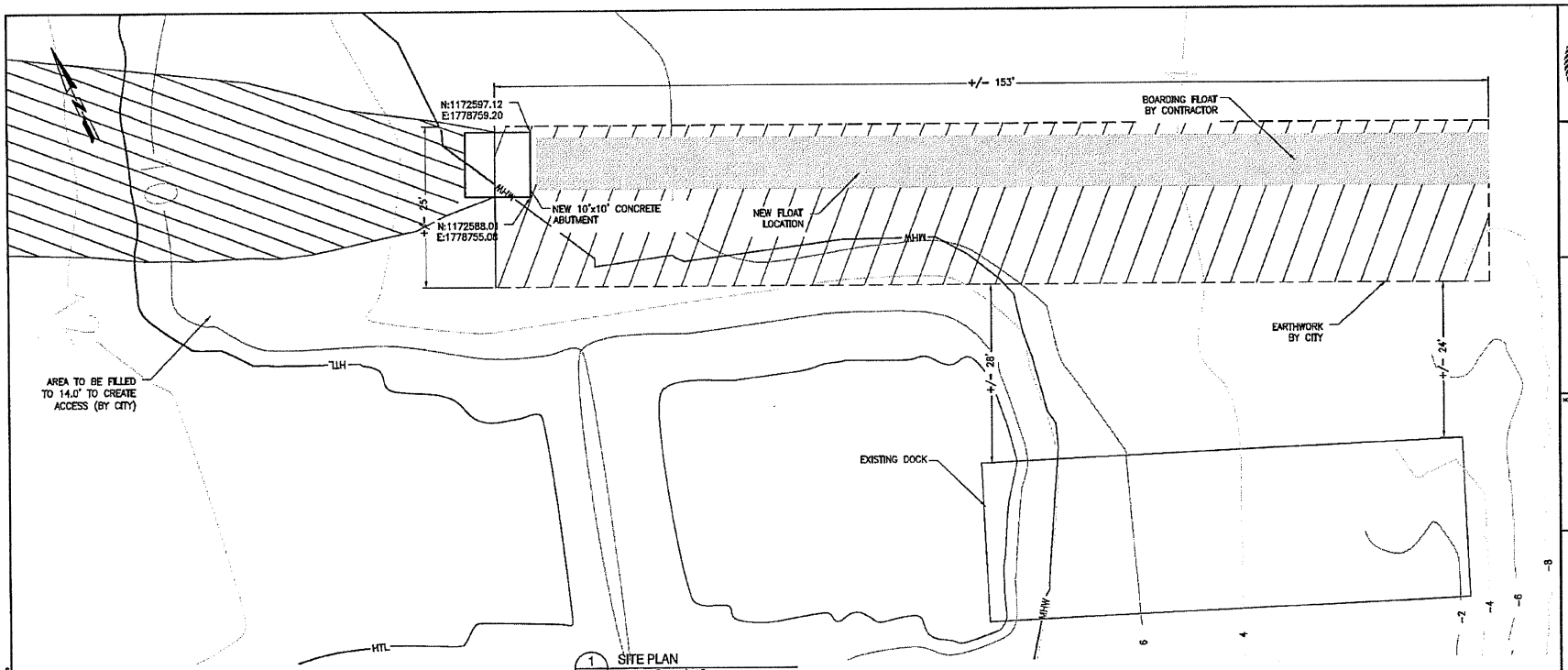

1 SITE PLAN
C04.1 SCALE: 1" = 8'-0"

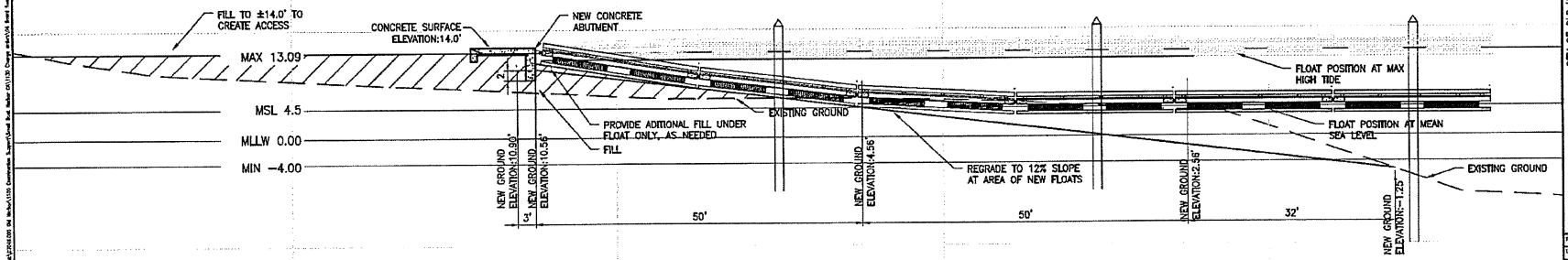

2 PROFILE
C04.1 SCALE: 1" = 8'-0"

NOTE:
ALL GRADING AND DREDGING WORK DEPICTED ON THIS SHEET TO BE COMPLETED BY THE CITY OF OLD HARBOR. FLOAT FABRICATION AND INSTALLATION TO BE COMPLETED BY THE CONTRACTOR

STATE OF ALASKA 49TH
Kimberly Nielsen No. CE 11142
REGISTERED PROFESSIONAL ENGINEER

URS
ENGINEERING/SURVEYING & LANDSCAPE ARCHITECTURE
911 W. 6TH AVENUE, SUITE 300
ANCHORAGE, AK 99501
TEL: (907) 272-4540 • FAX: (907) 276-7979

NOTES / REVISIONS:

CITY OF OLD HARBOR
SMALL BOAT HARBOR

SMALL BOAT HARBOR REPLACEMENT

OLD HARBOR, ALASKA

CHANGE ORDER 3
PLAN AND PROFILE

PROJECT No: 07046.000
DATE: 10/15/09
DESIGNED: K.N.
DRAWN BY: CB
CHECKED BY:
SHEET: C04.1
PAGE: 1 OF 4

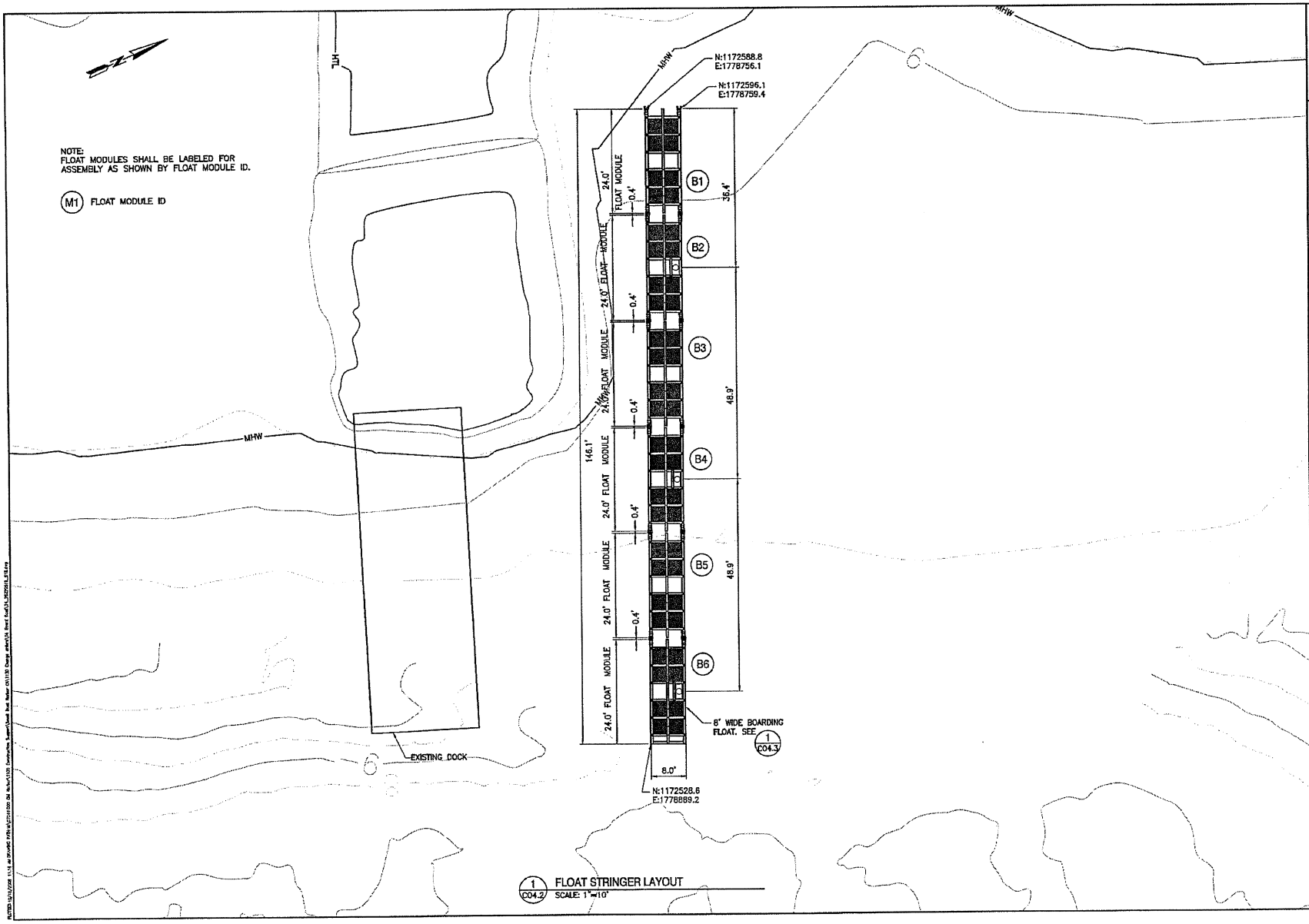

1 C04.2 FLOAT STRINGER LAYOUT
SCALE: 1"=10'

STATE OF ALASKA 49TH Kimberly Nielsen No. CE 11142 REGISTERED PROFESSIONAL ENGINEER

URS
ENGINEERING/SURVEYING & LANDSCAPE ARCHITECTURE
911 W. 8TH AVENUE, SUITE 300
ANCHORAGE, AK 99501
TEL (907) 279-4543 • FAX (907) 279-7979

NOTES / REVISIONS:

CITY OF OLD HARBOR
SMALL BOAT HARBOR

SMALL BOAT HARBOR REPLACEMENT
OLD HARBOR, ALASKA

CHANGE ORDER 3
BOARDING FLOAT STRINGER LAYOUT

PROJECT No:	07046.000
DATE:	10/15/2009
DESIGNED:	KN
DRAWN BY:	CB
CHECKED BY:	JD
SHEET:	CO4.2
PAGE:	2 OF 4

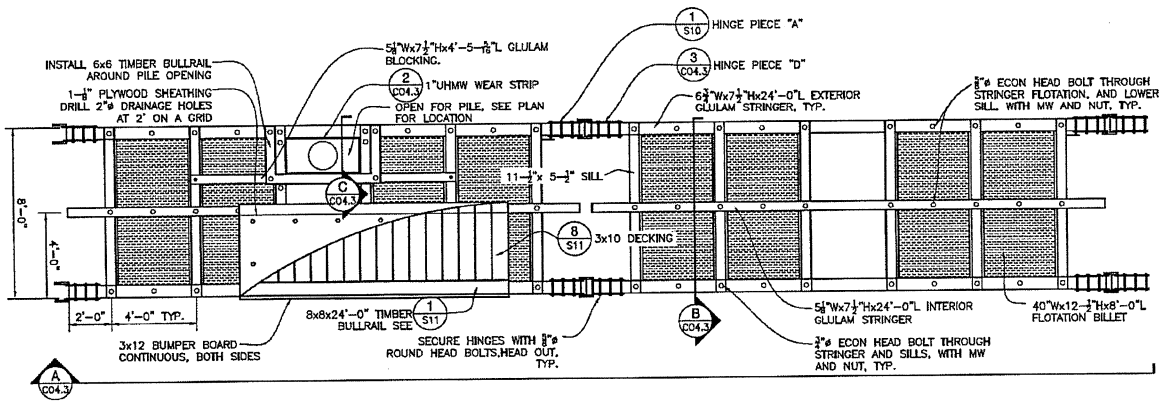

1 C04.3 BOARDING FLOAT PLAN
SCALE: 3/8" = 1'-0"

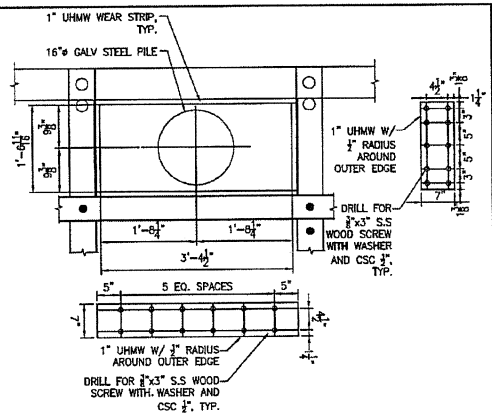

2 C04.3 UHMW WEAR STRIP DETAIL
SCALE: 1" = 1'-0"

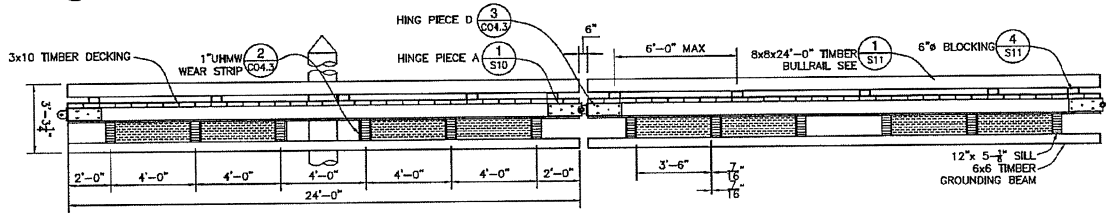

A C04.3 BOARDING FLOAT ELEVATION
SCALE: 3/8" = 1'-0"

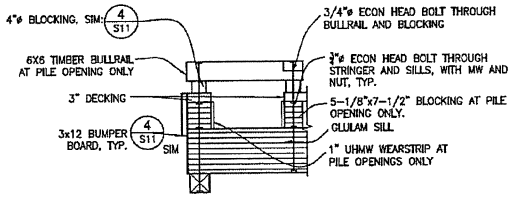

C C04.3 BOARDING FLOAT END SECTION
SCALE: 3/8" = 1'-0"

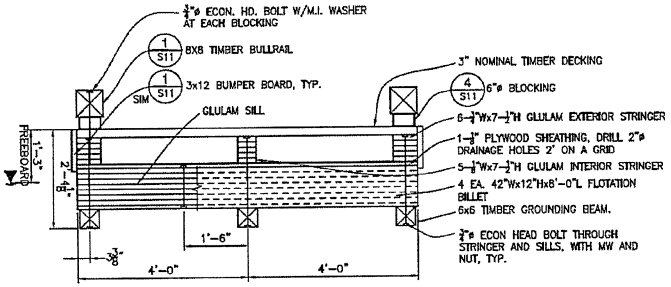

B C04.3 BOARDING FLOAT END SECTION
SCALE: 3/8" = 1'-0"

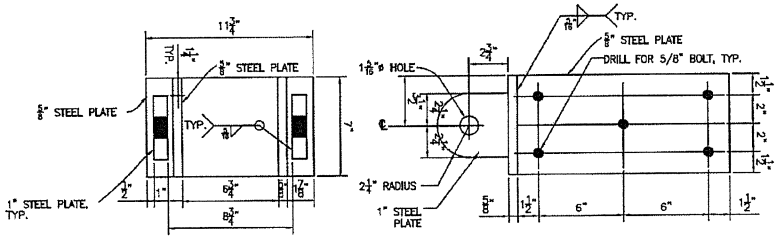

3 C04.3 HINGE PIECE D
SCALE: 3" = 1'-0"

NOTES:

1 ALL STEEL FABRICATIONS SHALL BE HOT DIP GALVANIZED AFTER FABRICATION.

2 REFER TO "BID" PLAN SET FOR ALL OFF SHEET DETAIL CALL OUTS.

STATE OF ALASKA 49TH
Kimberly Nielsen No. CE 11142
PROFESSIONAL ENGINEER

URS
ENGINEERING/SURVEYING & LANDSCAPE ARCHITECTURE
911 W. 8TH AVENUE, SUITE 300 ANCHORAGE, AK 99501
TEL (907) 274-2514 FAX (907) 274-2379

NOTES / REVISIONS:

CITY OF OLD HARBOR
SMALL BOAT HARBOR

SMALL BOAT HARBOR REPLACEMENT
OLD HARBOR, ALASKA

CHANGE ORDER 3
8' WIDE BOADING FLOAT

PROJECT No: 07046.000
DATE: 10/15/2009
DESIGNED: K.N.
DRAWN BY: CB
CHECKED BY: J.D.
SHEET: C04.3
PAGE: 3 OF 4

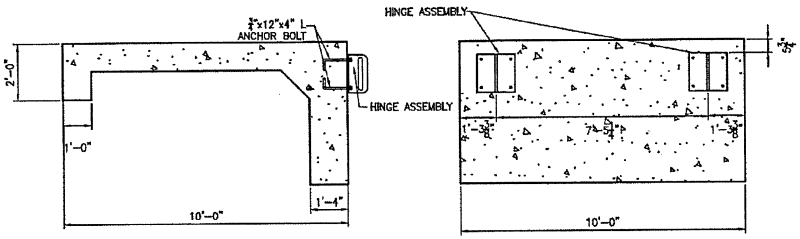

1 CO4.4 CONCRETE FOOTING DETAIL
SCALE: 1/2" = 1'-0"

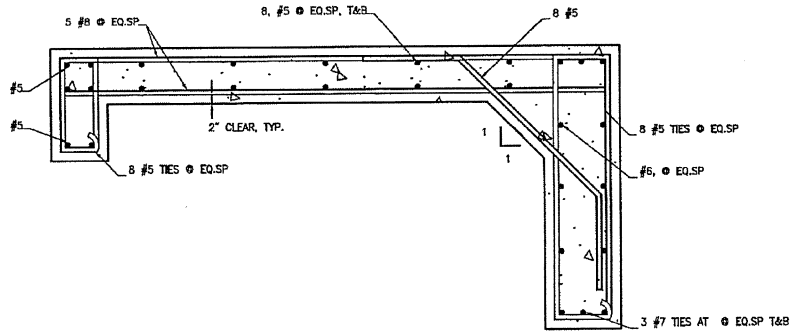

2 CO4.4 CONCRETE FOOTING REINFORCING DETAIL
SCALE: 1" = 1'-0"

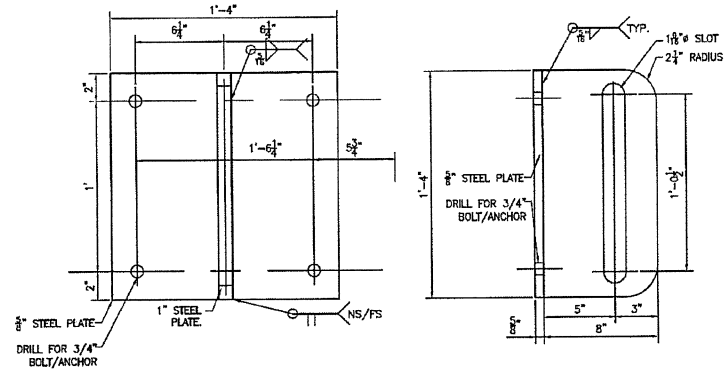

3 CO4.4 ABUTMENT HINGE DETAIL (2 REQUIRED)
SCALE: 3" = 1'-0"

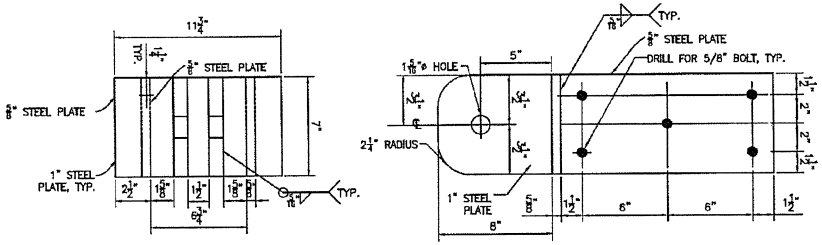

4 CO4.4 FLOAT TO ABUTMENT HINGE DETAIL (2 REQUIRED)
SCALE: 3" = 1'-0"

NOTES:

1 ALL STEEL FABRICATIONS SHALL BE HOT DIP GALVANIZED AFTER FABRICATION.

STATE OF ALASKA 49TH Kimberly Nielsen No. CE 11142 REGISTERED PROFESSIONAL ENGINEER

URS ENGINEERING/SURVEYING & LANDSCAPE ARCHITECTURE
911 W. 6TH AVENUE, SUITE 300
ANCHORAGE, AK 99501
TEL: (907) 279-0541 • FAX: (907) 279-2979

NOTES / REVISIONS:

CITY OF OLD HARBOR
SMALL BOAT HARBOR

SMALL BOAT HARBOR REPLACEMENT
OLD HARBOR, ALASKA

CHANGE ORDER 3
ABUTMENT DETAILS

PROJECT No.	07046.000
DATE:	10/15/2009
DESIGNED:	K.N.
DRAWN BY:	CB
CHECKED BY:	J.D.
SHEET:	CO4.4
PAGE:	4 OF 4