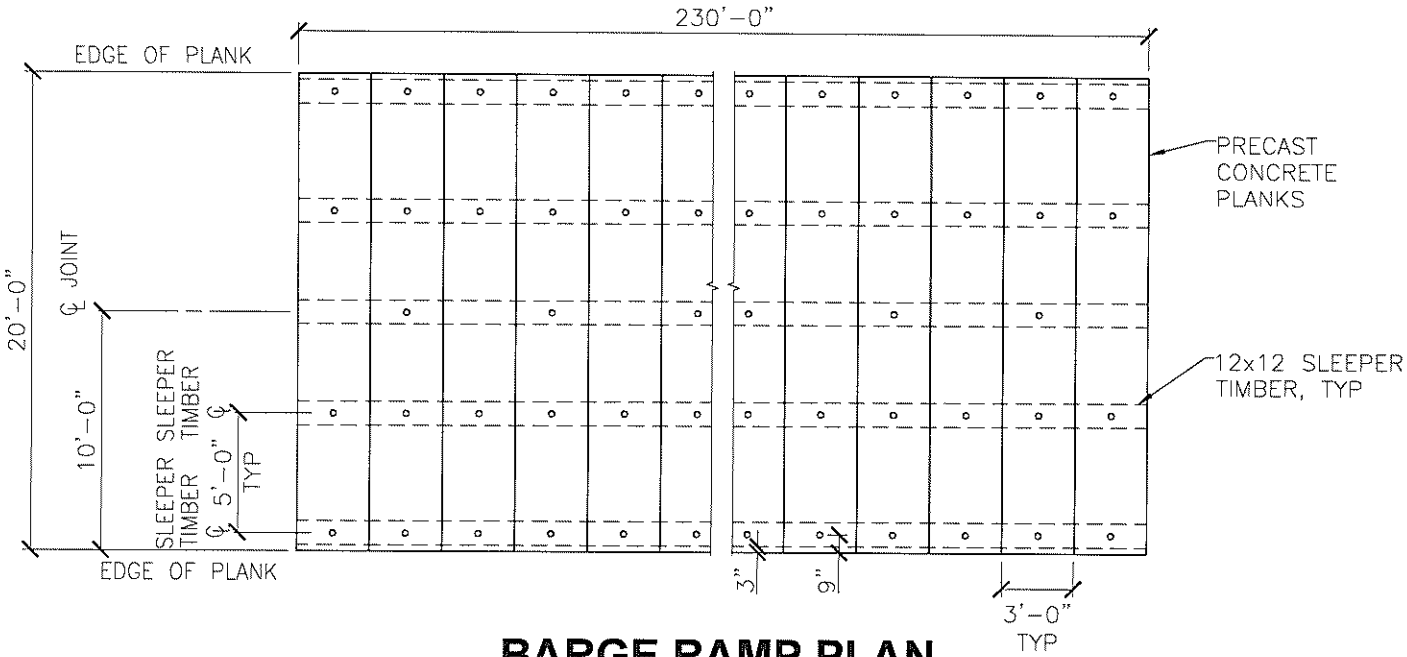

BARGE RAMP PLAN

NTS

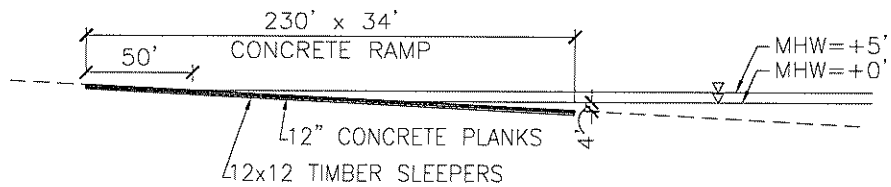

ELEVATION

NTS

PND Engineers, Inc. is not responsible for safety programs, methods or procedures of operation, or the construction of the design shown on these drawings. Where specifications are general or not called out, the specifications shall conform to standards of industry. Drawings are for use on this project only and are not intended for reuse without written approval from PND. Drawings are also not to be used in any manner that would constitute a detriment directly or indirectly to PND.

REV	DATE	DESCRIPTION

DATE:

1506 West 36th Avenue
Anchorage, Alaska 99503
Phone: 907.561.1011
Fax: 907.563.4220
www.pndengineers.com

PND ENGINEERS, INC.

PROJECT: LAKE ILIAMNA MULTIPLE COMMUNITY BARGE LANDING DESIGN PROJECT

TITLE: BARGE RAMP DETAILS

DESIGNED BY:	PK	DATE:	12/24/08
CHECKED BY:	XXX	PROJECT NO:	081090

SHEET NO. 14 OF 17

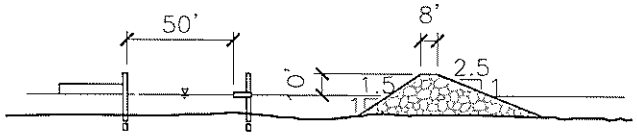

SECTION A-A

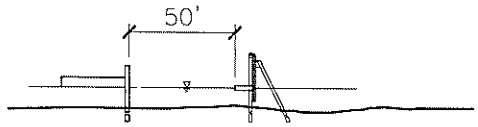

SECTION B-B

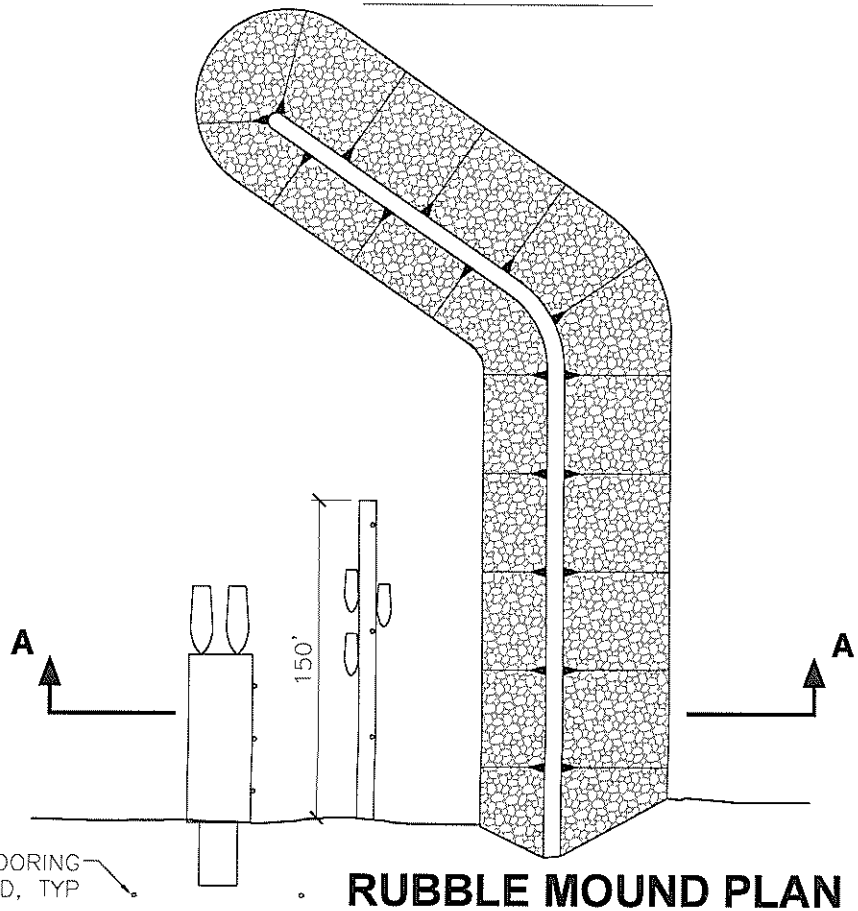

RUBBLE MOUND PLAN

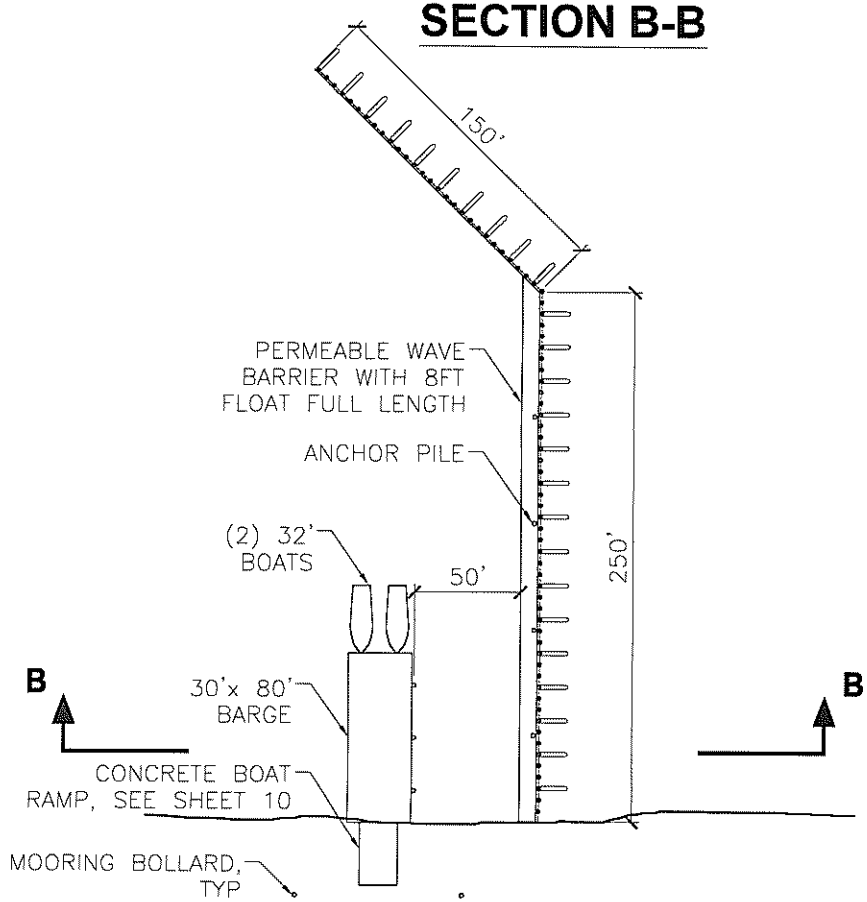

PERMEABLE WAVE BARRIER PLAN

PND Engineers, Inc. is not responsible for safety programs, methods or procedures of operation, or the construction of the design shown on these drawings. Where specifications are general or not called out, the specifications shall conform to standards of industry. Drawings are for use on this project only and are not intended for reuse without written approval from PND. Drawings are also not to be used in any manner that would constitute a detriment directly or indirectly to PND.

REV	DATE	DESCRIPTION

DATE: _____

1506 West 36th Avenue
Anchorage, Alaska 99503
Phone: 907.561.1011
Fax: 907.563.4220
www.pndengineers.com

PND ENGINEERS, INC.

PROJECT: LAKE ILIAMNA MULTIPLE COMMUNITY BARGE LANDING DESIGN PROJECT

TITLE: DETAILS

DESIGNED BY:	PK	DATE:	12/24/08
CHECKED BY:	XXX	PROJECT NO:	081090

SHEET NO. 15 OF 17

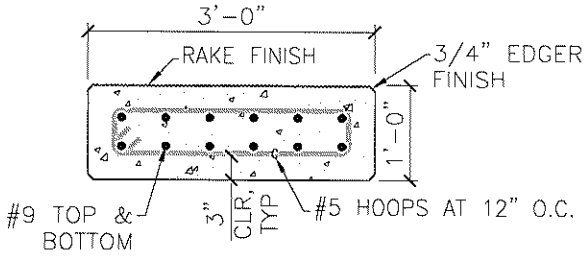

CONCRETE PLANK SECTION

NTS

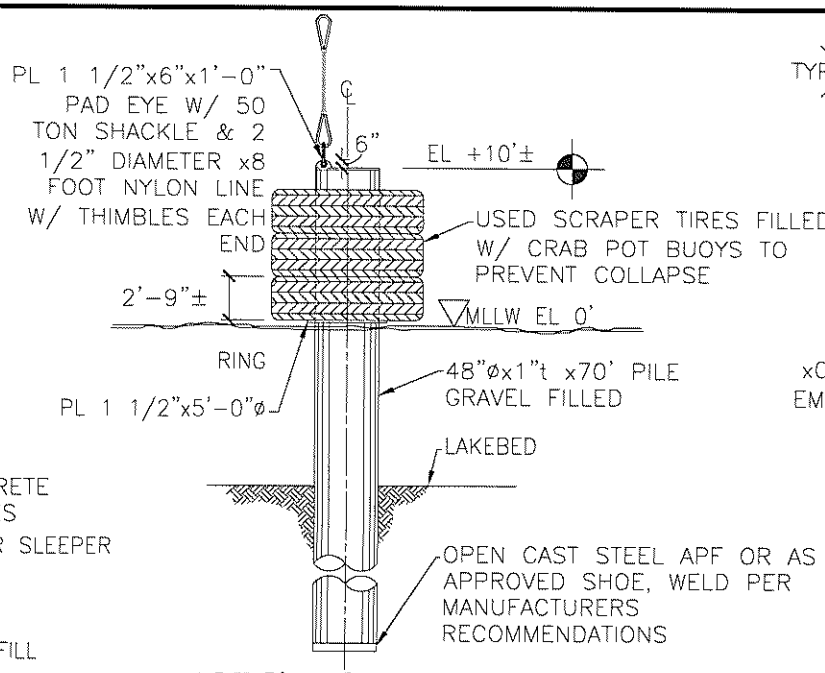

48"Ø DOLPHIN

NTS

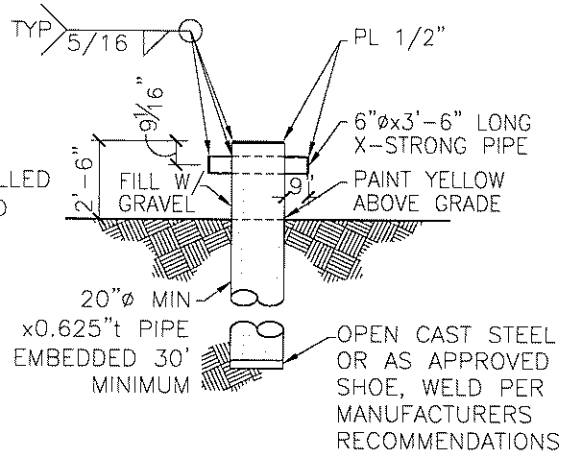

20"Ø MOORING BOLLARD

NTS

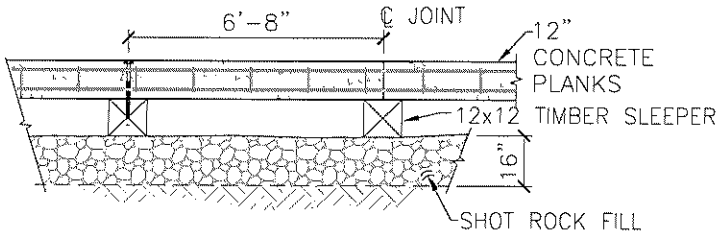

TYPICAL SECTION

NTS

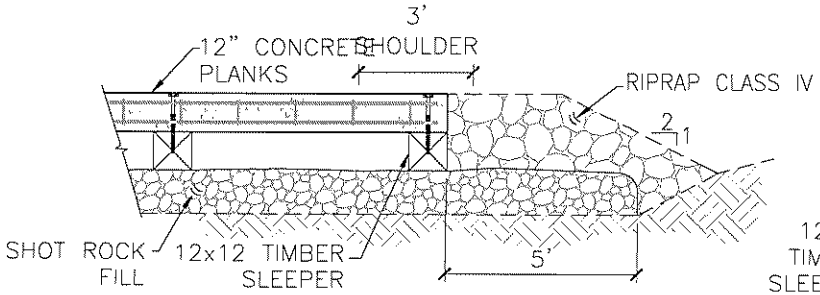

TYPICAL SHOULDER SECTION

NTS

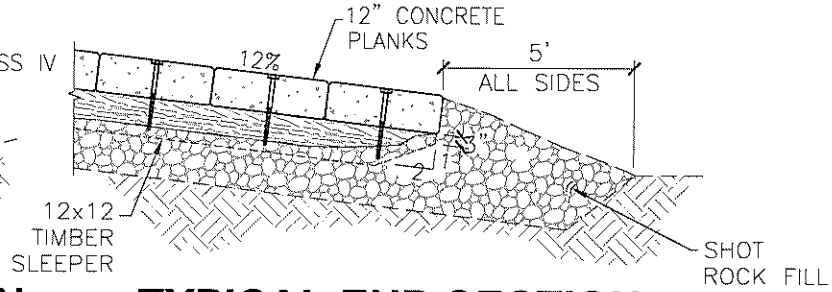

TYPICAL END SECTION

NTS

PND Engineers, Inc. is not responsible for safety programs, methods or procedures of operation, or the construction of the design shown on these drawings. Where specifications are general or not called out, the specifications shall conform to standards of industry. Drawings are for use on this project only and are not intended for reuse without written approval from PND. Drawings are also not to be used in any manner that would constitute a detriment directly or indirectly to PND.

REV	DATE	DESCRIPTION

DATE:

1506 West 36th Avenue
Anchorage, Alaska 99503
Phone: 907.561.1011
Fax: 907.563.4220
www.pndengineers.com

PND ENGINEERS, INC.

PROJECT: LAKE ILIAMNA MULTIPLE COMMUNITY BARGE LANDING DESIGN PROJECT

TITLE: DETAILS

DESIGNED BY: PK	DATE: 12/24/08	SHEET NO. 16 OF 17
CHECKED BY: XXX	PROJECT NO: 081090	

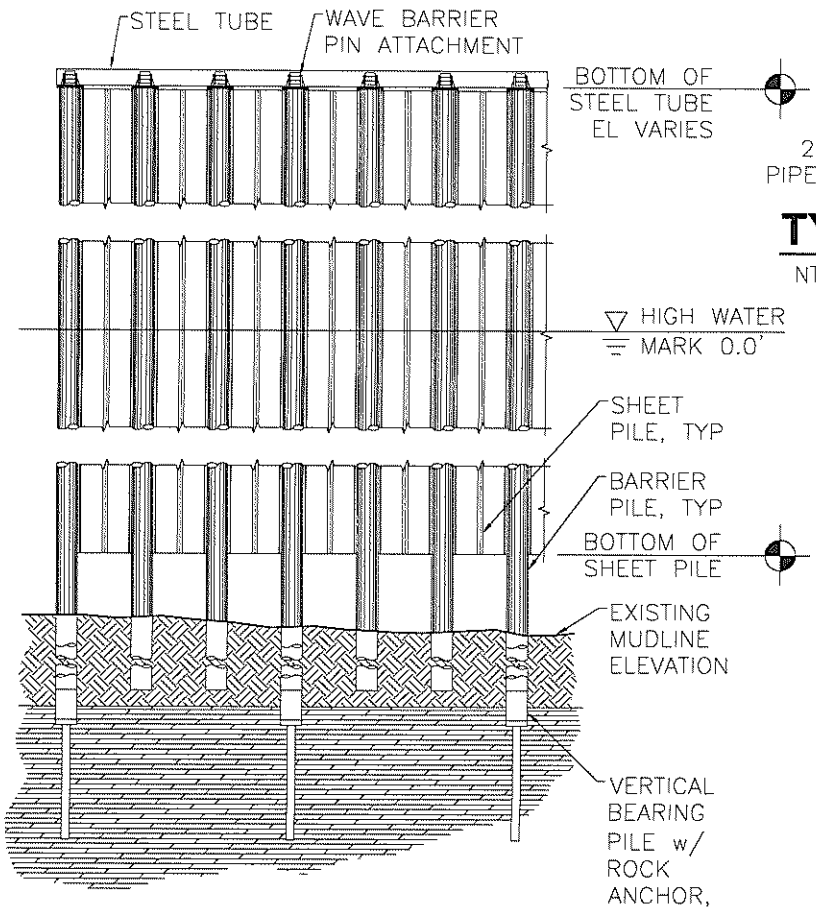

PARTIAL ELEVATION

NTS

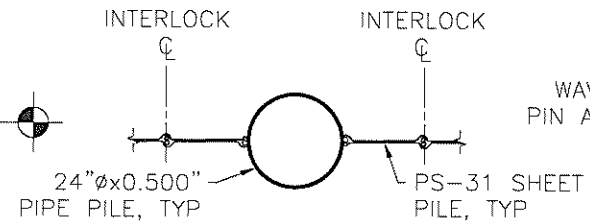

TYPICAL BARRIER PILE

NTS

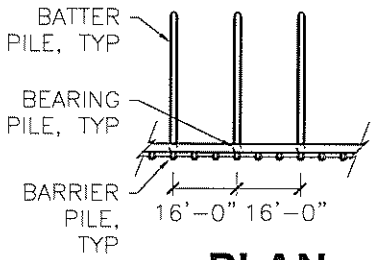

PLAN

NTS

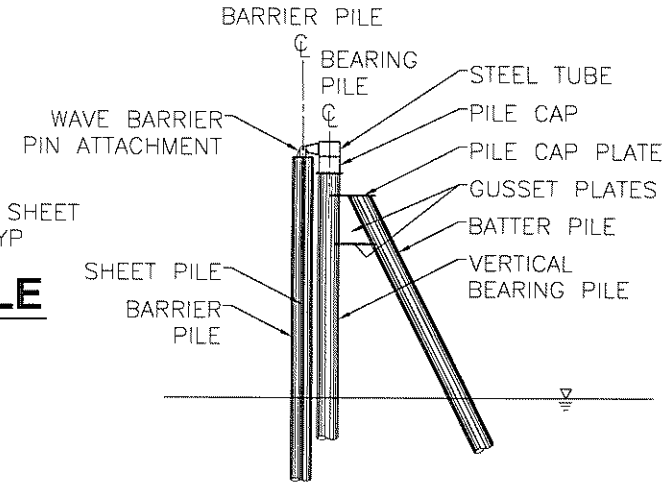

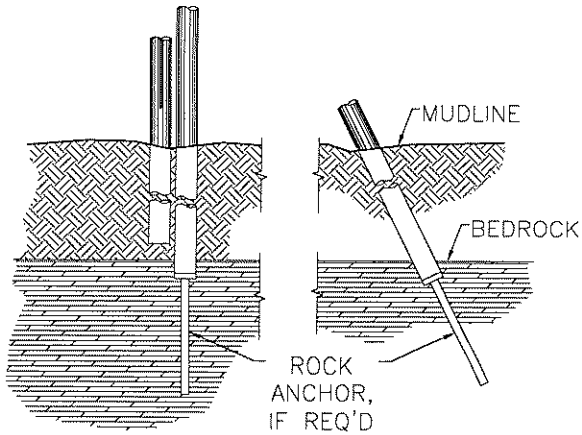

TYPICAL SECTION AT BATTER PILE

NTS

PND Engineers, Inc. is not responsible for safety programs, methods or procedures of operation, or the construction of the design shown on these drawings. Where specifications are general or not called out, the specifications shall conform to standards of industry. Drawings are for use on this project only and are not intended for reuse without written approval from PND. Drawings are also not to be used in any manner that would constitute a detriment directly or indirectly to PND.

REV	DATE	DESCRIPTION

DATE: _____

1506 West 36th Avenue
Anchorage, Alaska 99503
Phone: 907.561.1011
Fax: 907.563.4220
www.pndengineers.com

PND ENGINEERS, INC.

PROJECT: LAKE ILIAMNA MULTIPLE COMMUNITY BARGE LANDING DESIGN PROJECT

TITLE: WAVE BARRIER DETAILS

DESIGNED BY:	PK	DATE:	12/24/08
CHECKED BY:	XXX	PROJECT NO:	081090

SHEET NO. 17 OF 17