AMERICAN STEEL

APPROVED

By John Conway, CMG (Laptop) at 8:19 am, Jun 06, 2011

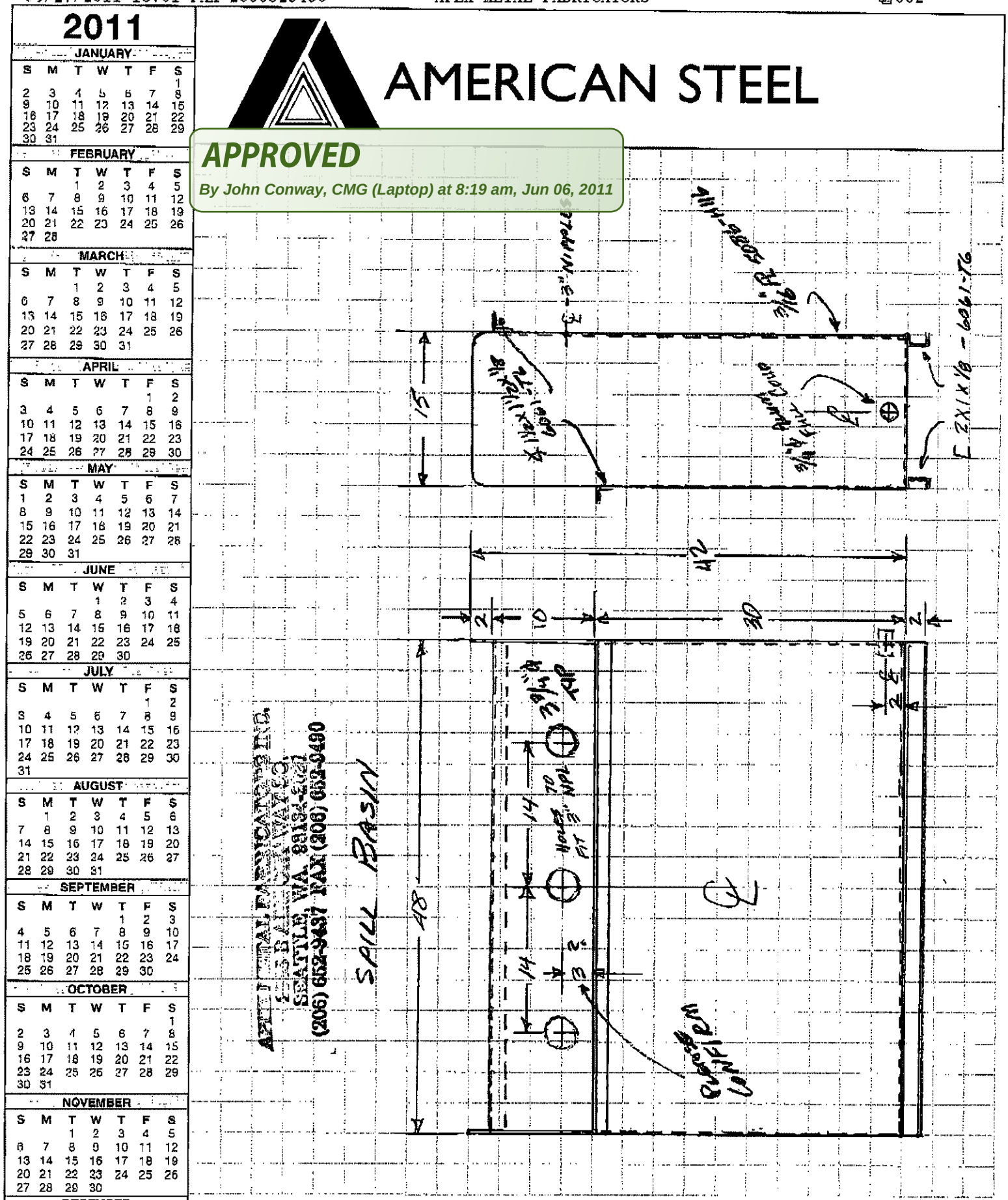

- Tubes
- Angles
- Flats
- Rounds
- Channels
- Plate
- Sheet
- Burning
- Cut to Length
- Shearing
- Sawing

AMERICAN STEEL
525 S. Sequoia Parkway, Canby, Oregon 97013
Phone: 503 651 6700 800 547 9032 Fax: 503 651 1525
19022 80th Avenue South, Kent, Washington 98032
Drafting E-mail: pdxdraft@american-steel.com

2011

JANUARY						
S	M	T	W	T	F	S
						1
2	3	4	5	6	7	8
9	10	11	12	13	14	15
16	17	18	19	20	21	22
23	24	25	26	27	28	29
30	31					

FEBRUARY						
S	M	T	W	T	F	S
		1	2	3	4	5
6	7	8	9	10	11	12
13	14	15	16	17	18	19
20	21	22	23	24	25	26
27	28					

MARCH						
S	M	T	W	T	F	S
		1	2	3	4	5
6	7	8	9	10	11	12
13	14	15	16	17	18	19
20	21	22	23	24	25	26
27	28	29	30	31		

APRIL						
S	M	T	W	T	F	S
					1	2
3	4	5	6	7	8	9
10	11	12	13	14	15	16
17	18	19	20	21	22	23
24	25	26	27	28	29	30

MAY						
S	M	T	W	T	F	S
1	2	3	4	5	6	7
8	9	10	11	12	13	14
15	16	17	18	19	20	21
22	23	24	25	26	27	28
29	30	31				

JUNE						
S	M	T	W	T	F	S
			1	2	3	4
5	6	7	8	9	10	11
12	13	14	15	16	17	18
19	20	21	22	23	24	25
26	27	28	29	30		

JULY						
S	M	T	W	T	F	S
					1	2
3	4	5	6	7	8	9
10	11	12	13	14	15	16
17	18	19	20	21	22	23
24	25	26	27	28	29	30
31						

AUGUST						
S	M	T	W	T	F	S
	1	2	3	4	5	6
7	8	9	10	11	12	13
14	15	16	17	18	19	20
21	22	23	24	25	26	27
28	29	30	31			

SEPTEMBER						
S	M	T	W	T	F	S
				1	2	3
4	5	6	7	8	9	10
11	12	13	14	15	16	17
18	19	20	21	22	23	24
25	26	27	28	29	30	

OCTOBER						
S	M	T	W	T	F	S
						1
2	3	4	5	6	7	8
9	10	11	12	13	14	15
16	17	18	19	20	21	22
23	24	25	26	27	28	29
30	31					

NOVEMBER						
S	M	T	W	T	F	S
		1	2	3	4	5
6	7	8	9	10	11	12
13	14	15	16	17	18	19
20	21	22	23	24	25	26
27	28	29	30			

DECEMBER						
S	M	T	W	T	F	S
				1	2	3
4	5	6	7	8	9	10
11	12	13	14	15	16	17
18	19	20	21	22	23	24
25	26	27	28	29	30	31

AMERICAN STEEL

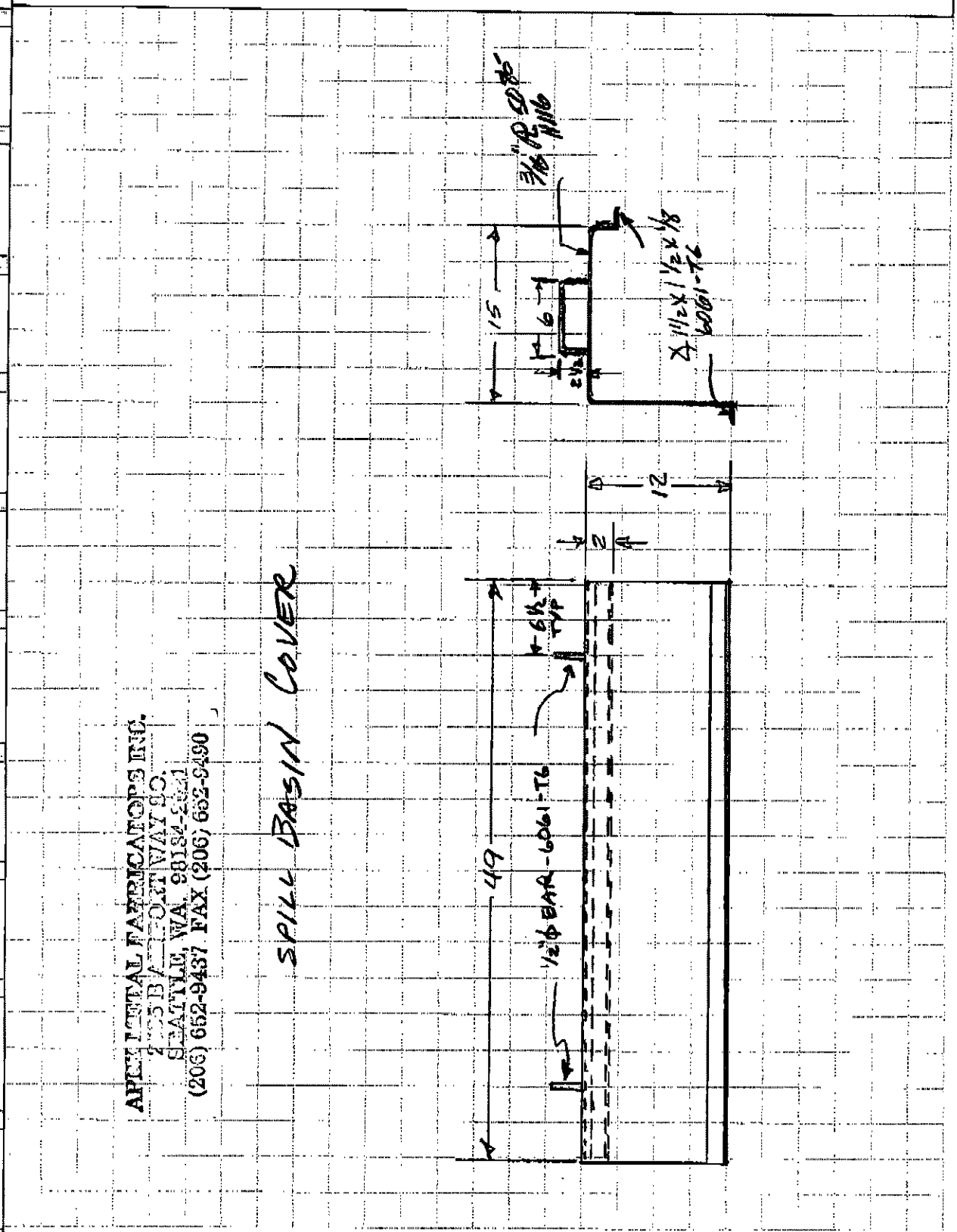

- Tubes
- Angles
- Flats
- Rounds
- Channels
- Plate
- Sheet
- Burning
- Cut to Length
- Shearing
- Sawing

AMERICAN STEEL
525 S. Sequoia Parkway, Canby, Oregon 97013
Phone: 503 651 6700 800 547 9032 Fax: 503 651 1525
19022 80th Avenue South, Kent, Washington 98032
Drafting E-mail: pdxdraft@american-steel.com

GENERAL NOTES FOR WELDED ALUMINUM SPILL BASIN FABRICATION

1) FABRICATE SPILL BASIN FROM ALUMINUM PLATE ASTM 5086-H116. ALL ALUMINUM SHAPES ASTM 6061-T6. MINIMIZE EXTERIOR SEAMS BY BENDING PLATE. SEAL WELD ALL EXTERIOR SEAMS.

2) PERFORM ALL WELDING IN ACCORDANCE WITH CURRENT AWS STANDARD CODE. MAKE ALL CONNECTIONS WITH CONTINUOUS BUTT OR FILLET WELDS. PROVIDE COMPLETE SEAL ON ALL TUBE JOINTS.

3) ALL HINGES, LATCHES, FASTENERS, AND HARDWARE TYPE 316 STAINLESS STEEL.

4) ROUND ALL CORNERS, SMOOTH ALL EDGES AND BUFF OUT ALL WELDS AFTER FABRICATION.

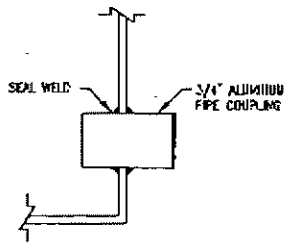

2 / M5 DRAIN FITTING
NO SCALE

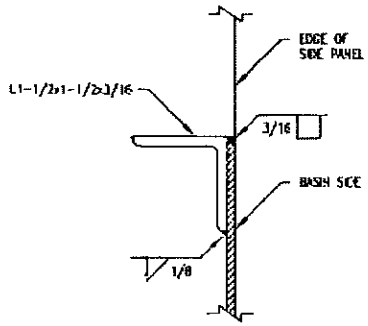

3 / M5 COVER SUPPORT ANGLE
NO SCALE

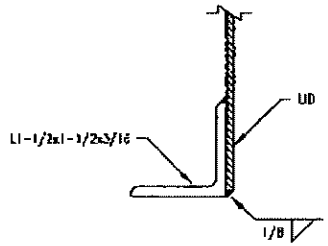

4 / M5 COVER EDGE ANGLE
NO SCALE