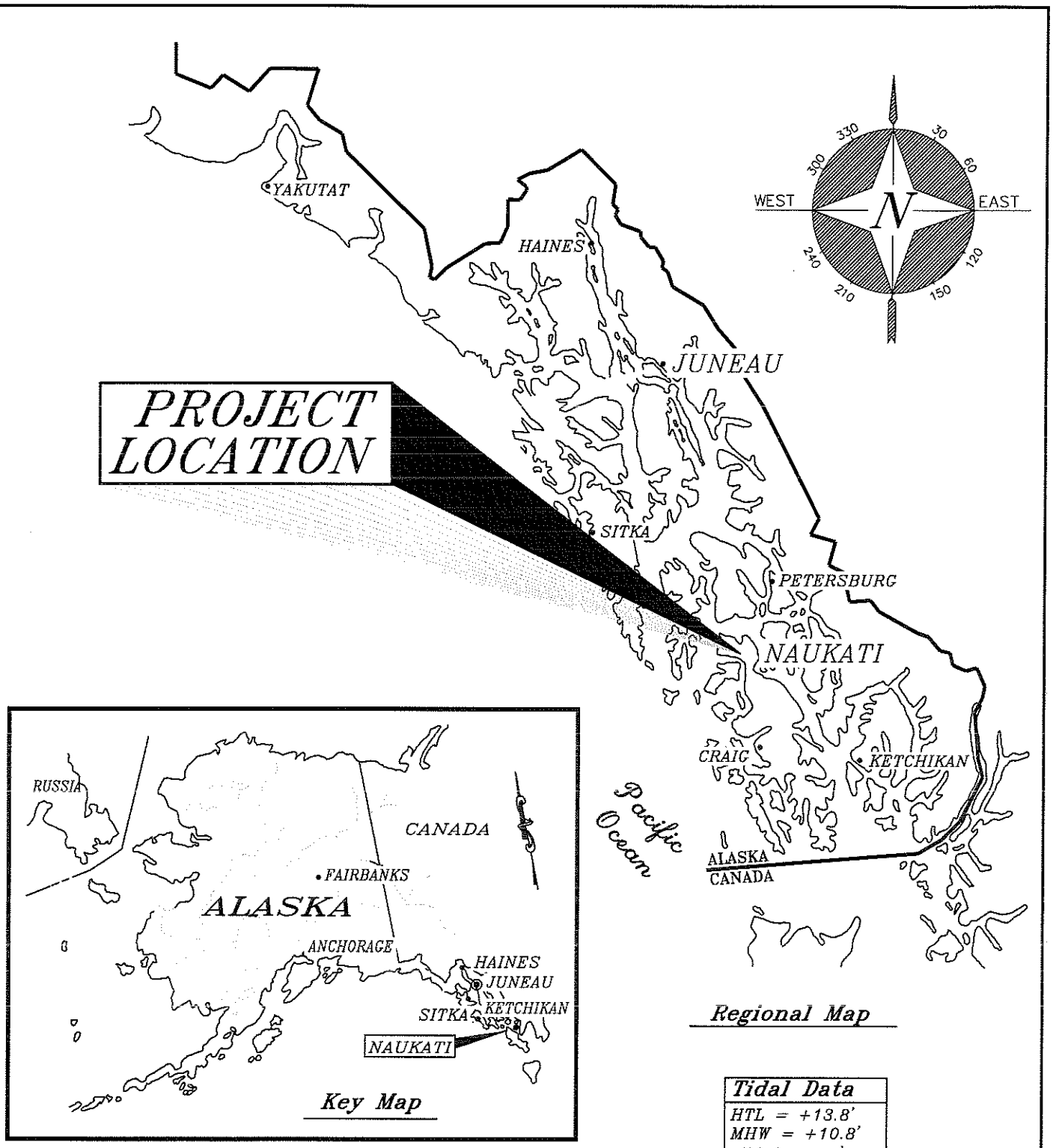

Tidal Data
HTL = +13.8'
MHW = +10.8'
MLLW = 0.0'
ELW = -3.5'

ADJACENT PROPERTY OWNERS:
State of Alaska
Department of Natural Resources

United States Forrest Service

WATER BODIES: Naukati Bay, Tuxekan Narrows

Key & Regional Maps

APPLICATION BY:
STATE OF ALASKA
DEPT. OF TRANSPORTATION & PUBLIC FACILITIES
SOUTHEAST REGION

Naukati Harbor Improvements

AT: Naukati Bay, Alaska
LOCATED IN: Township 69 South, Range 80 East, Section 19, CRM, Alaska

DATE: June, 2010 SHEET 1 OF 13

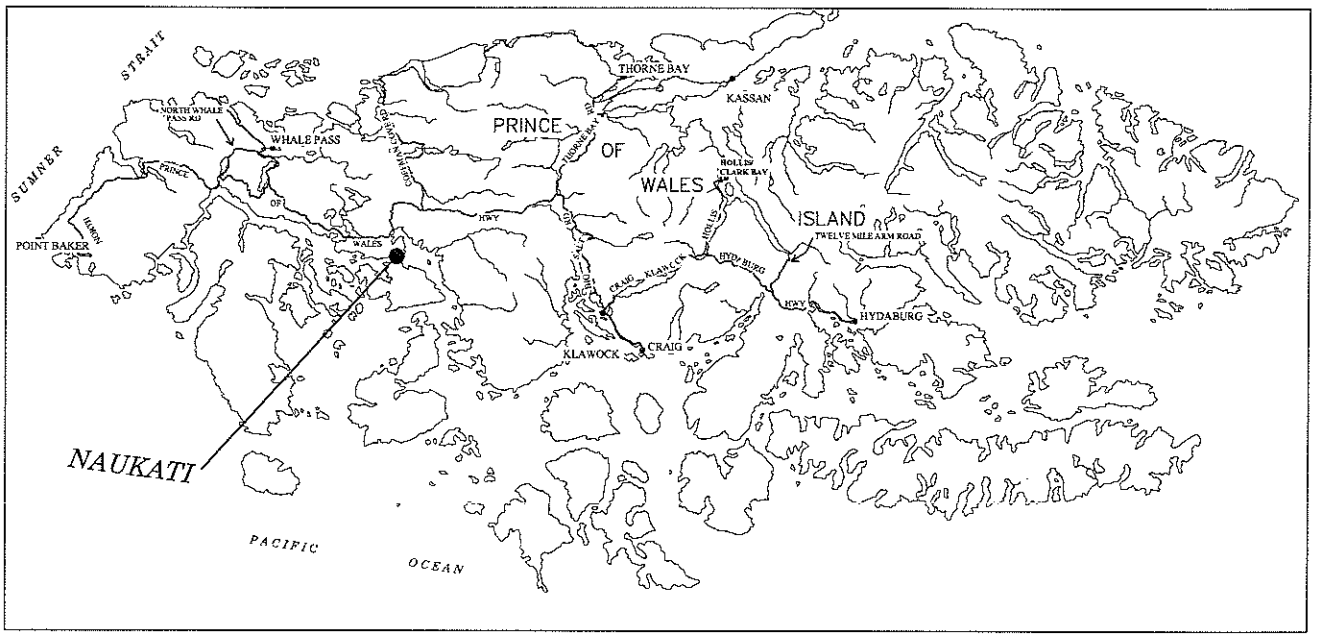

LOCATION MAP

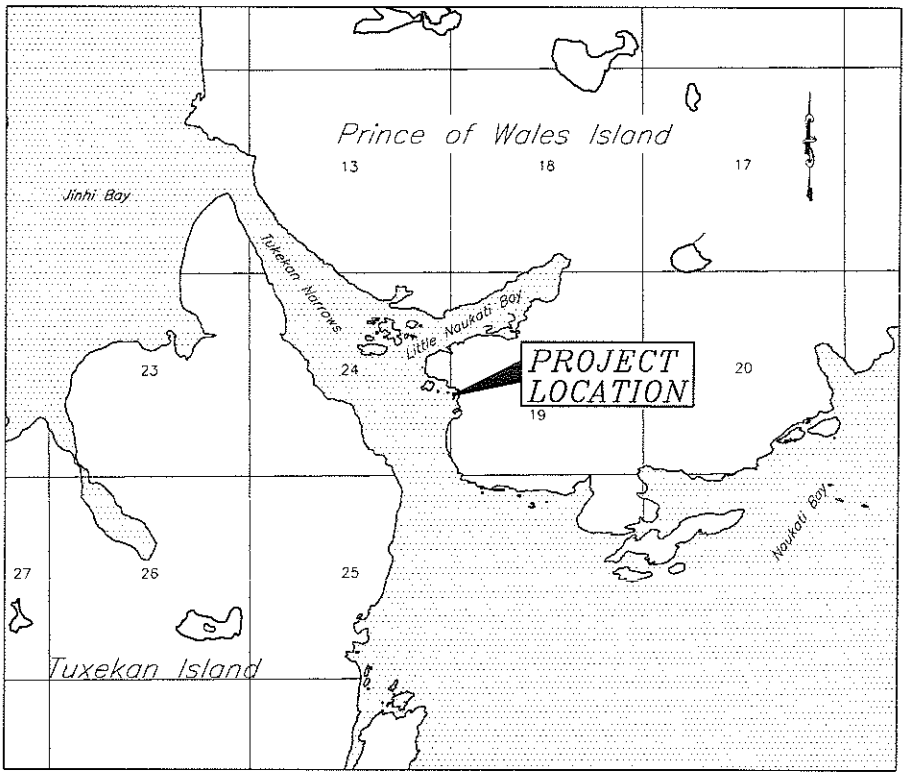

VICINITY MAP

ADJACENT PROPERTY OWNERS:
State of Alaska
Department of Natural Resources

United States Forrest Service

WATER BODIES: Naukati Bay, Tuxekan Narrows

Vicinity & Location Maps

APPLICATION BY:
STATE OF ALASKA
DEPT. OF TRANSPORTATION & PUBLIC FACILITIES
SOUTHEAST REGION

Naukati Harbor Improvements

AT: Naukati Bay, Alaska
LOCATED IN: Township 69 South,
Range 80 East
Section 19
CRM, Alaska

DATE: June, 2010 SHEET 2 OF 13

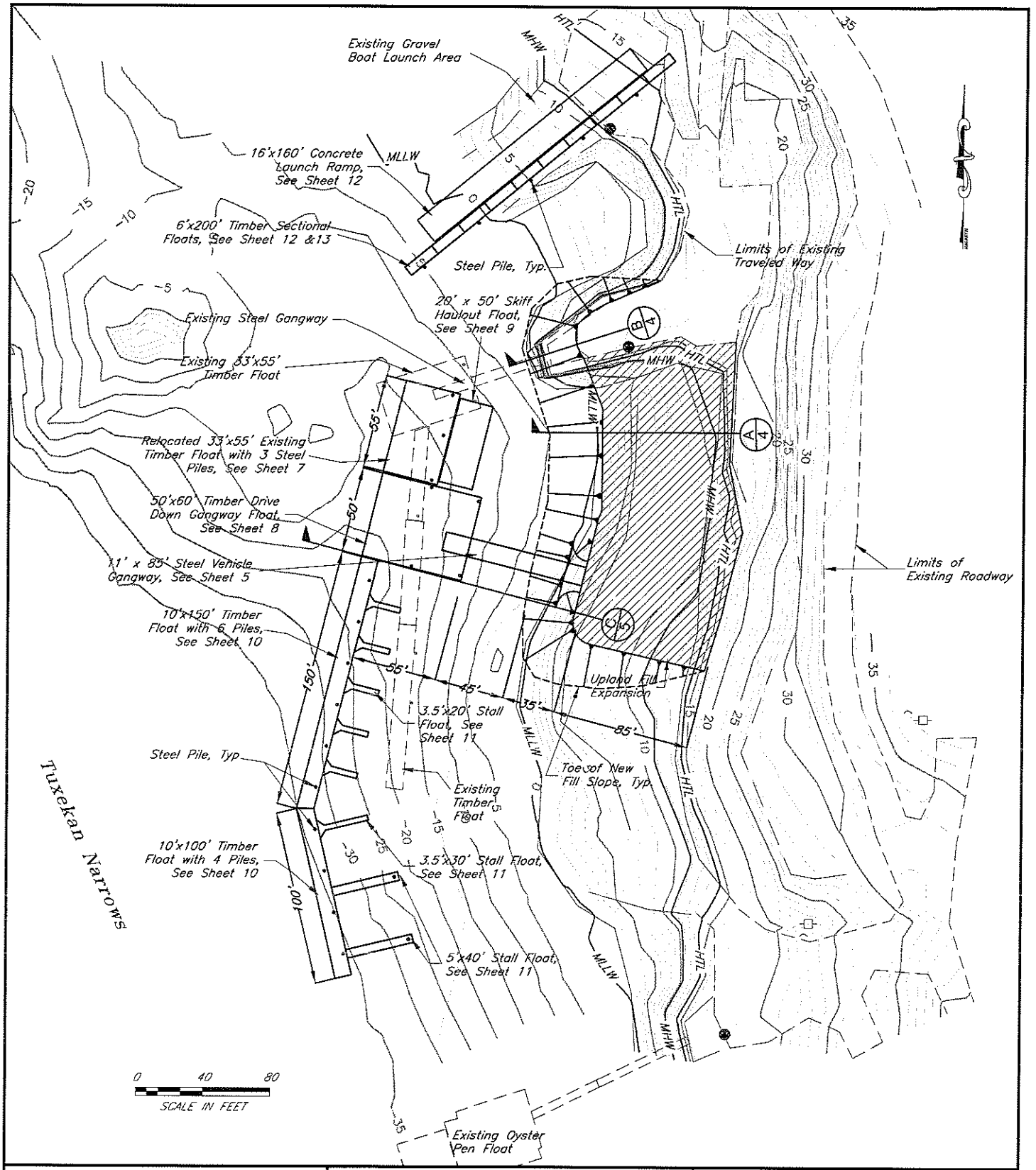

ADJACENT PROPERTY OWNERS:
State of Alaska
Department of Natural Resources

United States Forrest Service

WATER BODIES: Naukati Bay, Tuxekan Narrows

Harbor Site Plan

APPLICATION BY:
STATE OF ALASKA
DEPT. OF TRANSPORTATION & PUBLIC FACILITIES
SOUTHEAST REGION

Naukati Harbor Improvements

AT: Naukati Bay, Alaska
LOCATED IN: Township 69 South, Range 80 East, Section 19, CRM, Alaska

DATE: June, 2010 SHEET 3 OF 13

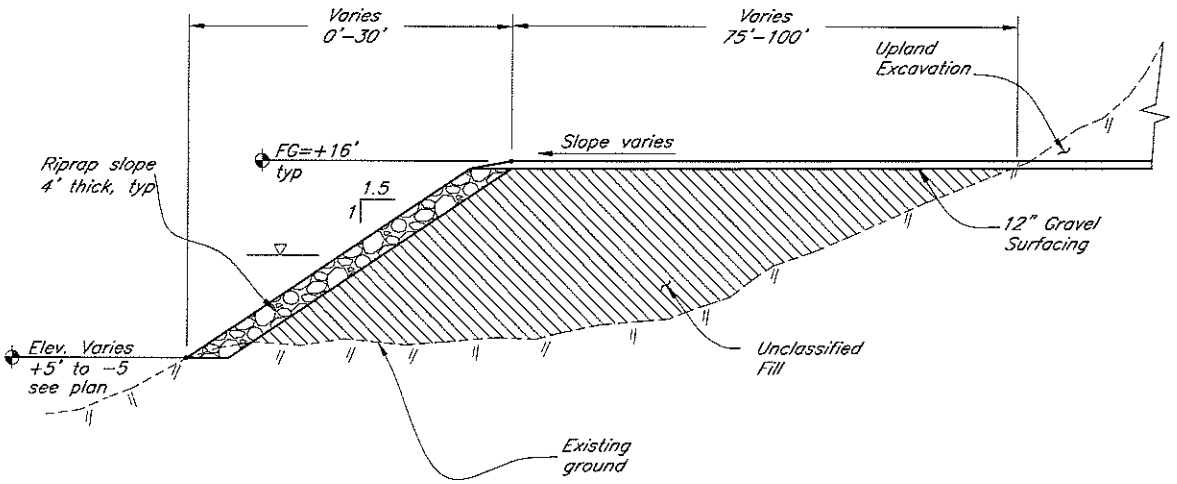

Typ Upland Fill Section (A/4)

NTS

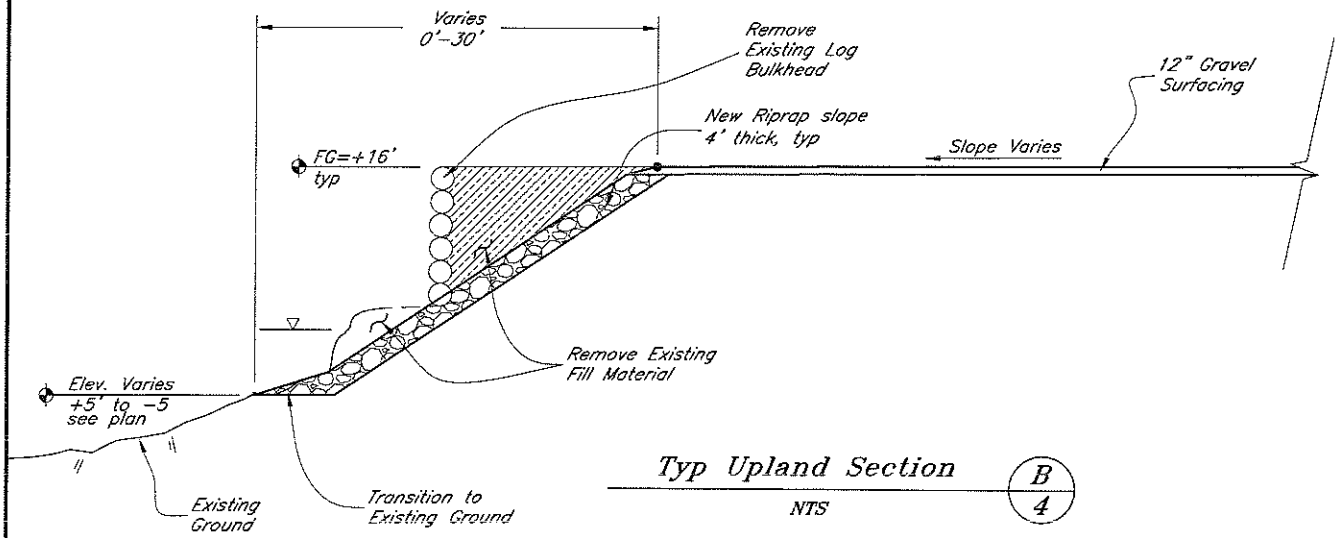

Typ Upland Section (B/4)

NTS

Tideland Fill Data

Total Fill Area below HTL=7000 CY

Total Fill Volume below HTL
(Embankment + Riprap=7250 CY

Total Riprap Volume below HTL=2250 CY

ADJACENT PROPERTY OWNERS:
State of Alaska
Department of Natural Resources

United States Forrest Service

WATER BODIES: Naukati Bay, Tuxekan Narrows

Typical Upland Fill & Excavation Section View

APPLICATION BY:
STATE OF ALASKA
DEPT. OF TRANSPORTATION & PUBLIC FACILITIES
SOUTHEAST REGION

Naukati Harbor Improvements

AT: Naukati Bay, Alaska
LOCATED IN: Township 69 South,
Range 80 East
Section 19
CRM, Alaska

DATE: June, 2010 SHEET 4 OF 13

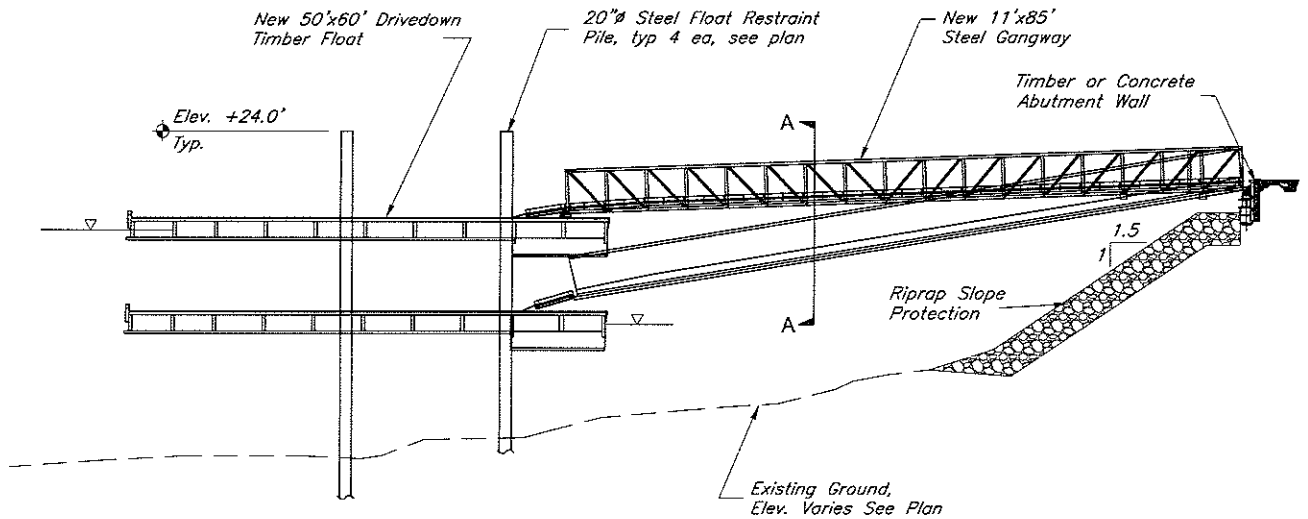

0 12.5 25
SCALE IN FEET

Typical Elevation
Gangway & Main Float
C
5

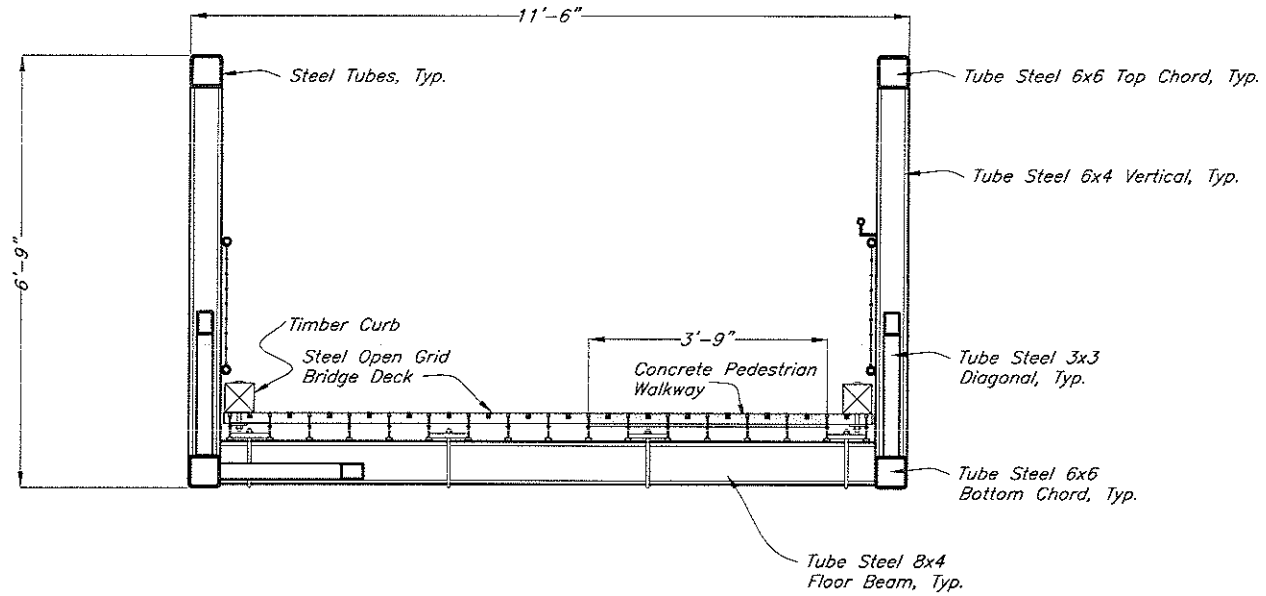

Section A-A
Steel Gangway
NTS

ADJACENT PROPERTY OWNERS:
State of Alaska
Department of Natural Resources

United States Forrest Service

WATER BODIES: Naukati Bay, Tuxekan Narrows

Gangway & Main Float
Typical Elevation
APPLICATION BY:
STATE OF ALASKA
DEPT. OF TRANSPORTATION & PUBLIC FACILITIES
SOUTHEAST REGION

Naukati Harbor Improvements
AT: Naukati Bay, Alaska
LOCATED IN: Township 69 South, Range 80 East, Section 19, CRM, Alaska
DATE: June, 2010 SHEET 5 OF 13

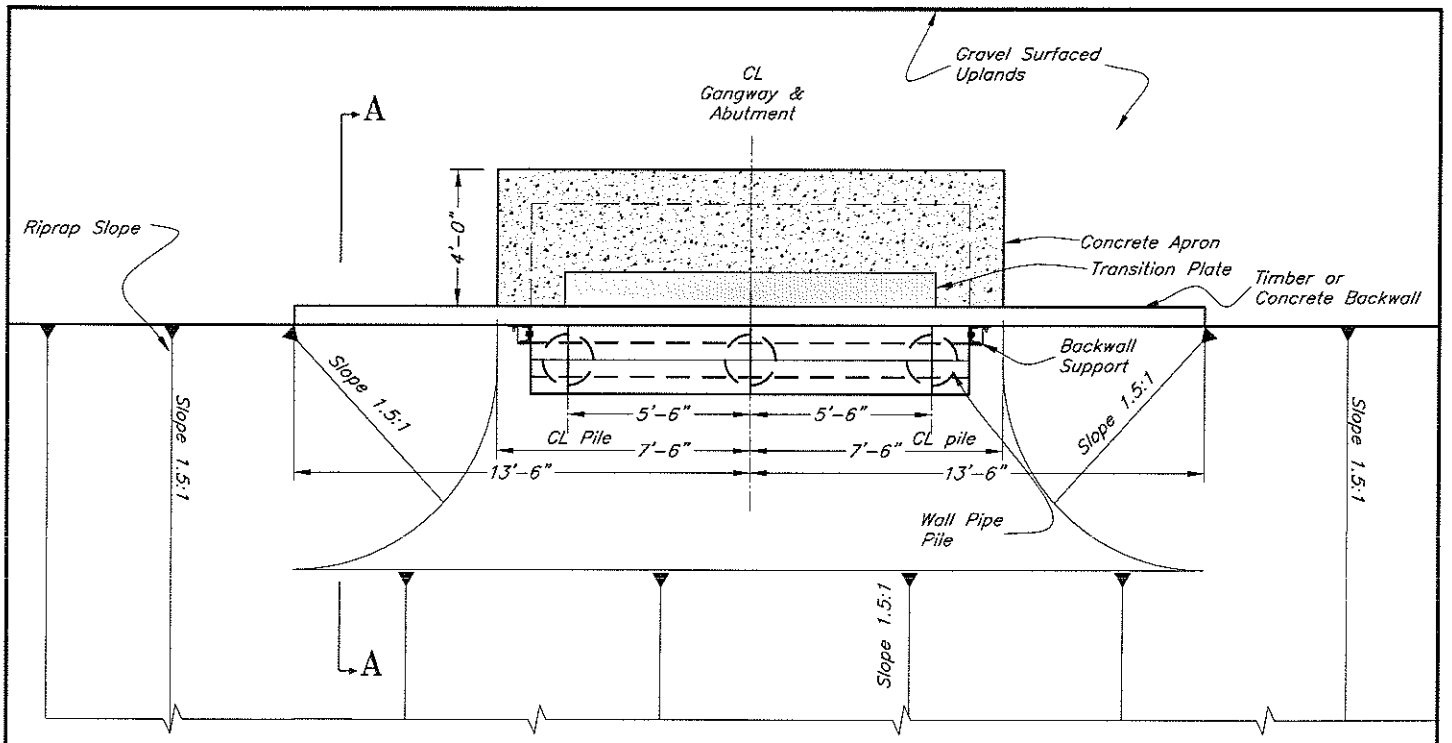

Gangway Abutment Plan

NTS

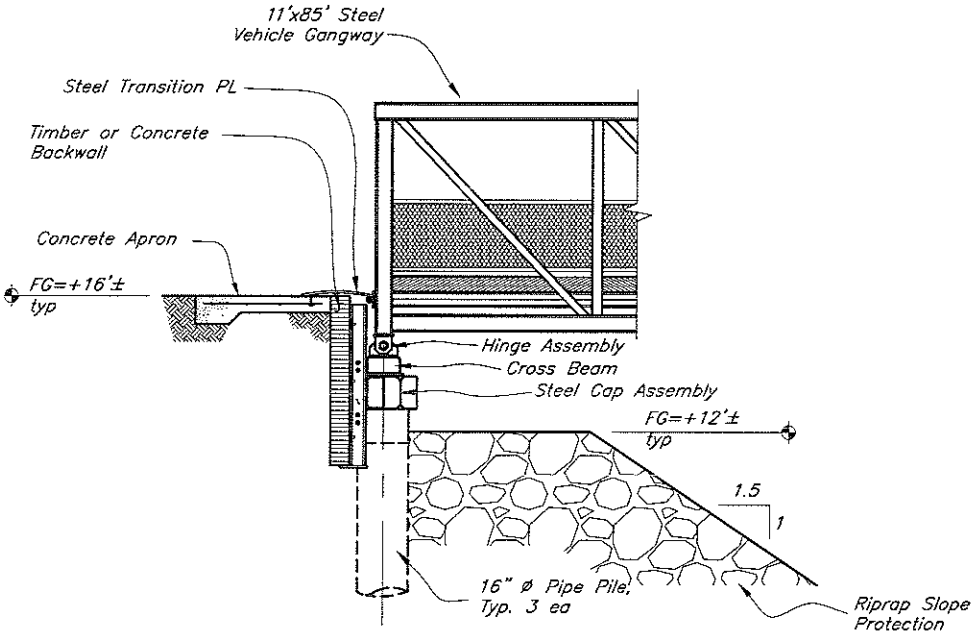

Gangway Abutment Section A-A

NTS

ADJACENT PROPERTY OWNERS:
State of Alaska
Department of Natural Resources

United States Forrest Service

WATER BODIES: Naukati Bay, Tuxekan Narrows

Gangway Abutment Plan & Section

APPLICATION BY:
STATE OF ALASKA
DEPT. OF TRANSPORTATION & PUBLIC FACILITIES
SOUTHEAST REGION

Naukati Harbor Improvements

AT: Naukati Bay, Alaska
LOCATED IN: Township 69 South, Range 80 East, Section 19, CRM, Alaska

DATE: June, 2010 SHEET 6 OF 13

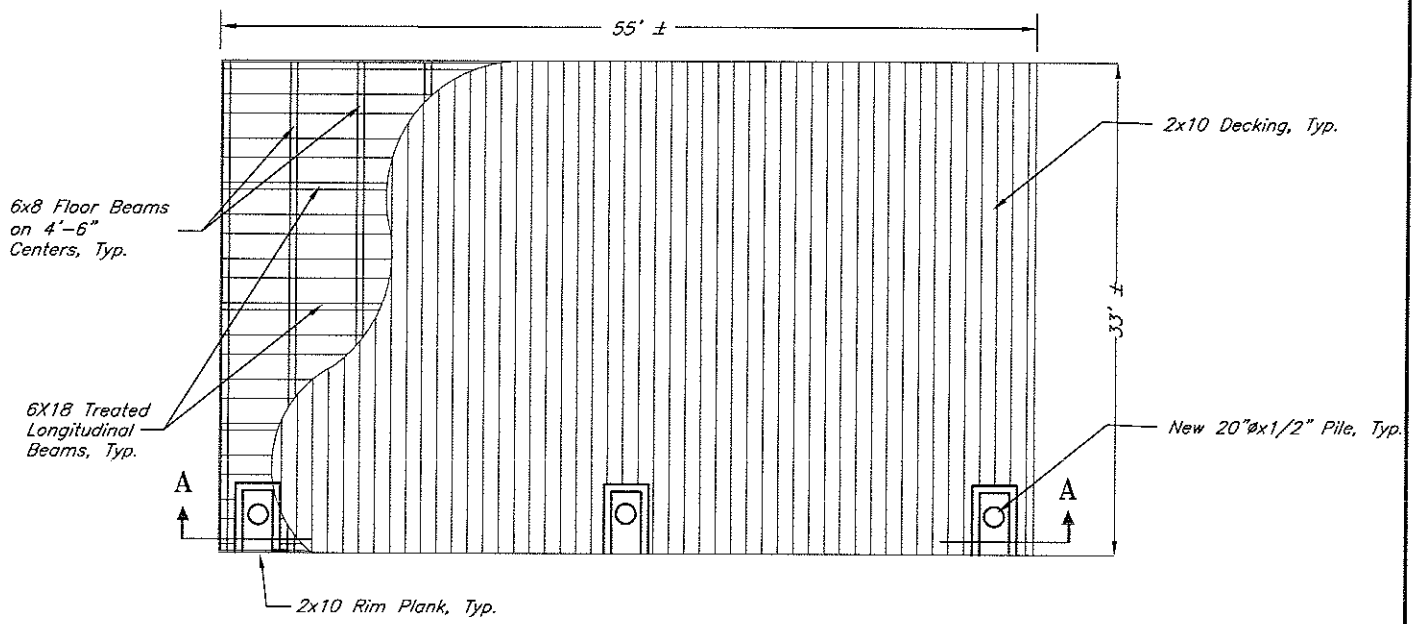

Relocated Existing 33'x55' Timber Float Plan

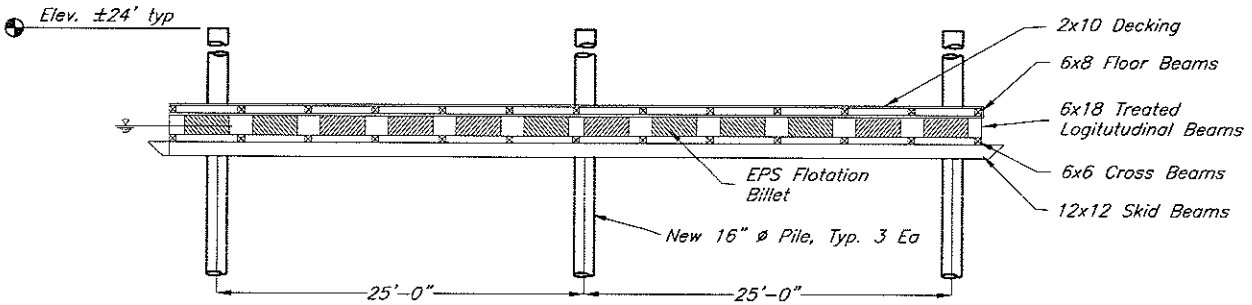

Section A-A

Timber Treatment Notes for all Floats

1. All timber below deck level including sills, blocking, stringers, siding and bottom sills are to be pressure treated with creosote preservative.
2. All timber deck level and above including, decking, bumper boards, and tiedown rails will be pressure treated with ACZA perservative.

ADJACENT PROPERTY OWNERS:
State of Alaska
Department of Natural Resources

United States Forrest Service

WATER BODIES: Naukati Bay, Tuxekan Narrows

Relocated Seaplane Float Plan & Section

APPLICATION BY:
STATE OF ALASKA
DEPT. OF TRANSPORTATION & PUBLIC FACILITIES
SOUTHEAST REGION

Naukati Harbor Improvements

AT: Naukati Bay, Alaska
LOCATED IN: Township 69 South, Range 80 East, Section 19, CRM, Alaska

DATE: June, 2010 SHEET 7 OF 13

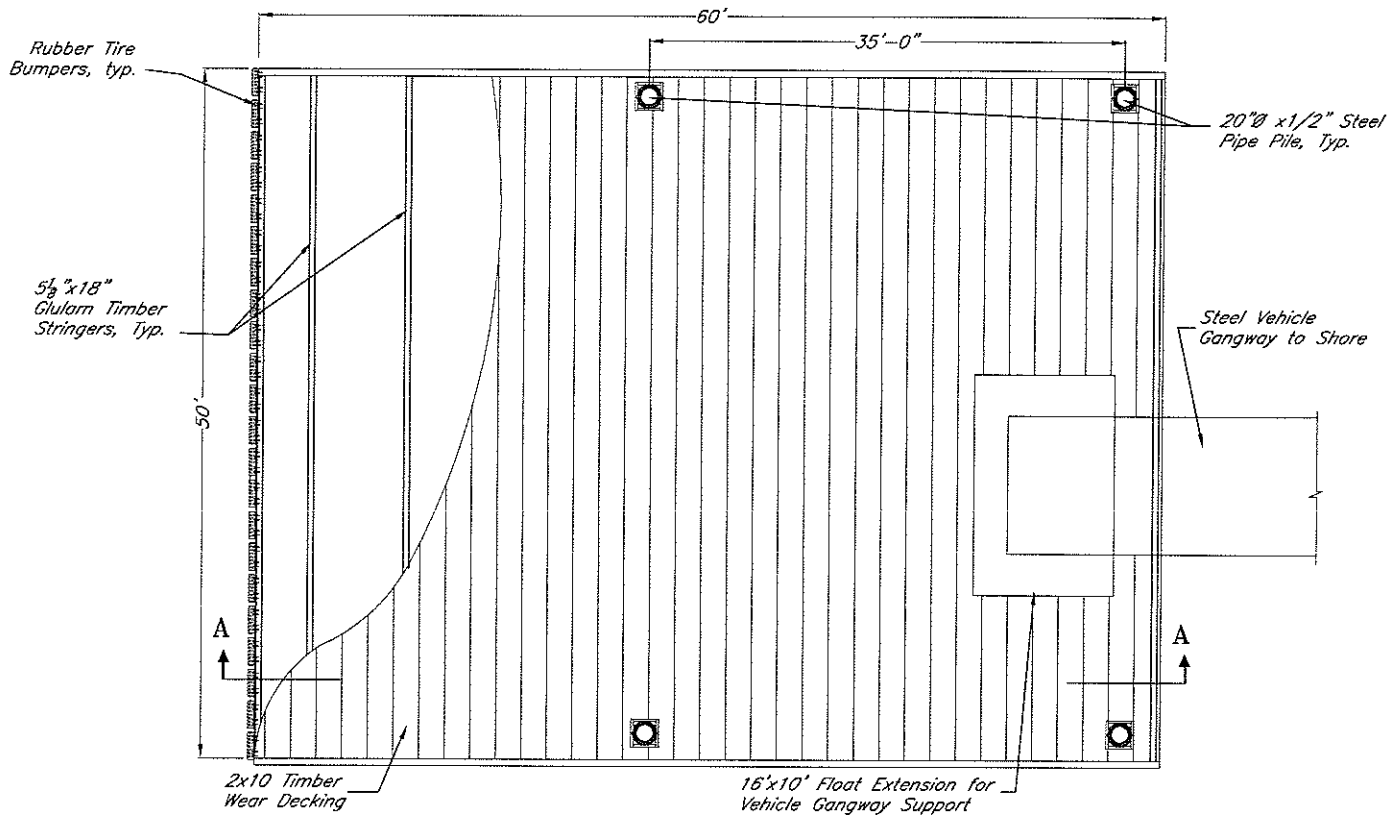

Plan

50x60' Timber Drivedown Float

NTS

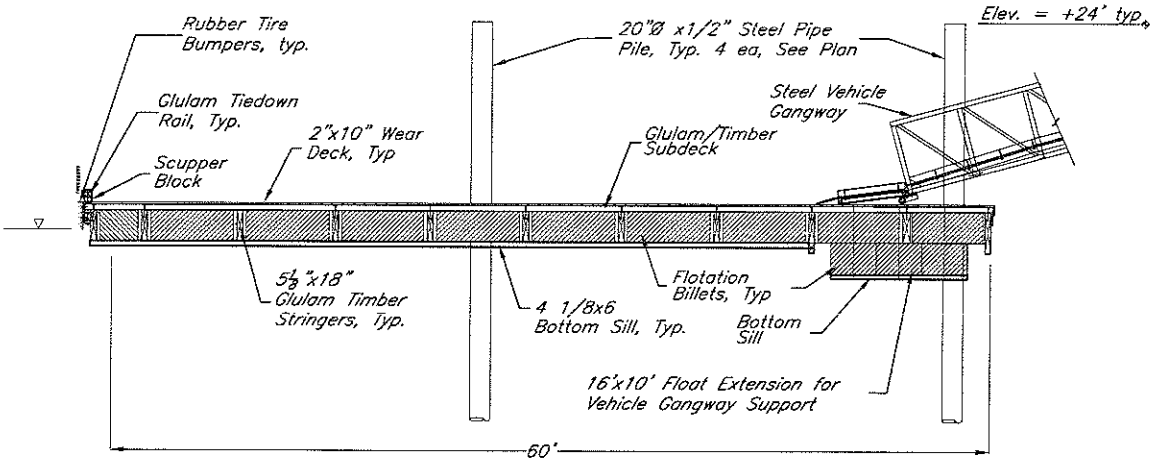

Typical Section A-A

NTS

ADJACENT PROPERTY OWNERS:
State of Alaska
Department of Natural Resources

United States Forrest Service

WATER BODIES: Naukati Bay, Tuxekan Narrows

Gangway Float Plan & Typical Section

APPLICATION BY:
STATE OF ALASKA
DEPT. OF TRANSPORTATION & PUBLIC FACILITIES
SOUTHEAST REGION

Naukati Harbor Improvements

AT: Naukati Bay, Alaska
LOCATED IN: Township 69 South, Range 80 East, Section 19, CRM, Alaska

DATE: June, 2010 SHEET 8 OF 13

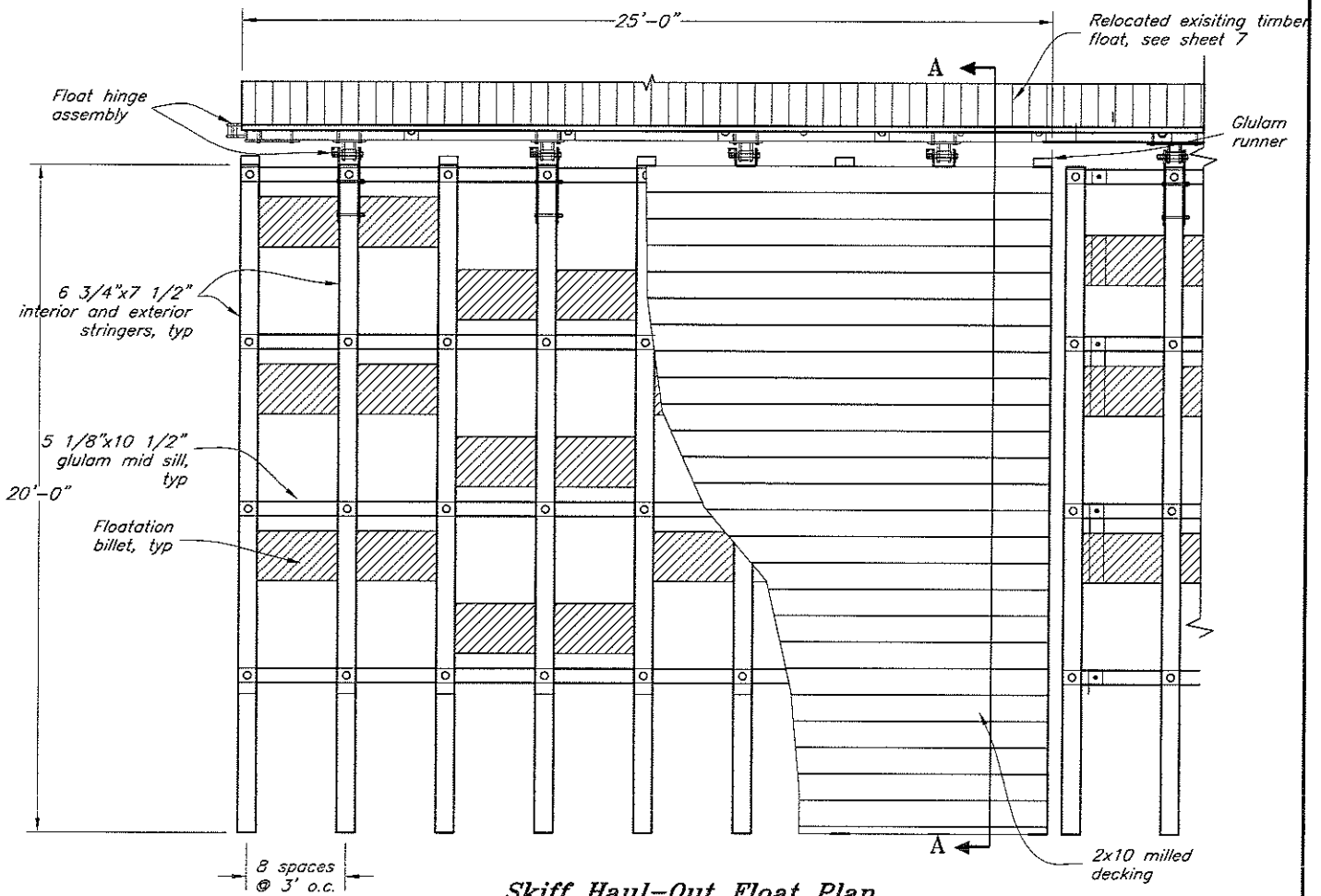

Skiff Haul-Out Float Plan

(2 req'd)

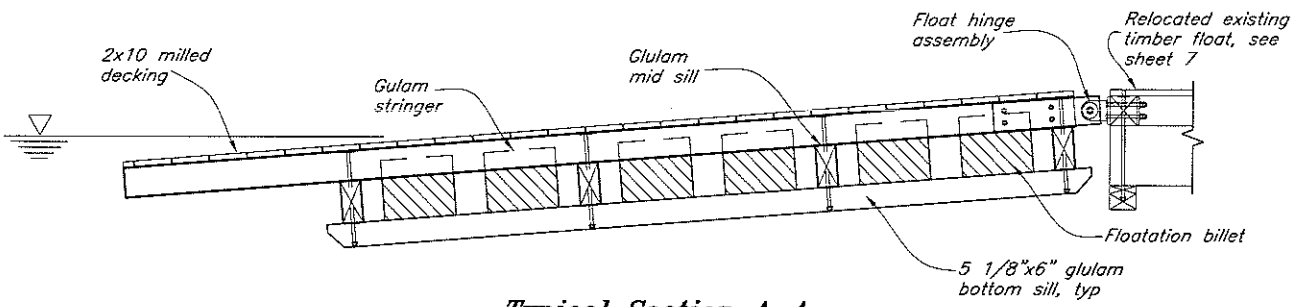

Typical Section A-A

ADJACENT PROPERTY OWNERS:
State of Alaska
Department of Natural Resources

United States Forrest Service

WATER BODIES: Naukati Bay, Tuxekan Narrows

Skiff Float Plan & Typical Section

APPLICATION BY:
STATE OF ALASKA
DEPT. OF TRANSPORTATION & PUBLIC FACILITIES
SOUTHEAST REGION

Naukati Harbor Improvements

AT: Naukati Bay, Alaska
LOCATED IN: Township 69 South, Range 80 East, Section 19, CRM, Alaska

DATE: June, 2010 SHEET 9 OF 13

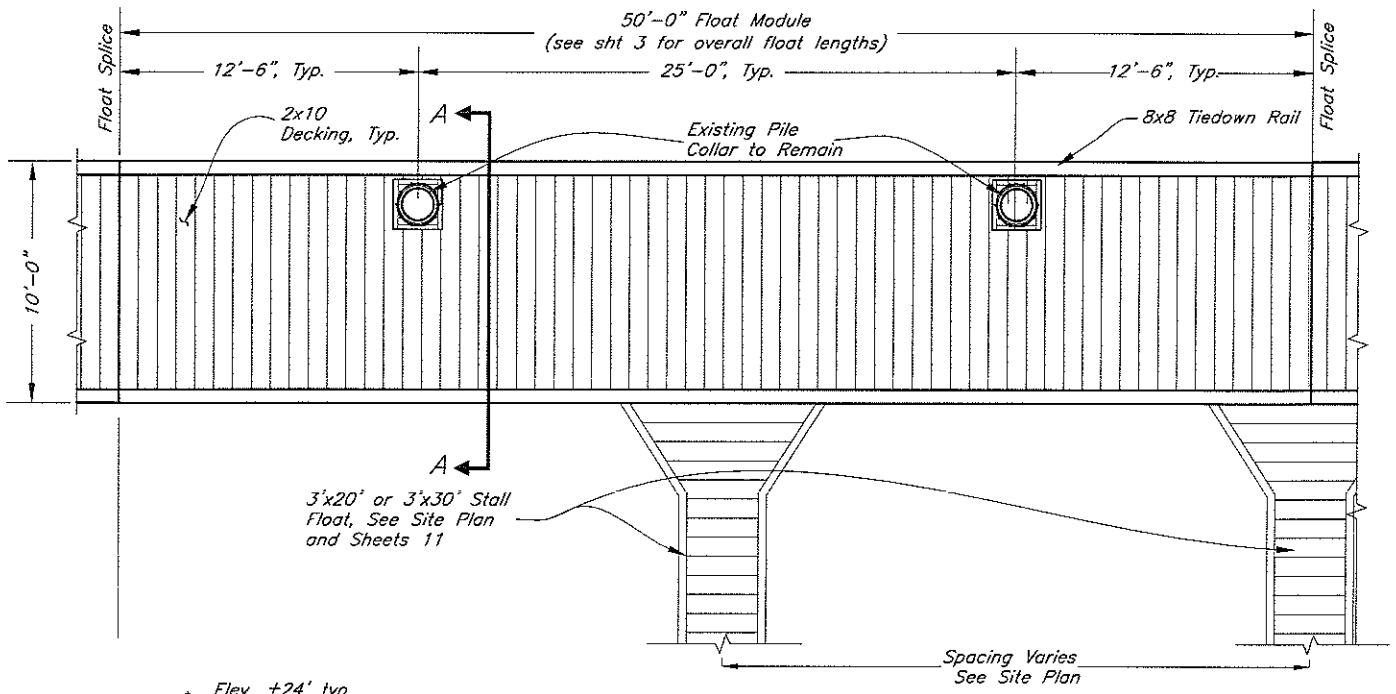

Typical Mooring Float Plan

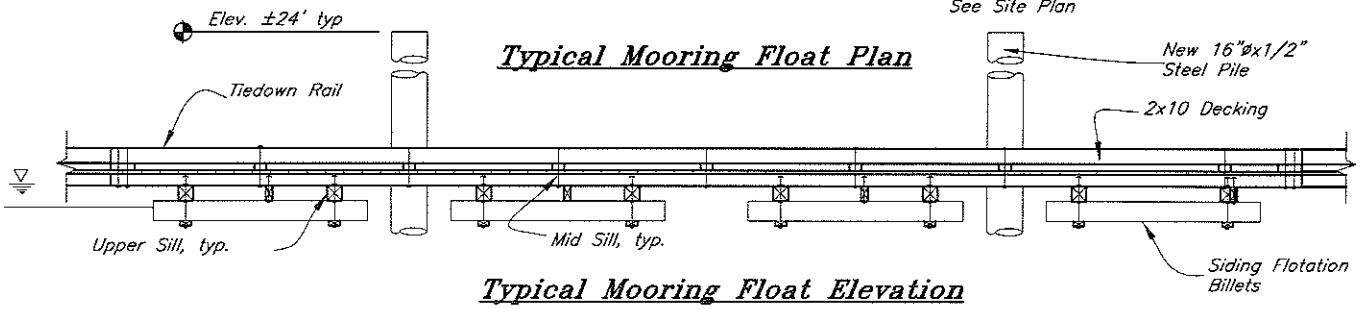

Typical Mooring Float Elevation

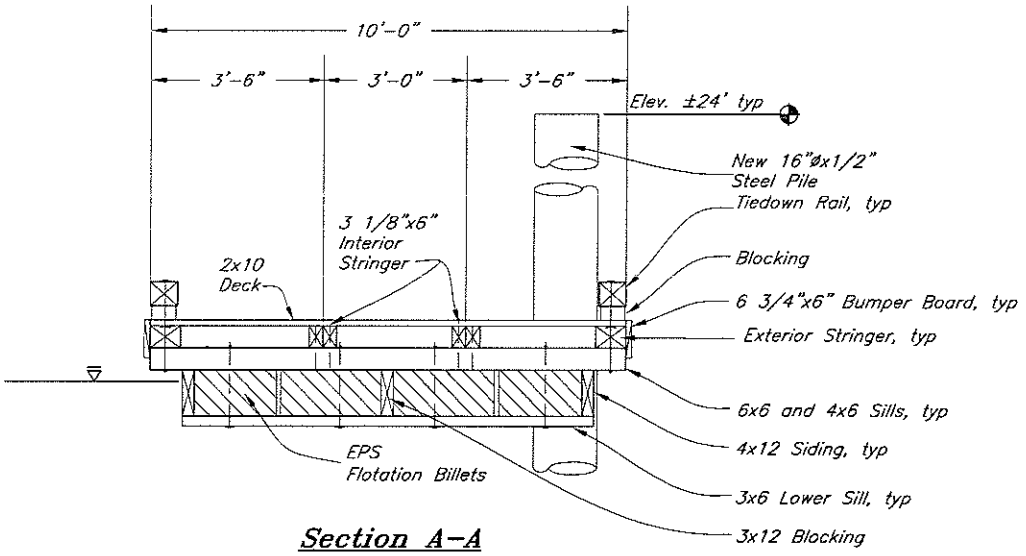

Section A-A

ADJACENT PROPERTY OWNERS:
State of Alaska
Department of Natural Resources

United States Forrest Service

WATER BODIES: Naukati Bay, Tuxekan Narrows

Mooring Float Plan, Elevation & Typical Section

APPLICATION BY:
STATE OF ALASKA
DEPT. OF TRANSPORTATION & PUBLIC FACILITIES
SOUTHEAST REGION

Naukati Harbor Improvements

AT: Naukati Bay, Alaska
LOCATED IN: Township 69 South, Range 80 East, Section 19, CRM, Alaska

DATE: June, 2010 SHEET 10 OF 13

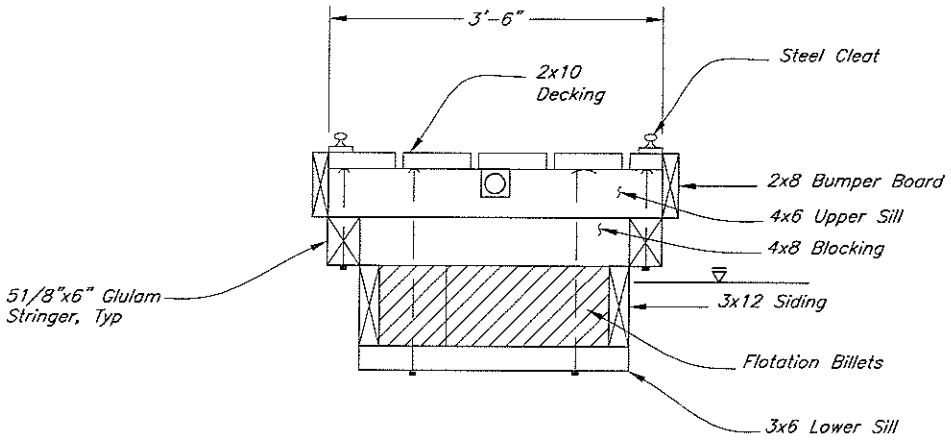

Typical Section
3.5'W x 20'L or 3.5'W x 30'L Timber Stall Float, See Plan
(6 Ea Req'd)

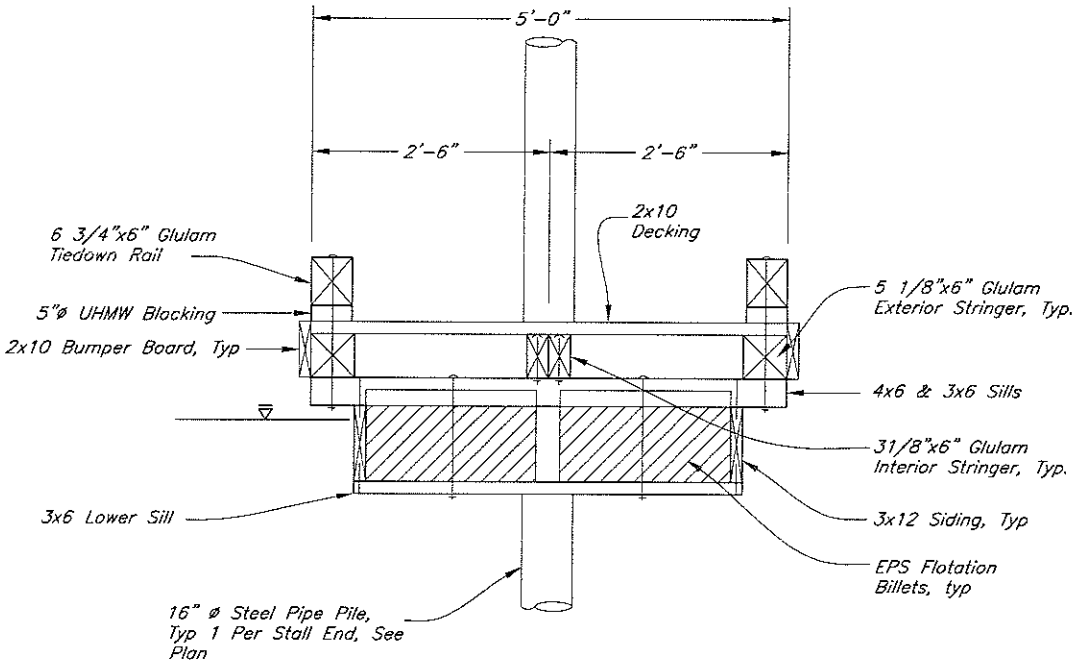

Typical Section
5'W x 40'L Timber Stall Float
(2 Ea Req'd)

ADJACENT PROPERTY OWNERS:
State of Alaska
Department of Natural Resources

United States Forrest Service

WATER BODIES: Naukati Bay, Tuxekan Narrows

3.5'x30', 3.5'x20' & 5'x40' Stall Float Typical Sections

APPLICATION BY:
STATE OF ALASKA
DEPT. OF TRANSPORTATION & PUBLIC FACILITIES
SOUTHEAST REGION

Naukati Harbor Improvements

AT: Naukati Bay, Alaska
LOCATED IN: Township 69 South, Range 80 East, Section 19, CRM, Alaska

DATE: June, 2010 SHEET 11 OF 13

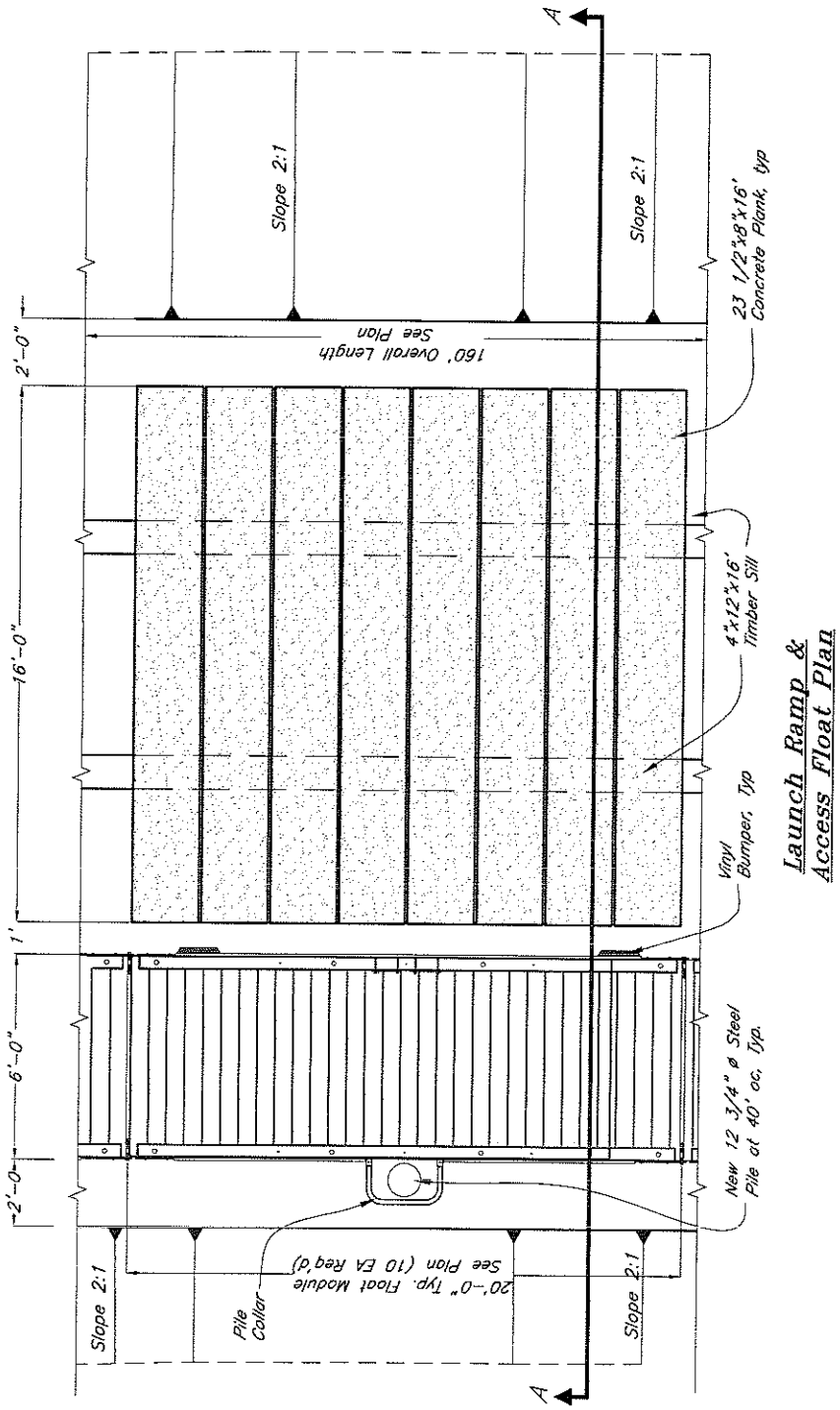

Launch Ramp & Access Float Plan

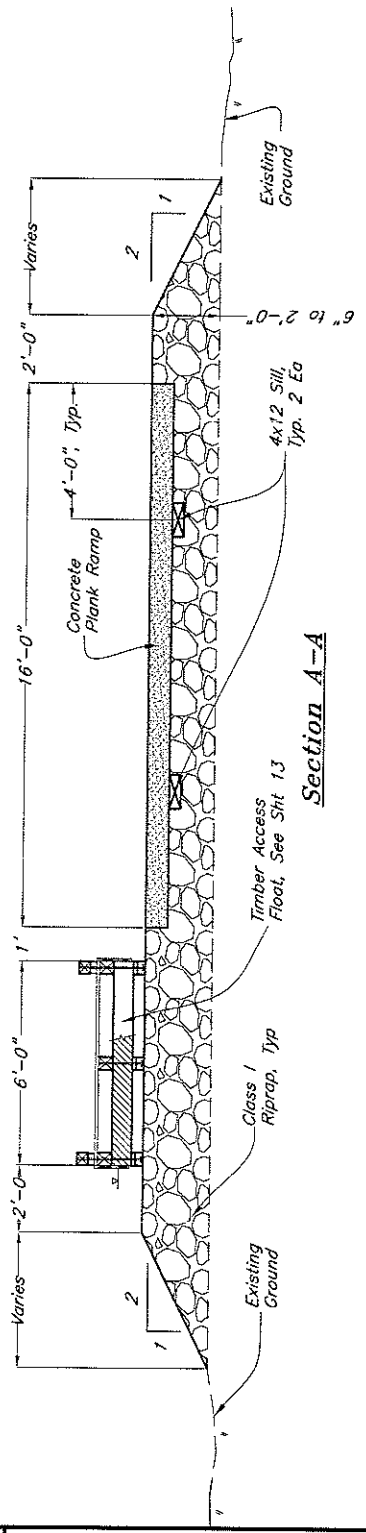

Section A-A

ADJACENT PROPERTY OWNERS:
State of Alaska
Department of Natural Resources

United States Forrest Service

WATER BODIES: Naukati Bay, Tuxekan Narrows

Launch Ramp & Walkdown Float Plan & Section

APPLICATION BY:
STATE OF ALASKA
DEPT. OF TRANSPORTATION & PUBLIC FACILITIES
SOUTHEAST REGION

Naukati Harbor Improvements

AT: Naukati Bay, Alaska
LOCATED IN: Township 69 South, Range 80 East, Section 19, CRM, Alaska

DATE: June, 2010 SHEET 12 OF 13

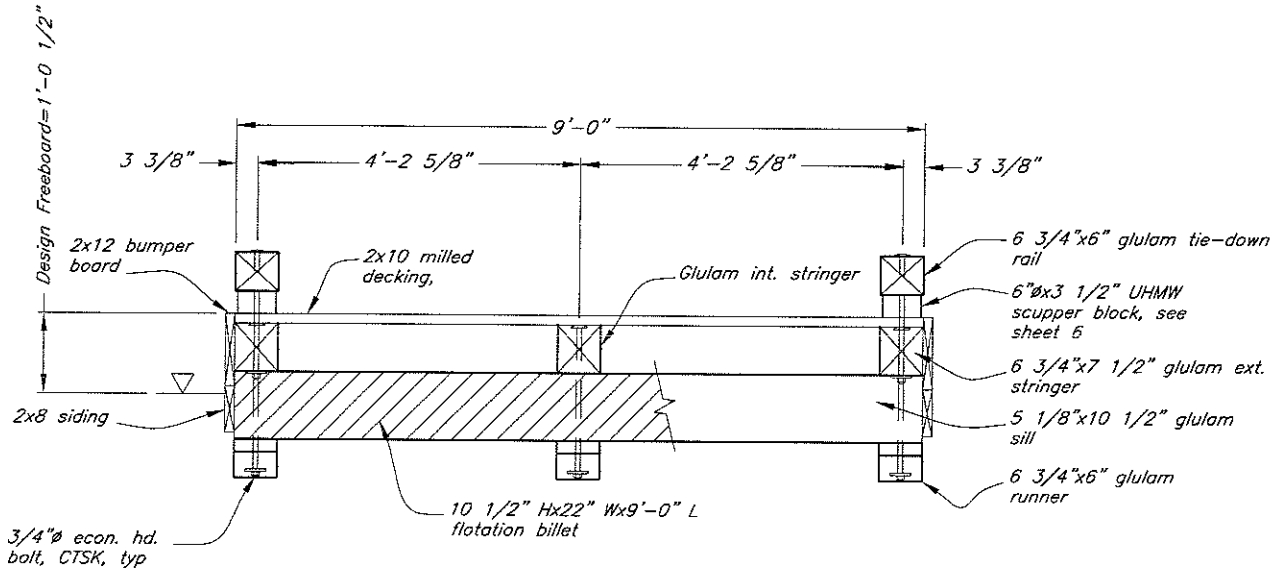

Typical Section

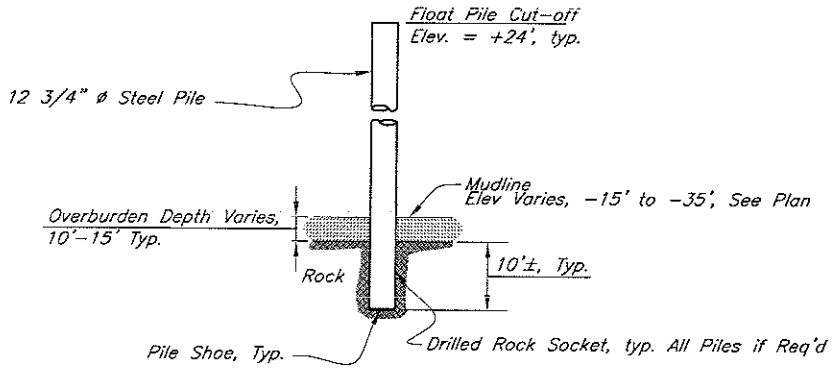

Typ Pile Socket Detail

Not to scale

ADJACENT PROPERTY OWNERS:
State of Alaska
Department of Natural Resources

United States Forrest Service

WATER BODIES: Naukati Bay, Tuxekan Narrows

Launch Ramp & Walkdown Float Plan & Section

APPLICATION BY:
STATE OF ALASKA
DEPT. OF TRANSPORTATION & PUBLIC FACILITIES
SOUTHEAST REGION

Naukati Harbor Improvements

AT: Naukati Bay, Alaska
LOCATED IN: Township 69 South, Range 80 East, Section 19, CRM, Alaska

DATE: June, 2010 SHEET 13 OF 13