Project: Port Retaining Wall
City of Nenana

Author: J. Leroy Hulsey, PhD, PE, SE
Alignment Systems, Inc.
620 Cambridge Drive
Fairbanks, AK 99709
asi.jlhulsey@att.net
(907) 460-8993

Draft

Nenana Port – Retaining Wall

May 15, 2011

ACKNOWLEDGMENTS

I thank Mark Sherman, PE and Tonya Bear, EIT for giving me the opportunity to assist them with this exciting project. I thank Pat Kalen (Kalen & Associates, Inc.) for providing survey data and a copy of site plan for this project. I also want to thank Don Carlson for his hydraulic expertise assistance and Xiong Zhang for his geotechnical evaluation and report.

[STRUCTURAL INVESTIGATION]

This report provides the owner with preliminary sizing recommendation for the subject project. My recommendations are in accordance with standard practice for retaining walls along port facilities. Preliminary design recommendations are in accordance with the Allowable Stress Method (ASD).

the as-built for the roadway project.

EXECUTIVE SUMMARY

General Information

The retaining wall was sized to meet the geotechnical findings provided by Dr. Xiong Zhang and the hydraulic conditions reported by Don Carlson. Both are members of the Sherman Engineering design team for this project.

Consider that the structure was designed to meet a 300 psf of load behind the wall. This load was introduced to accommodate future use should people drive behind the retaining wall. The soil conditions used for the design are based on the findings from the geotechnical report. Both Dr. Zhang and I performed an analysis for this retaining wall system.

Structural System. - Consider that I performed a hand solution using the free earth method (cantilever analysis). In addition, I analyzed the future wall using 3 computer models. The following models are:

1. Cantilever wall-
    a. SHRME01.DA - Linear analysis (depth of embedment is 20 ft and height is 39 ft)
    b. SHRME02.DA – Nonlinear springs (depth of embedment is 20 ft, height is 39 ft)
    c. SHRME03.DA – Nonlinear springs (depth of embedment is 30 ft, height is 49 ft)
2. Anchored wall-
    a. SHRME04.DA – Nonlinear springs, anchored with a dead man. The anchor is 3-ft down from the top. This was assumed to be a rigid anchor.

Standard methods for evaluating sheet pile retaining walls are based on hand solution techniques (these are referenced in the Sheet Pile Manual and Piling Handbook). These techniques provide the engineer a methodology to check equilibrium and it provides a factor of safety for this condition. These methods were used in this study by both Dr. Zhang (Geotechnical Investigation for Nenana Port) and the writer. The hand solution methodology does not give the engineer a deterministic measure of the amount of deformation or rotation of the wall system. The computer results provide a method for determining shear, moment and wall deformation. If a dead man is used, the anchor force is provided. In this study, both methods were used.

Summary of Findings

A wall with a depth of embedment of only 15ft below the dredge line will satisfy the factor of safety requirement for equilibrium. However, deflections at the top of the wall will be excessive (over 1.5 ft). Thus, the writer recommends using a tied back wall for this application. If a tied back wall is used in accordance with a depth of embedment of approximately 24 ft below the dredge line, the top of the wall will only be about 0.03 ft (see Figures 1, 2 and 3).

STRUCTURAL DETAILS

General

Consider that the proposed retaining wall along at the Port facilities along the Nenana River at the City of Nenana will be retaining about 15 ft of bank above a future dredge line. Based on this and the survey data and the geotechnical investigation by Dr. Zhang and the field investigation by Sherman Engineering, it is assumed that the bank is approximately above river top of water. For purposes of the analysis, the material at the river bank is assumed have a dry density of about 120 pcf and is primarily granular with a phi angle of 30 degrees. Both a hand solution and computer solution were performed by the writer. Using this information, the sheet pile wall was evaluated for a soil behind the wall of approximately above the water line and a 300 psf line load behind the wall. In the computer solution, the writer accounted for the soil nonlinearity; this information is provided in the Appendix.

Examples of similar projects are provided in Figures 4 through 8. Table 1 shows the expected design moments and wall displacements for the retaining wall. These are estimated, final design values will still be needed and should be calculated.

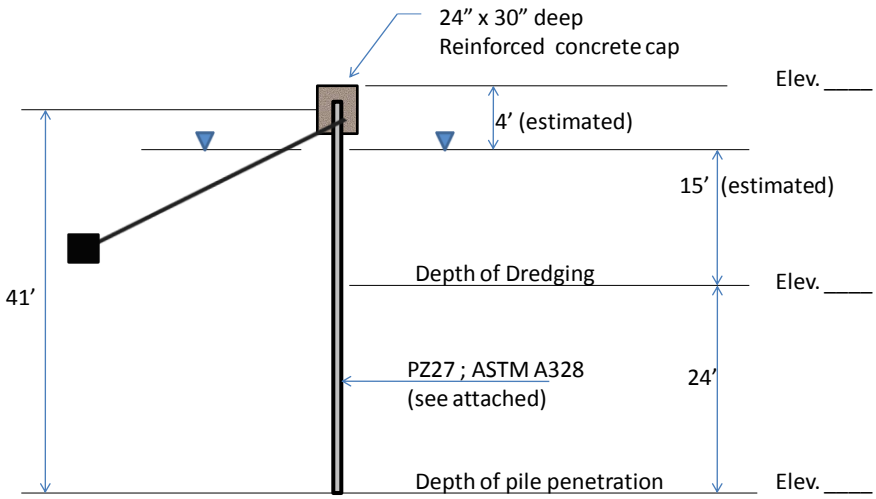

Preliminary Design Sizing

Note: size & depth of penetration may change with refined computer models

Figure 1 Typical Cross Section through the Sheet Pile Retaining Wall.

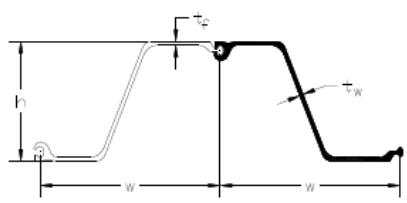

Section	Width (w) in (mm)	Height (h) in (mm)	Thickness: Flange (t_f) in (mm)	Thickness: Web (t_w) in (mm)	Area in²/ft (cm²/m)	Weight: Pile lb/ft (kg/m)	Weight: Wall lb/ft² (kg/m²)	Section Modulus in³/ft (cm³/m)	Moment of Inertia in⁴/ft (cm⁴/m)	Coating Area: Both Sides ft²/ft of single (m²/m)	Coating Area: Wall Surface ft²/ft² (m²/m²)
PZ 22	22.0	9.0	0.375	0.375	6.47	40.3	22.0	18.1	84.38	4.48	1.22
	559	229	9.50	9.50	136.9	60.0	107.4	973	11500	1.37	1.22
PZ 27	18.0	12.0	0.375	0.375	7.94	40.5	27.0	30.2	184.20	4.48	1.49
	457	305	9.50	9.50	168.1	60.3	131.8	1620	25200	1.37	1.49
PZ 35	22.64	16.10	.600	.500	10.29	66.0	35	48.5	361.2	5.37	1.42
	575	408.9	15.2	12.7	217.9	98.3	52.1	2604.5	49227.2	164.2	1.42
PZ 40	19.69	14.90	.600	.500	11.76	65.6	40	60.7	490.8	5.37	1.64
	500	378.5	15.2	12.7	249	97.7	59.6	3259.6	66890.2	164.2	1.64

Delivery conditions & tolerances according to ASTM A6/ A6M latest revision with the exception of length, which is +4”, -0.

Figure 2 Sheet Pile Sectional Data (after MAFCO Mid-America Foundation Supply, Inc.)

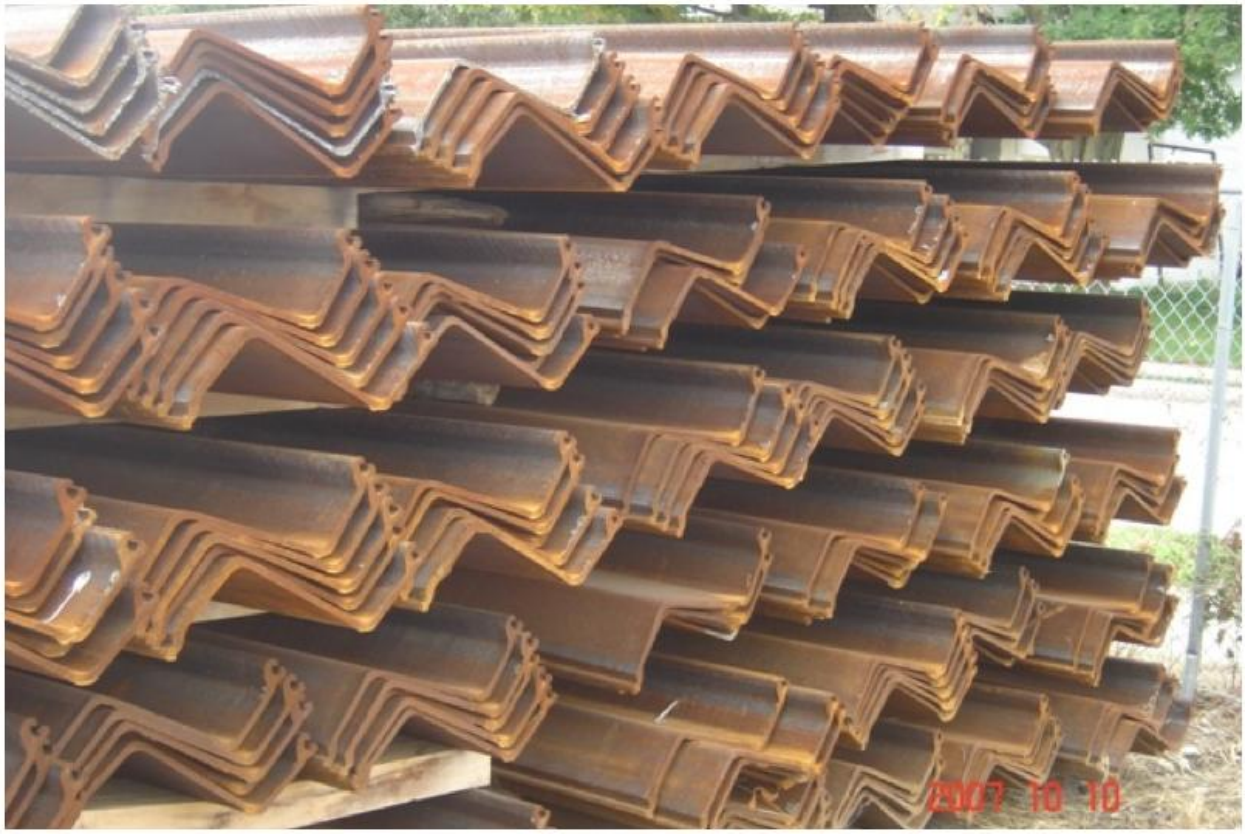

Figure 3 Stacked PZ27 Sheet Piles at Job Site (after MAPCO)

Figure 4 Sheet Pile Installation along river bank in Indiana (after MAPCO)

Figure 5 Example Sheet Pile Installation for a Port Facility
(**http://www.arcelormittal.com/distributionsolutions/projects/business_lines/foundation_solutions/applications**)

Figure 6 Typical waler installation for a tied back sheet pile retaining wall

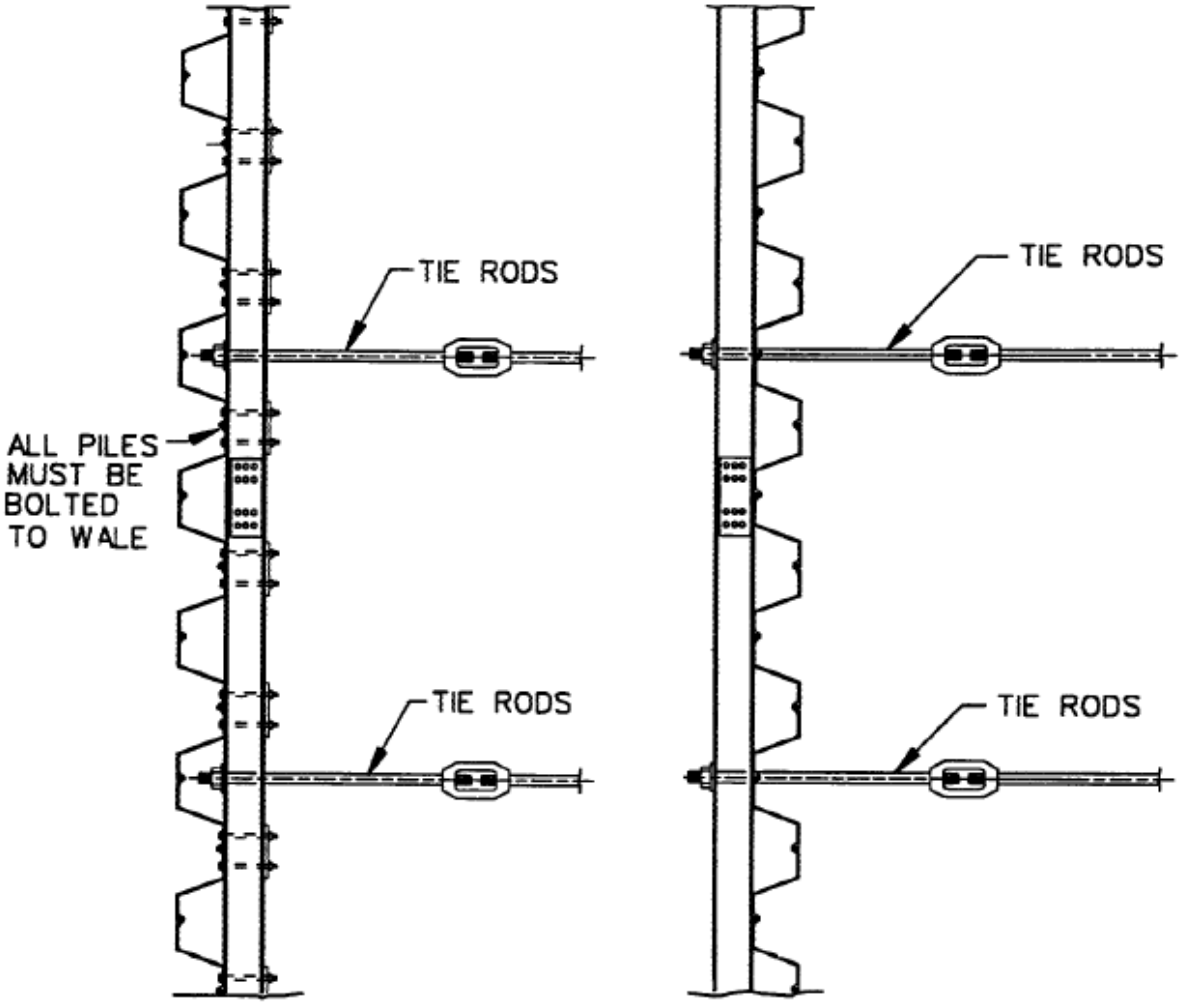

Figure 7 Top view of a waler design application (after Piling handbook chapter 6)

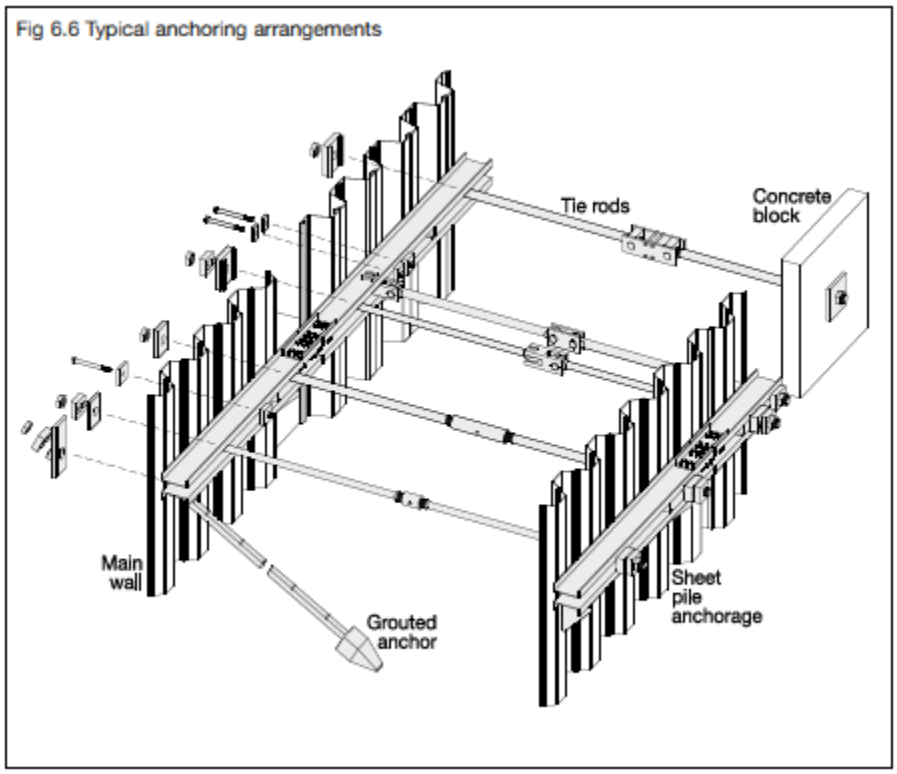

Figure 8 Isometric for alternate tie backs using a dead man
(After: Piling Handbook 8th Edition Reprint Arcelor Mittal)

Table 1. Summary of Structural Conditions

File	D(ft)	H(ft)	Condition	Deflections top	Deflections bottom	Max Mom (ft-k)	Flexural (ksi)	Anchor (kips)	Comment
Nonlinear Solutions:									
SHRME02	19	39	Cantilever	-1.98	0.15	53.7	21.34	---------	(NG)
SHRME03	30	49	Cantilever	-1.6	0.014	60	23.84	----------	(NG)
SHRME04	19	39	Anchored	-0.114	0.045	24	9.54	3.46	(OK)

Anchors are 1 3/8" in diameter. The dead man is located at approximately 15-ft behind the wall at 3-ft from the top. The anchors shall be spaced at 8-ft or less. The anchors shall have provisions with a turnbuckle so that they may be adjusted in the field at time of installation. Anchors shall be secured with 2 channels (C8x11.5) at front and back. This means at both the dead man and the front of the wall.

CONCRETE CAP

Once the sheet pile wall has been installed, the contractor shall install a metal cap plate with ¾" diameter Nelson studs spaced at 12" on center. The concrete strength at 28 days shall be 4,000 psi and the reinforcing shall be Grade 60. A preliminary design for this cap was prepared and it is included in Figure 9.

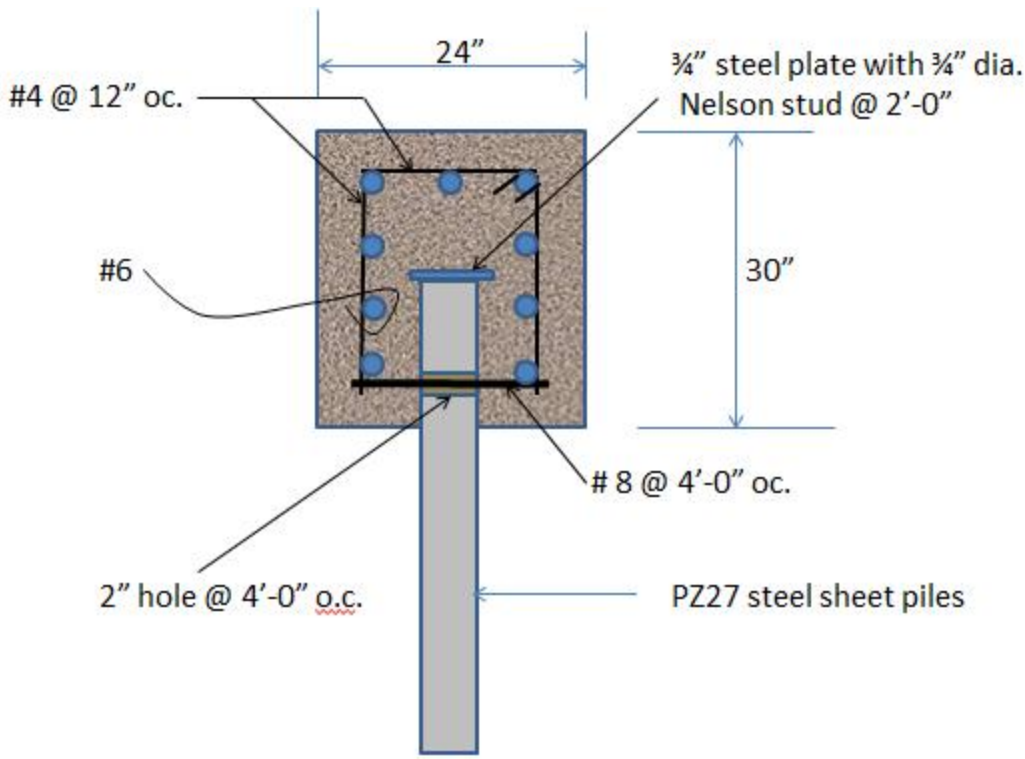

Figure 9 Concrete cap details for the top of the sheet pile wall

FINDINGS

In my professional opinion, the retaining wall shall installed using PZ27 steel sheet piles. The sheet piles should be anchored approximately 3-ft from the top using a dead man. The dead man may be constructed by excavating 4-ft deep and installing a wall using any number of products

such concrete, steel or treated timbers. As an alternative, the dead man may be installed using sheet piles with a 1 3/8" rod and turnbuckle. The sheet pile cross-section will be coordinated with the requirements imposed by the construction layout provided by Sherman Engineering.

REFERENCES

http://civilwares.free.fr/Geotechnical engineering - Principles and Practices of Soils Mechanics and Foundation Engineering/Chapter.pdf

http://geolab.unm.edu/Chapter 4.pdf

http://www.scribd.com/doc/13792515/Laterial-Support-System-And

Piling Handbook 8th Edition Reprint Arcelor Mittal

California Trenching Manual – Sheet Piles

ASCE Structural Design WP

SSP Design Manual

General Products Brochure US

APPENDIX