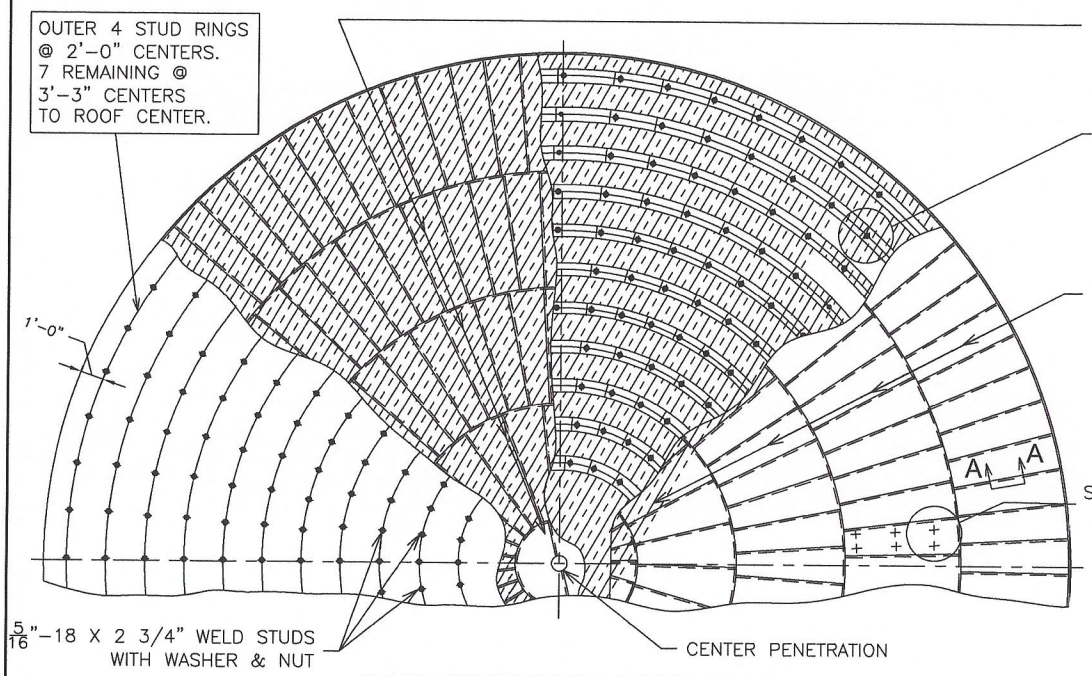

TANK ROOF INSULATION DETAILS

N.T.S.

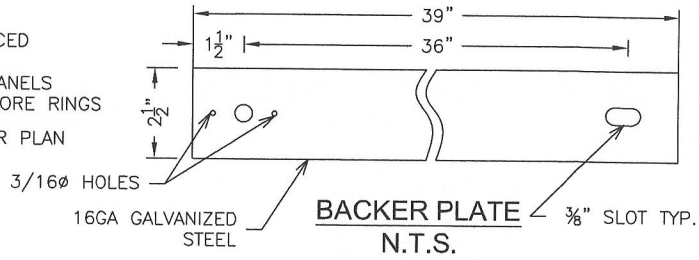

BACKER PLATE

N.T.S.

SEE DWG.43490-16

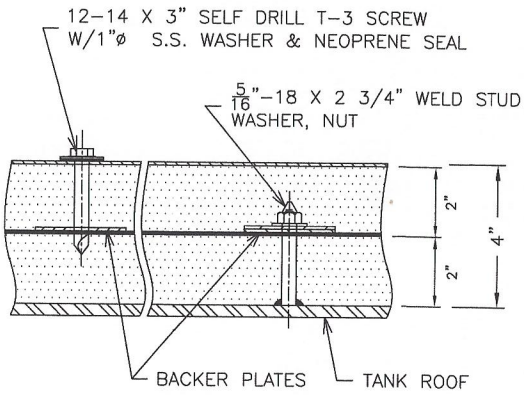

SECTION A-A

N.T.S.

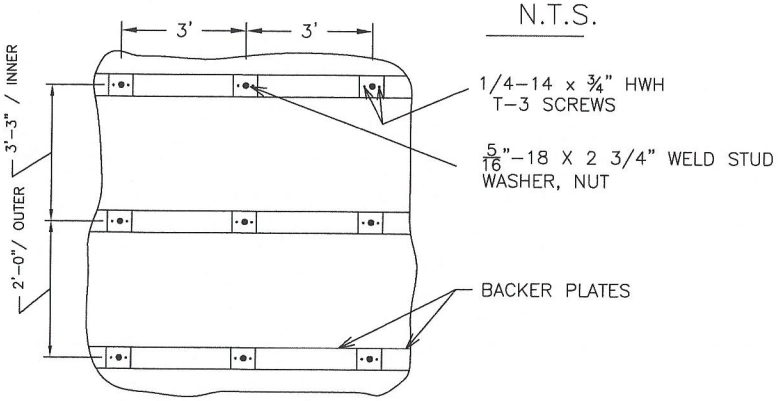

TYP. INNER LAYER PLAN

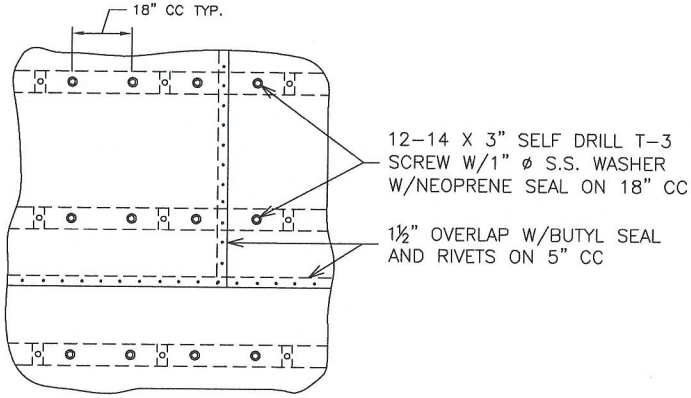

TYP. OUTER LAYER PLAN

COMPANY CONFIDENTIAL

This document containing proprietary information of VERTARIB INC. is transmitted to you in confidence and trust and is to be returned upon request. Its contents may not be disclosed in whole or in part to others or used for other than the purpose for which transmitted without the prior written permission of VERTARIB INC.

THERMACON INSULATION SYSTEMS by

VERTARIB INC.

PANELED ROOF INSULATION SYSTEM

WATER STORAGE TANK
SHAKTOOLIK, AK
65'Ø x 32'" H CRT

SCALE: NOT TO SCALE		FABRICATED BY: .	
DRAWN BY: CC	DATE: 7/15/12	SHEET No. 1 OF 1	REV
APPROVED BY:	DATE:	DRAWING No. SHAK-02	1
		CAD FILE NAME:	