KASIDAYA CREEK HYDROELECTRIC PROJECT SKAGWAY, ALASKA

FINAL TECHNICAL AND CONSTRUCTION COST REPORT

JANUARY 2009

PREPARED BY:

ALASKA POWER & TELEPHONE CO.
P.O. BOX 3222
PORT TOWNSEND, WA 98368
(360) 385-1733

KASIDAYA CREEK HYDROELECTRIC PROJECT

SKAGWAY, ALASKA

FINAL TECHNICAL AND CONSTRUCTION COST REPORT

Prepared for:

U.S. Department of Energy

Prepared by:

Alaska Power & Telephone Co.
P.O. Box 3222
Port Townsend, WA 98368

December 31, 2008

Table of Contents

Table of Contents 3

1.0 Introduction 4

2.0 Project History 5

3.0 Project Description 7

- 3.1 General 7
- 3.2 Marine Access Facilities 7
- 3.3 Access Road 7
- 3.4 Diversion Structure 8
- 3.5 Penstock 8
- 3.6 Powerhouse 9
- 3.7 Switchyard 10
- 3.8 Transmission Line 10

4.0 Permits and Licenses 10

5.0 Project Management 11

- 5.1 Organization 11
- 5.2 Key Design, Construction And Quality Control Personnel 12

6.0 Project Cost 14

7.0 Project Energy Production 14

8.0 Appendix I - Photographs 14

9.0 Appendix II - Selected Drawings 40

1.0 Introduction

Alaska Power & Telephone (AP&T) provides power and telephone services to 30 isolated communities in rural Alaska. In the mid 1990's AP&T envisioned the Upper Lynn Canal Regional Power Supply System that would meet regional power requirements utilizing renewable energy. The desire was to utilize the area's hydroelectric potential along with interties connecting the boroughs of Haines and Skagway along with Inside Passage Electric Cooperative (IPEC). At that time, isolated diesel generator plants met most the power needs forth region with minor contributions from Dewey Lakes Hydro in Skagway and Lutak Hydro in Haines.

The Upper Lynn Canal (ULC) plan included construction of the 4 megawatts (MW) Goat Lake Hydro project in 1997, a 15 mile submarine cable intertie between Haines and Skagway in 1998, a 7 mile intertie between Haines and IPEC in 2007 and finally the construction of the 3 MW Kasidaya Hydro Project. ULC system peak demand in 2008 approached 5 MW. The table below describes the system's generation equipment, location and capacity.

Upper Lynn Canal Generation Units

Unit	*Type*	*Capacity, kW*	*Efficiency, kWh/gal*	*Age, years*
Goat Lake	*Hydro (storage)*	*4,000*	*N.A.*	*11*
Dewey Lakes	*Hydro (storage)*	*943*	*N.A.*	*106*
Lutak	*Hydro (run of river)*	*285*	*N.A.*	*9*
10-Mile[1] *(not AP&T's)*	*Hydro (run of river)*	*600*	*N.A.*	*8*
Kasidaya	*Hydro (run of river)*	*3,000*	*N.A.*	*0*
Skagway #6	*Diesel*	*855*	*14.69*	*22*
Skagway #7	*Diesel*	*1,100*	*14.80*	*12*
Skagway #8	*Diesel*	*500*	*14.89*	*17*
Skagway #9	*Diesel (refurbished)*	*930*	*?*	*0*
Haines #1	*Diesel*	*800*	*12.64*	*39*
Haines #2	*Diesel*	*1265*	*12.93*	*25*
Haines #3	*Diesel*	*1600*	*14.92*	*19*
Haines #4	*Diesel*	*2865*	*12.83*	*13*

The Kasidaya Creek Hydroelectric Project[2] is the final part of the original power supply plan. Kasidaya Creek is located on Taiya Inlet, 3 miles south of the City of Skagway and 12 miles northeast of Haines, Alaska. The project occupies about 6.0 acres of road-less forested land within the Tongass National Forest. Kasidaya Creek is a glacial-fed stream about 4.5 miles long, drains an area of about 19 square miles and flows into Taiya Inlet. Access for construction, operation and maintenance is entirely by water.

Kasidaya Creek Hydro is a run-of-river project that provides power primarily from May through November. During the peak discharge period, the project only taps a portion of the water

[1] 10-Mile Hydro only supplies the ULC grid at AP&T's discretion. This plant's primary market is IPEC. This is a run-of-river project that provides power for only part of the year.
[2] Name Change from Otter Creek Hydro was approved by FERC on June 26, 2006.

available in Kasidaya Creek. This project along with the smaller run-of river hydro projects on the ULC grid enable Goat Lake's storage to be fully recharged during the summer for use during the winter periods of very low inflow. Power loads exceeding the hydro capacity are met with diesel generation when necessary and provides standby capacity.

AP&T received a Federal Energy Regulatory Commission (FERC) license on October 15, 2002. Construction began spring 2006 with substantial completion in November 2008 and first electricity generation.

2.0 Project History

The idea of developing a hydroelectric project at Kasidaya Creek dates back to the mid 1990's when AP&T began stream flow monitoring to determine if this would be a feasible site. After more than a year of monitoring, it was determined that this site had good potential for adding generation to the Upper Lynn Canal (ULC) grid.

In 1999, a license application was submitted to the FERC and a license issued in 2002.

In January 2006, AP&T applied for a license amendment to change the penstock design to include a short tunnel to reach the diversion site. The original license routed the penstock over a saddle and along the north side of Kasidaya creek. This route would have required extensive bench cuts and would have subjected the road and penstock to unacceptable rockslide hazards. Construction of a 700-foot long tunnel would bypass this stretch and provide a somewhat shorter penstock.

Mobilization began on April 11, 2006, using an LCM-8 landing craft and 35-foot crew boat with a bow-loading ramp. The jetty, staging area and road right of way clearing and construction began immediately. Placement of large rocks on top of the existing reef increased its height and provided protection from the southerly wind generated waves in Taiya Inlet. Materials from excavation of the powerhouse were utilized in the jetty and road construction. Felled trees were skidded and stacked on the beach staging area for US Forrest Service (USFS) scaling of merchantable timber.

Construction effort through the summer and fall of 2006 focused primarily on excavation of the powerhouse and tailrace and construction of the first 2500 feet of road. Extensive blasting was required to cut the roadbed to grade through bedrock and a large house sized boulder field. Storm drains were installed and drainage improved to control erosion and sedimentation during the fall storm season. Winter weather ended the road construction following installation of a 60-inch-diameter by 70-foot-long culvert in the "North Tributary". Focus then shifted to completing the powerhouse foundation and erection of the powerhouse structure.

Through out the construction, compliance with license plans and agency requests were reviewed regularly by the on site environmental compliance monitor (ECM). FERC and USFS inspectors also made periodic visits. The ECM reports and laboratory test results were provided in weekly and monthly reports to the agencies.

During the fall-winter of 2006, it became apparent that the costs and unknowns involved with constructing the 700-foot tunnel were much higher than originally estimated. Additional survey work indicated that it would be more cost effective to extend the road cutting through a rock saddle to Kasidaya creek, bridge across and access the diversion site from the south side of the creek. On January 2006, a FERC amendment was applied for to make this change.

In 2007, the LCM began moving penstock materials to the site as weather permitted. These trips provided opportunity to backhaul timber to Skagway that was given to the community for firewood. While much of the timber had market value, the value was not enough to make transporting it economical and there was no sawmill in Skagway.

In early spring, the powerhouse structure was completed along with the tailrace from the powerhouse to the beach. The 70-foot tall cut bank on the east side of the powerhouse and tailrace was stabilized with riprap from the road excavation. The upper cut bank area with suitable slope and soil was seeded with grass and covered with jute mat to promote re-vegetation.

Excavation, bedding, placement, welding and backfill of the penstock followed the powerhouse construction. The first 105 feet of penstock, leaving the powerhouse, is 42-inch welded-steel pipe. Buried concrete thrust blocks support the pipe outside the powerhouse as it makes a 90 degree bend and heads uphill, crosses the road alignment connecting with the buried 42-inch ductile iron pipe. The ductile iron pipe joints allow up to 3 degrees of deflection at each joint as it follows the road alignment. Miter cut fabricated 42-inch steel pipe bends created larger bends. Approximately 1700 feet of buried penstock was installed by the end of 2007.

In June 2007, the FERC license amendment was received to extend the road and bridge across Kasidaya Creek to access to the diversion site from the south. Right of way clearing and road construction commenced immediately and the road was pioneered into the bridge site fall. During excavation of the bridge abutment, rock conditions required design changes making the abutments larger and more complicated that anticipated. By the end of 2007, the bridge abutments were only partially completed and construction slowed by heavy snow and cold weather.

With 2008 came even more difficult winter conditions of heavy snowfall, extreme temperatures and high winds reducing productivity and making marine access hazardous. Construction was shutdown during the worst weather and progress slowed more. These conditions stressed equipment mandating extra effort to maintain concrete above freezing while batching, pouring and curing. Portable heaters, electric heated blankets and insulating blankets provided heat to the concrete. In March 2008, the completed bridge began providing access to the south side of the creek to complete the road and begin work on the diversion dam.

The winter conditions proved beneficial by providing the necessary low water period needed for diversion dam construction. Summer water flow is in the range of 300 to 600 cfs, which is not feasible to divert in the narrow bedrock valley. The low winter flow of around 5 to 15 cfs was readily diverted to the north while the fore bay, valve house and sluiceway were constructed. The water was then diverted through the sluiceway while the 36-foot spillway was constructed

and the Obermeryer spillway gates were installed. Final in-stream work was completed in late April just as the creek level began rising.

Following the completion of the diversion, construction of the valve house took place, the buried HDPE and above ground ductile iron portion of the penstock installation, generation and auxiliary equipment was set, and connections made. On September 13 the last penstock piece was connected. The last large construction effort was forming the 50 concrete saddles supporting the above ground portion of the 42" ductile iron pipe. September 6, the spillway gates were raised and the diversion pool rose to full height. On October 9 water filled the penstock. October 11 saw the first generation under manual control. Commissioning turned up several defective control parts and revealed additional work necessary to achieve full automation.

3.0 Project Description

3.1 General

The main features of the project include an access road with bridge across Kasidaya Creek, diversion structure with intake, valve house, a combination of HDPE, ductile iron, and steel penstock sections, powerhouse, tailrace channel, pad-mount transformer, jetty with marine access ramp, and a buried transmission line to an existing submarine cable splice-vault. Plan and section drawings of these features are in Appendix B.

3.2 Marine Access Facilities

The project area is not accessible by existing roads. Access required building facilities for construction and operation materials, equipment, and personnel, with transportation primarily provided via a crew boat and LCM-8 landing craft. The marine access facilities include the following:

- Jetty, 200 feet long, constructed with a rubble-mound and placed just north of the existing submarine cable landing. The jetty provides relatively calm water for landing personnel, materials, and equipment when winds are from the south. The top of the jetty will also serve as a helipad as will the staging area behind the jetty.
- Staging area constructed to the southeast of the jetty, between the jetty and the existing submarine cable vault from fill. This area provided a level staging area for materials and equipment unloaded from the landing craft, as well as a helipad. Most of this fill is above the mean high water level.
- Boat ramp constructed to the north of the jetty by grading and placing concrete planks.

3.3 Access Road

There are no roads to the project site; access can only be by air or water. An access road was constructed from the marine access facilities to the diversion structure. This access road has a length of approximately 4,000 feet, nearly all of which is adjacent to the penstock. The road was

initially built with a minimum travel width of 14 feet for construction use. The access road has sections of full bench cut into bedrock with the balance being cut and fill construction.

Culverts maintain natural drainage channels along the access road, but not more than 300 feet apart. The road crosses one significant tributary of Kasidaya Creek; a large culvert through fill provides drainage for the creek at this location.

The access road crosses Kasidaya Creek about 350 feet below the diversion structure. Concrete abutments formed during winter low flows hold a steel framed bridge across the creek. A steel section of the penstock spans the creek adjacent to the bridge using the same abutments.

3.4 Diversion Structure

The diversion structure is located on Kasidaya Creek, at about the 559-foot elevation. The diversion structure is above a significant anadromous barrier, a falls of approximately 100 feet in height plus other anadromous barriers from the falls to the creek mouth. An integral intake draws water from the impoundment at the southern end of the diversion structure.

The diversion structure consists of: (1) a reinforced concrete and rock fill north abutment; (2) a spillway with a pneumatically-operated gate; (3) a sluiceway; and (4) intake.

The intake is located at the southern end of the diversion structure, and consists of a trash rack, transition piping, 48” shutoff valve, in-stream flow release facilities, and control equipment. The sluiceway includes a 72-inch wide by 60-inch high sluice gate, operated occasionally to sluice sediment from the intake area. The in-stream release facilities consist of an ungated pipe that releases water from the intake downstream of the trash rack to the natural stream channel. An orifice plate controls the in-stream release facilities to maintain a minimum discharge rate of five cubic feet per second (cfs).

The normal water level of the impoundment is 570-foot elevation. When the gate is fully lowered at normal water level, the spillway discharge capacity is estimated at 3,100 cfs equivalent to the 100-year flood. The top of the north abutment and intake are at the 573-foot elevation providing sufficient freeboard for 4,900 cfs or the 900-year flood.

3.5 Penstock

The total penstock length is 3,994 feet (3,933 feet horizontal length), comprising the segments shown in Table A-1 below. The penstock alignment followed these considerations:

- The ground slope on the north side of the creek near the diversion structure is extremely steep, while south side slope is considerably less steep. This provided better access route without the cost and uncertainty of a tunnel.
- The Forest Service requested alignment avoiding long linear features of straight down design that would be visible from Taiya Inlet. Avoiding such alignment dictated two large bends making it nearly parallel to Taiya Inlet.

- The Forest Service allowed a maximum road slope of 20%. With a permanent access road and a mandate against going straight down the slope to the powerhouse, the most economical penstock placement is parallel to the road. Thus vertical alignment of the penstock is designed to match this maximum slope.

Table A-1 Penstock Segments

	Description	Slope length, feet	Material	Outer diameter, inches	Wall thickness, inches	Support type
1	Intake to air valve	1,034	HDPE	48	1.57	Buried
2	Air valve to tributary	361	HDPE	48	1.96	Buried
3	Across tributary	100	Steel	42	0.42	Saddles
4	Tributary to 75° bend	842	Ductile iron	44.5	0.41	Saddles
5	75° bend	67	Steel	42	0.42	Saddles
6	75° bend to 30° bend	279	Ductile iron	44.5	0.41	Buried
7	30° bend	9	Steel	42	0.42	Buried
8	30° bend to 135° bend	358	Ductile iron	44.5	0.41	Buried
9	135° bend	206	Steel	42	0.42	Buried
10	135° bend to Cl50 DI	247	Ductile iron	44.5	0.41	Buried
11	Cl50 DI to 60° bend	360	Ductile iron	44.5	0.47	Buried
12	60° bend to powerhouse	131	Steel	42	0.42	Buried

Penstock appurtenances include:

- Reducing sleeve couplings to transition between the various pipe types.
- Four manholes spaced approximately equally along the penstock length.
- An air release valve about 400 feet below the intake and on the north side of the bridge.
- A reducer near the powerhouse, terminating in a flange for connection of the turbine shutoff valve.

3.6 Powerhouse

The powerhouse is located near the Taiya Inlet shoreline, about 1,100 feet north of the mouth of Kasidaya Creek. The powerhouse is a prefabricated metal building, 28-foot-wide and 48-foot-long with a 20-foot eave height. The foundation is reinforced concrete with the floor at 30-foot elevation. The powerhouse is located behind a bedrock outcrop minimizing visibility from Taiya Inlet.

The powerhouse contains one 25” twin-jet Turgo-type turbine connected to a 3280 kW, 900 RPM, 0.8 air-cooled generator. The Turgo turbine is rated 4300 Hp with a net head of 521.4 ft and a rated flow of 88 cfs.

Auxiliary equipment in the powerhouse includes a control system for local and remote operation, a hydraulic power unit for operation of the turbine needle valves, a battery operated turbine

shutoff valve, a lube oil unit for the generator bearings, a bridge crane, a station battery and DC system for operation of critical equipment, and a station service AC power system.

The turbine discharges through an open channel tailrace approximately 160 feet long to Taiya Inlet. The tailrace passes through a naturally occurring gap in the bedrock outcrop that parallels the shoreline, which was enlarged and brought down to grade. In the inter-tidal section of the beach below the excavated tailrace, rock weirs control erosion of the cobble beach material.

3.7 Switchyard

A small switchyard is located adjacent to the powerhouse, consisting of a 3,750 kVA 34.9/4.16 kV main power transformer with an integral disconnect switch.

3.8 Transmission Line

The Project is inter-tied with an existing 34.5 kV submarine cable that connects the communities of Skagway and Haines. A 200-foot-long 34.5 kV cable runs underground from the switchyard to an existing submarine cable splice-vault where the interconnection takes place. A communication cable runs from the cable splice-vault to the powerhouse adjacent to the power cable. The existing splice-vault is located just above the high tide line of Taiya Inlet.

4.0 Permits and Licenses

October 1999 – Application submitted to FERC for a license.

October 2002 – FERC issues license for project P-11588.

May 2004 – FERC grants extension of time to begin construction.

March 2005 – DNR-Habitat issues Fish Habitat Permit FH04-I-0150.

June 2005 – Corp of Engineers issues permit #POA-1997-732-M.

July 2005 – DNR issues Early Entry Permit for tideland lease site.

October 2005 – Application submitted to amend license for project design changes.

October 2005 – USFS issues Special-Use Permit.

January 2006 – FERC issues license amendment for accessing the diversion site, tailrace length and marine access facility location design changes from the Oct. 2005 request.

January 2006 – Application submitted to amend the Phase II design from going overland to the diversion site on the north side of the creek to tunneling to the diversion site from the north side of the creek.

January 2006 – State Historical Preservation Officer (SHPO) finds "No Historic Properties Affected."

March 2006 – USFS approves Phase I design.

April 2006 – FERC Portland Regional Office approves Phase I design.

April 2006 – DNR issues early entry permit.

July 2006 – USFS amends Special-Use Permit for project name change from Otter Creek Hydro to Kasidaya Creek Hydro.

September 2006 – USFS approves Phase II design changes.

October 2006 – Corp of Engineers extends permit POA-1997-732-N expiration date to October 2009.

January 2007 – Application submitted to amend the Phase II design from tunnel diversion site access to place a bridge over Kasidaya Creek and access the diversion site from the south side of the creek.

May 2007 – Corp of Engineers application submitted to modify permit for Phase II design.

May 2007 – Application to DNR-Habitat Division submitted to modify permit for Phase II design.

May 2007 – DNR-Habitat Division issues modified habitat permit, #FH04-I-0150 Amendment B.

June 2007 – FERC issues a license amendment for Phase II design.

July 2007 – Corps of Engineers issues modified permit, #POA-1997-732-P, Taiya Inlet 32, for Phase II design.

5.0 Project Management

5.1 Organization

Alaska Power & Telephone utilized staff resources as much as possible to study, permit, design, procure, construct and commission the Kasidaya Hydro project. Staff engineers in civil, electrical, and mechanical disciplines have many years of experience in the hydroelectric industry. AP&T has also worked extensively with FERC and other government agencies developing other hydroelectric projects. Contract engineers provided additional expertise or third party review as necessary.

The organizational chart below shows the key project team members involved with project design, construction and quality control. A description of key member's role and responsibilities follows this section.

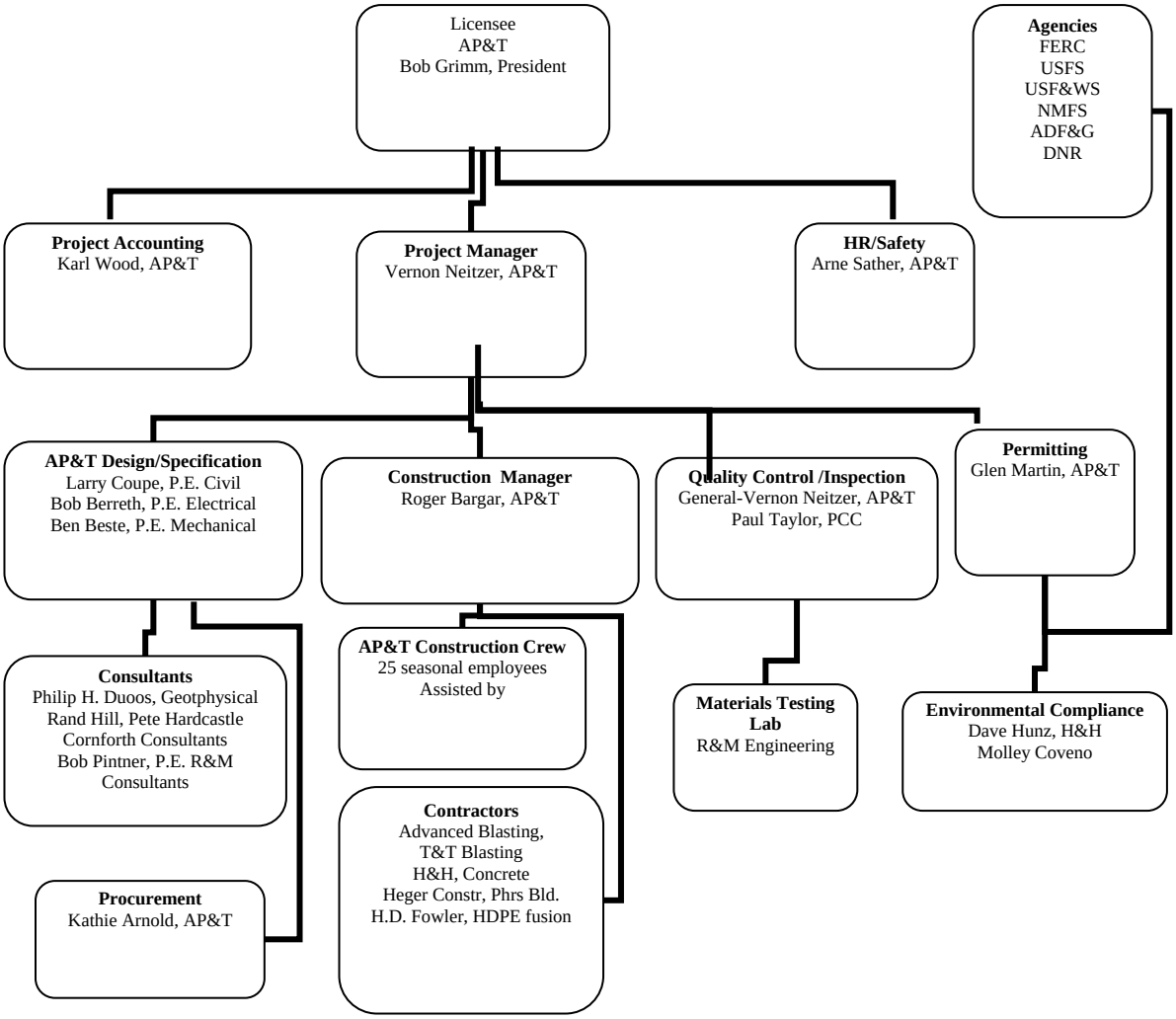

5.2 Key Design, Construction And Quality Control Personnel

Bob Grimm, President, CEO, AP&T Mr. Grimm has been responsible for aggressively leading AP&T in the development of environmentally clean, economically feasible, renewable energy in Alaska. Under his leadership, AP&T has reduced its dependence on fossil fuel from 95 percent to less than 20 percent since 1995. AP&T accomplished this by developing four new hydroelectric projects in Southeast Alaska. Additional projects are continually being evaluated as opportunities to reduce dependence on fossil fuels and provide savings to the end users.

Vernon Neitzer, Project Manager, AP&T Mr. Neitzer is the head of AP&T's engineering group and was responsible for overall management of the Kasidaya Hydroelectric project. His involvement dates back to the initial study, permitting and licensing period. As project manager,

he provided close review of the work and decisions of the design engineers and construction superintendent. Mr. Neitzer's home office is in Skagway enabling daily contact with the construction superintendent to keep abreast of every phase of the construction progress. He also worked directly with equipment installation and commissioning tasks.

Roger Bargar, Project Superintendent, AP&T Mr. Bargar was responsible for the day-to-day scheduling of the workforce which included marine transportation tasks, construction labor, contract labor, maintenance labor and contractors. Mr. Bargar worked closely with the AP&T engineering department, the environmental compliance monitor, suppliers and purchasing department to provide an orderly and efficient progression of the construction.

Larry Coupe, Civil Engineer, AP&T Mr. Coupe was responsible for the civil design and development of the civil drawings. He worked closely with FERC, USFS and other agencies to address all design review issues. He also communicated regularly with the project superintendent to provide design changes based on unforeseen field conditions. Mr. Coupe was responsible for specifications and procurement of major civil material and made numerous visits to the construction site.

Bob Berreth, Electrical Engineer, AP&T Mr. Berreth was responsible for the electrical design and development of the electrical drawings. He also provided specifications and procurement of all the electrical materials including the generator and turbine, switchgear, switchboard, building electrical, diversion dam control panel and SCADA. Mr. Berreth was responsible for commissioning of all electrical equipment and controls.

Ben Beste, Mechanical Engineer, AP&T Mr. Beste was responsible for mechanical design and development of mechanical drawings. He also provided the specification and procurement of mechanical equipment including the powerhouse crane, TSV, intake valve, Obermeyer and sluice gates. Mr. Beste spent considerable time on site for equipment installation oversight, commissioning and testing.

Glen Martin, Licensing & Permitting, AP&T Mr. Martin was responsible for FERC licensing, permit applications, development of environmental plans and regular communication with the on site project environmental compliance monitor (ECM). Mr. Martin closely followed the construction activities to ensure compliance with license articles and plans. He also submitted weekly compliance reports to the agencies and monthly construction reports to FERC.

Dave Hunz, Environmental Compliance Monitor, H&H Mr. Hunz was responsible for independent review and monitoring of project construction to ensure compliance with all the FERC license and project plan stipulations. Mrs. Coveno provided most of the on-site monitoring, with particular attention given to erosion and sedimentation control. At a minimum, she met weekly with the construction superintendent, made recommendations, gathered information, compiled field notes, took turbidity measurements and photographed construction details relating to permit requirements. Weekly reports were prepared for the agencies.

6.0 Project Cost

At the October 2002 initial FERC licensing, the estimated of total cost was budgeted at $6,960,000. This budget estimated direct construction cost of $5,700,000 with an additional $1,260,000 for licensing, permits, design and engineering. While arranging financing the total budget increased to $7,800,000.

By October 2003, when construction-funding agreements were reached, AP&T incurred costs of $847,479 for preliminary studies, permitting, site evaluation, and initial engineering. Increased demand for construction materials beginning in the autumn 2005 caused costs to escalate through project completion. This escalation required arranging additional funding in the summer of 2007.

At the close of major construction, costs were $10,897,230 with a total cost of $11,744,709. Funding and total cost of development are broken down below.

Department of Energy Grant	$4,806,839
Denali Commission Grant	4,500,000
Alaska Power & Telephone	1,930,565
Total Project Budget	$11,237,404

Preliminary Studies, Permitting	$847,479
Diversion / Intake	861,794
Power house/ Tailrace	2,376,112
Marine Access	79,110
Access Road	1,592,525
Penstock	1,717,844
Mobilization	2,243,589
Design & Permitting	871,680
Management	647,271
Total Project Cost	$11,237,404

7.0 Project Energy Production

The rated generator nameplate capacity is 3280kW. Initial operational testing was done on October 11, 2008. It restarted November 1 and ran for 21 days then another two days in December. Testing or commissioning was performed on the hydraulic and lube oil systems, generator controls, SCADA, plant cooling system, turbine inlet valve, diversion dam pneumatic system, sluice gate controls, spillway gate controls, intake valve controls and finally the penstock pressure test and leakage rate measurement. These tests revealed some details that will need to be addressed once the ice and snow that prevent operation have cleared the facilities.

8.0 Construction Photographs

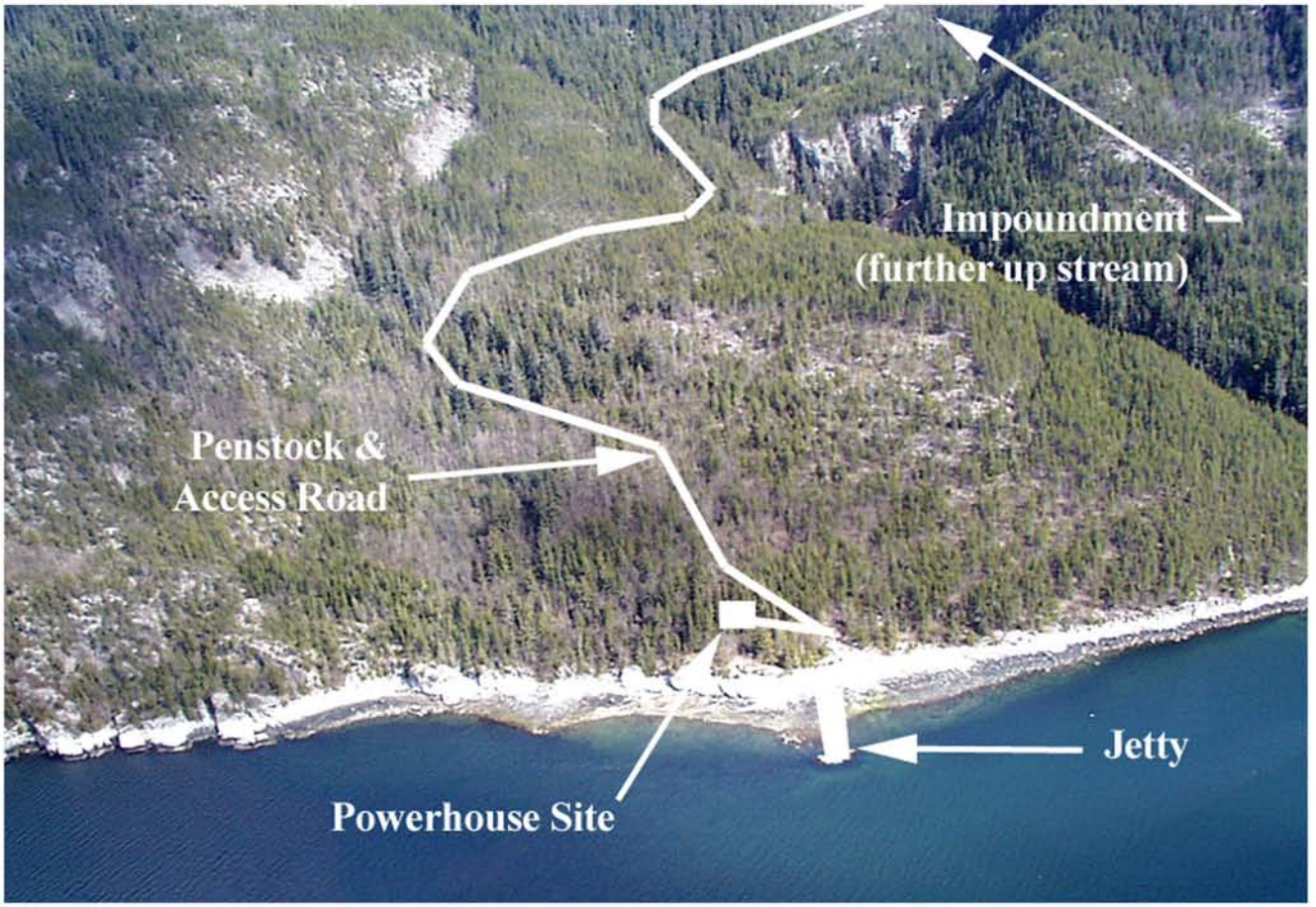

PRE-CONSTRUCTION PROPOSED PROJECT FEATURES & LOCATIONS

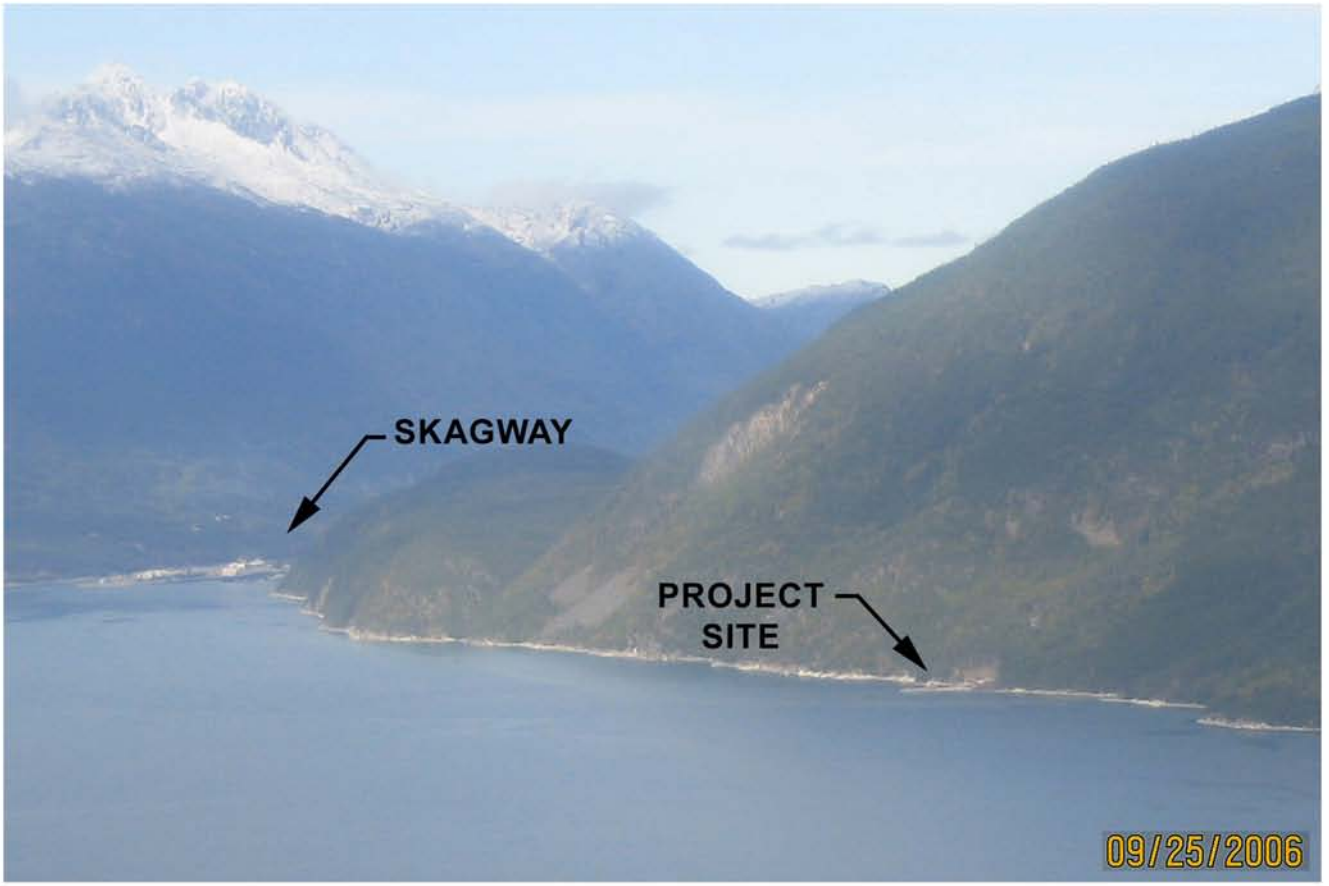

PROXIMITY OF PROJECT TO SKAGWAY ON TAIYA INLET

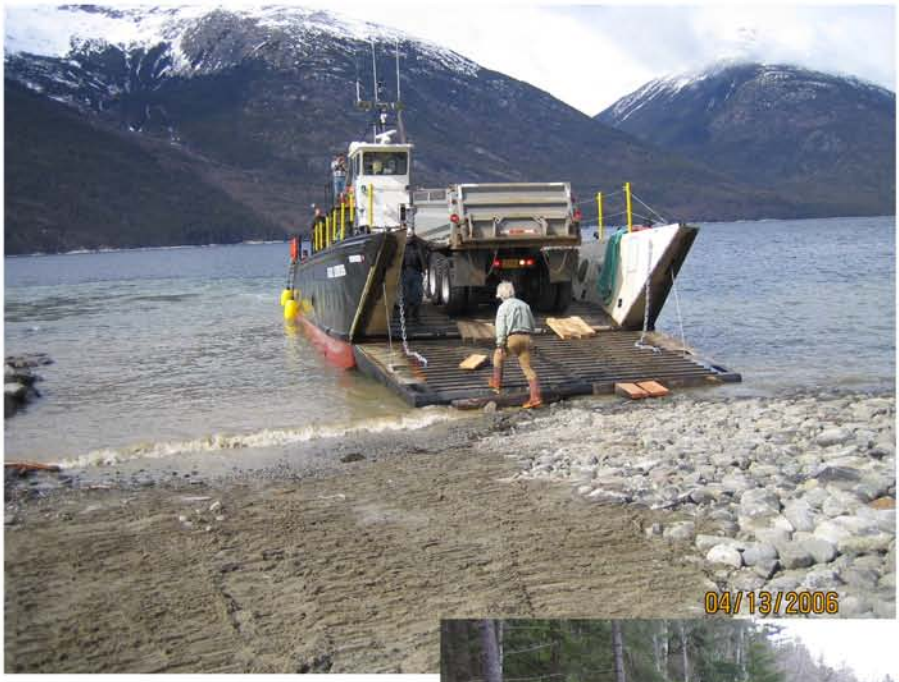

LCM-8 LANDING CRAFT BEGINS TRANSPORTING EQUIPMENT AND MATERIALS TO THIS ROADLESS LOCATION ALONG TAIYA INLET, THREE MILES SOUTH OF SKAGWAY

CLEARING OF THE RIGHT-OF-WAY UP TO ABOUT STA. 9+00

PIONEERED ROAD NEAR STA. 7+00

AERIAL VIEW OF RIGHT-OF-WAY PIONEERING UP TO ABOUT STA. 13+00

JETTY UNDER CONSTRUCTION USING LAYERS OF FILTER FABRIC BETWEEN LAYERS OF ROCK AND SAND

EXCAVATION OF THE POWERHOUSE SITE

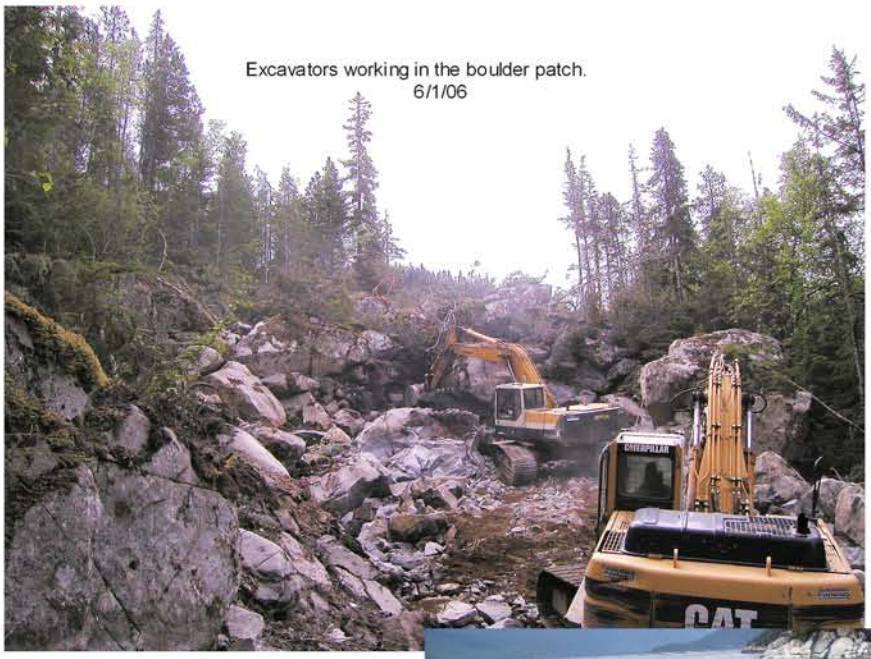

EXCAVATION OF BEDROCK RIDGE AT STA. 14+50

SEDIMENT TRAP ON BEACH TO CATCH RUNOFF FROM STAGING AREA & POWERHOUSE SITE

LCM-8 PROVIDED SIGNIFICANT SUPPORT DURING PROJECT CONSTRUCTION

STAGING AREA WITH OFFICE, FUEL STORAGE, & EMERGENCY SHELTER

LOOKING WEST FROM STA. 23+00 AT UPPER SPOILS STORAGE SITE

CREW BOAT WITH BOW RAMP WAS USED DAILY TO TRANSPORT THE CONSTRUCTION CREW TO & FROM THE SITE

POWERHOUSE FOUNDATION UNDER CONSTRUCTION

POWERHOUSE FOUNDATION UNDER CONSTRUCTION

EXCAVATION OF BEDROCK RIDGE AT STA. 25+00

CONCRETE POUR TAKING PLACE AT POWERHOUSE FOUNDATION AS VIEWED FROM NORTH END

POWERHOUSE FOUNDATION UNDER CONSTRUCTION AS VIEWED FROM NORTH END

POWERHOUSE FOUNDATION BEING FORMED

POWERHOUSE FOUNDATION BEING FORMED; NOTE HEATER USED TO HEAT FORMS & TO HELP CONCRETE CURE

EXCAVATOR LIFTED BUCKET OVER CONSTRUCTION FORMS TO POUR CONCRETE INTO HEATED FORMS

VIEW OF SOUTHEAST CORNER OF POWERHOUSE FOUNDATION; NOTE INSULATION & HEATER TO PROTECT CONCRETE CURING FROM FREEZING

POWERHOUSE FRAME BEING ERECTED ON FOUNDATION

HDPE PENSTOCK BEING HAULED OUT TO SITE ON LCM-8

INTERIOR OF POWERHOUSE INSTALLATION OF TURBINE HOUSING

GRATING IN POWERHOUSE FLOOR IS BEING SET

PREPARATIONS TO POUR CONCRETE FOR FLOORING ARE BEING MADE

STEEL PENSTOCK COMING DOWN SLOPE TO POWER-HOUSE; MANHOLE AT BOTTOM; THRUST BLOCK VISIBLE IN FRONT OF POWERHOUSE ALONG WITH TRANSFORMER FOUNDATION

POURING THRUST BLOCK ABOVE POWERHOUSE

SOUTH END OF POWERHOUSE COMPLETED WITH PENSTOCK COVERED & MANHOLE AT RIGHT SURROUNDED BY CONCRETE WALL TO PROTECT FROM BACKFILL

DUCTILE IRON PENSTOCK SEGMENT BEING MOVED INTO LOCATION AT STA. 3+25

DUCTILE IRON PENSTOCK IS COVERED BY POLYETHYLENE BARRIER BEFORE BURYING FOR CORROSION PROTECTION

STEEL PENSTOCK INSTALLATION ABOVE STA. 8+50

INSTALLATION OF PENSTOCK AT STA. 9+00 WITH THRUST BLOCK RECENTLY POURED

DRILLER PREPARING SITE FOR BLASTING OF BEDROCK AT CREEK CROSSING

PENSTOCK BEING BURIED AT ~STA . 14+50; IN THIS VIEW LOOKING UP SLOPE

PENSTOCK IS ENCASED IN CONCRETE UNDER THE ROAD AT ~STA. 14+50

NORTH BRIDGE FOOTING FRAME IS BEING CONSTRUCTED AT CREEK CROSSING

CONCRETE BEING POURED AT NORTH ABUTMENT OF BRIDGE; FROZEN CREEK IN FOREGROUND

LOOKING THROUGH NORTH ABUTMENT REBAR AT START OF SOUTH ABUTMENT CONSTRUCTION

THE CREW SLING LOADING CONCRETE OVER TO THE SOUTH BRIDGE ABUTMENT

WINTER CONDITIONS REQUIRE ACCESS CLEARING BEFORE EACH WORK DAY

SLUICEWAY FOUNDATION UNDER CONSTRUCTION; HEATERS HELP CURE THE CONCRETE

DIVERSION STRUCTURE
UNDER CONSTRUCTION

LOOKING FROM UPSTREAM
AT THE DIVERSION SITE
CONSTRUCTION

SOUTH END OF BRIDGE
OVER KASIDAYA CREEK

SLUICEWAY CONSTRUCTION

NORTH & SOUTH WALLS OF SPILLWAY UNDER CONSTRUCTION

BRIDGE DECKING HAS BEEN INSTALLED; STEEL PENSTOCK IS BEING INSTALLED NEXT TO THE BRIDGE ON THE SAME ABUTMENTS

BASE FOR SPILLWAY IS
STARTED FROM NORTH SIDE

INTAKE STRUCTURE IS
BEING FRAMED IN

SPILLWAY WITH "SUPER SACKS"
TO DIVERT FLOW THROUGH
SLUICEWAY

SPILLWAY BASE NEARS COMPLETION

PNEUMATIC SPILLWAY GATE BEING INSTALLED

BLADDER IN SPILLWAY GATE TEST-INFLATED

SLUICEWAY IN OPERATION

POURING CONCRETE
AROUND INTAKE
BELL MOUTH

CONSTRUCTION OF VALVE
HOUSE OVER INTAKE
STRUCTURE

THRUST BLOCK BEING FORMED AT ~STA. 16+00

GENERATOR INSTALLATION IN POWERHOUSE WITH LUBE OIL UNIT TO RIGHT, JUNE 2008

TAILRACE CONSTRUCTION; SILT FENCING IN PLACE TO KEEP FINE MATERIAL FROM ENTERING TAIYA INLET

POWERHOUSE NEAR COMPLETION

NORTH END OF POWERHOUSE WITH TAILRACE IN FOREGROUND

BRIDGE TO DIVERSION STRUCTURE

DUCTILE IRON PENSTOCK LAID OUT FOR INSTALLATION NEAR STA. 25+00; JUNE 2008

HDPE PENSTOCK FUSION MACHINE

HDPE PENSTOCK FUSION MACHINE IN ACTION

FUSED HDPE PENSTOCK FROM DIVERSION STRUCTURE TO BRIDGE WITH UNFUSED SECTIONS ON OPPOSITE SIDE

FUSED HDPE PENSTOCK IN TRENCH TO BE BURIED

HDPE PENSTOCK FUSION MACHINE IN OPERATION

BACKFILL MATERIAL
BEING PLACED
AROUND THE
HDPE PENSTOCK

DUCTILE IRON PENSTOCK
NEAR STA. 25+50 IN
BACKGROUND, STEEL
PENSTOCK IN FOREGROUND

DUCTILE IRON PENSTOCK
BELOW STA. 25+00 ON
CONCRETE SADDLES

SWITCHGEAR IN POWERHOUSE
BEING INSTALLED & TESTED

TURGO TURBINE RUNNER
& NEEDLE VALVE

TAILRACE DISCHARGING
WATER AFTER GOING
THROUGH THE PROJECT
TURBINE

9.0 Selected Project Drawing

CONTROL MONUMENTS			
CAP #	NORTHING	EASTING	ELEVATION
53	514,419.09	158,200.04	33.23
553	513,926.79	158,234.44	31.06
160	514,405.29	159,694.48	485.13

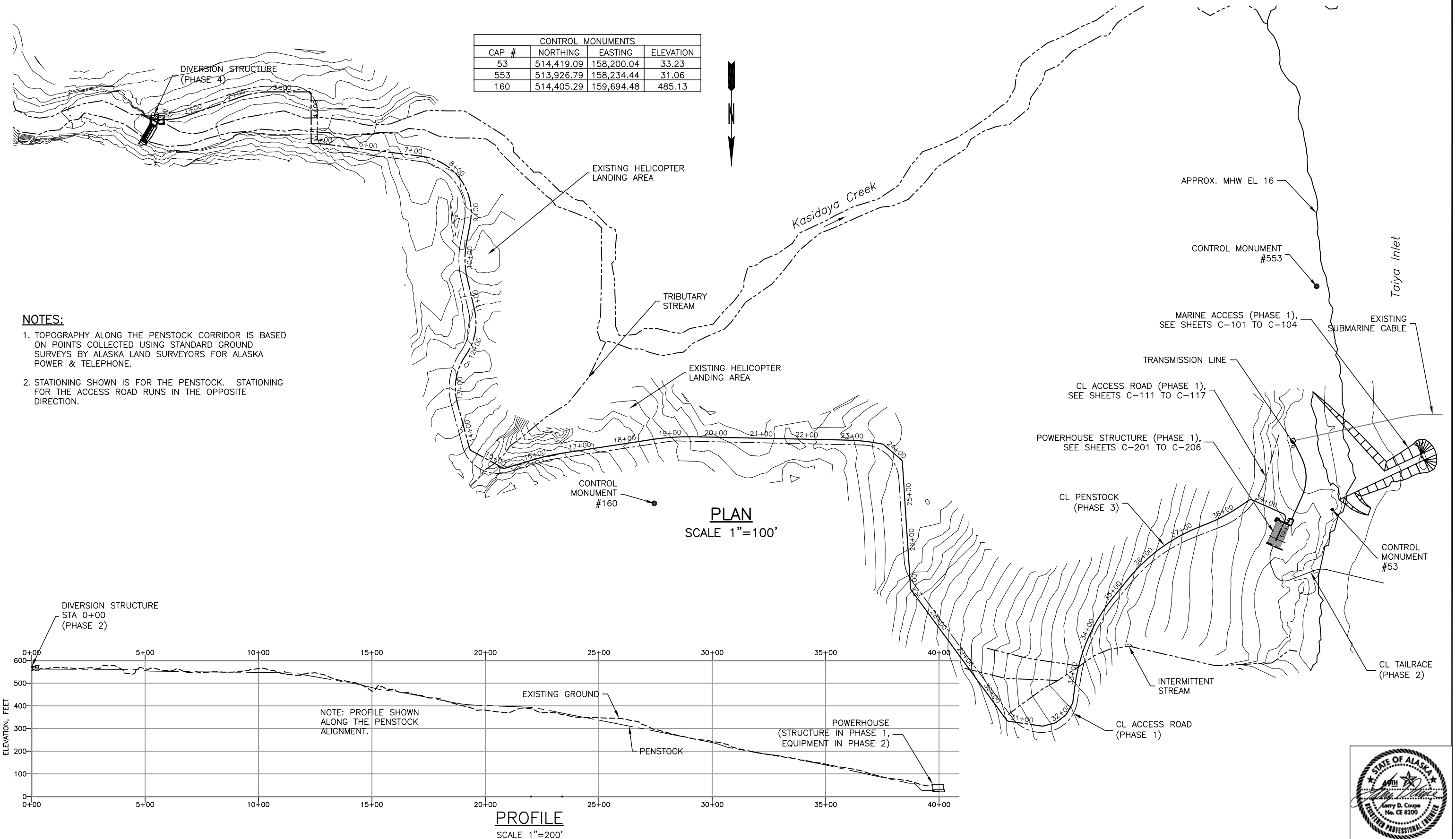

NOTES:

1. TOPOGRAPHY ALONG THE PENSTOCK CORRIDOR IS BASED ON POINTS COLLECTED USING STANDARD GROUND SURVEYS BY ALASKA LAND SURVEYORS FOR ALASKA POWER & TELEPHONE.
2. STATIONING SHOWN IS FOR THE PENSTOCK. STATIONING FOR THE ACCESS ROAD RUNS IN THE OPPOSITE DIRECTION.

PLAN
SCALE 1"=100'

PROFILE
SCALE 1"=200'

STATE OF ALASKA 49TH
Larry D. Coupe No. CE 8200
REGISTERED PROFESSIONAL ENGINEER

ISSUE NO.	DATE	DESCRIPTION	BY	CHK	APPR
B	10/20/07	FOR AGENCY REVIEW	LDC		
A	10/20/07	FOR INTERNAL REVIEW	LDC		

SCALE: AS SHOWN
DESIGNED: L. COUPE
DRAWN: L. LEMKE
CHECKED:

AP&T
ALASKA POWER & TELEPHONE COMPANY

100 0 100 200 FT
1" = 100'
200 0 200 400 FT
1" = 200'

KASIDAYA CREEK
HYDROELECTRIC PROJECT

GENERAL PLAN AND PROFILE

DATE: 10/20/2007
PROJECT NUMBER: 11588
SHEET NUMBER: G-002.1
ISSUE NO. B

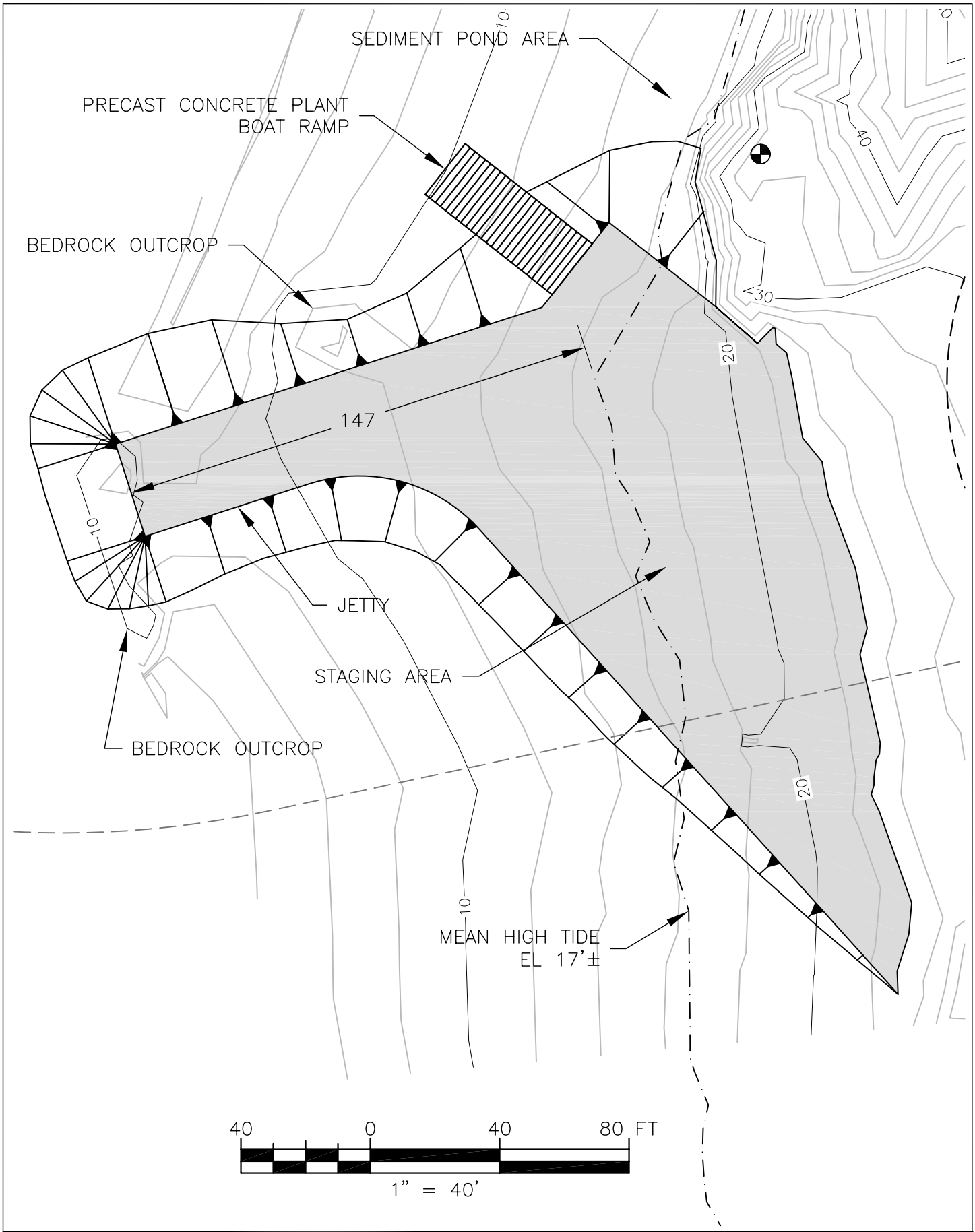

ALASKA POWER & TELEPHONE COMPANY

KASIDAYA CREEK HYDRO PROJECT
MARINE ACCESS
JETTY AS-BUILT

SHEET USCG-1

DATE NOV. 11, 2008

NOTES:

1. DESIGN FOR THE MODULAR BRIDGE IS BY BIG R MANUFACTURING FOR A U80 (80 TON) LIVE LOAD. BRIDGE FINISH IS A 3-COAT URETHANE COASTAL SYSTEM.
2. FIELD LOCATE BRIDGE ABUTMENTS TO SET NORTH ABUTMENT OUT OF NORMAL STREAM CHANNEL, TO MINIMIZE DISTANCE BETWEEN SOUTH ABUTMENT AND ROCK FACE, AND TO PROVIDE 49'-4' ℄ TO ℄ ANCHOR BOLTS FOR BIG R BRIDGE.
3. REPAIR DAMAGE TO THE BIG R BRIDGE COATING IN ACCORDANCE WITH BIG R RECOMMENDATIONS. REPAIR AND/OR APPLY AN EQUIVALENT COATING TO ALL OTHER STEEL BRIDGE MEMBERS.

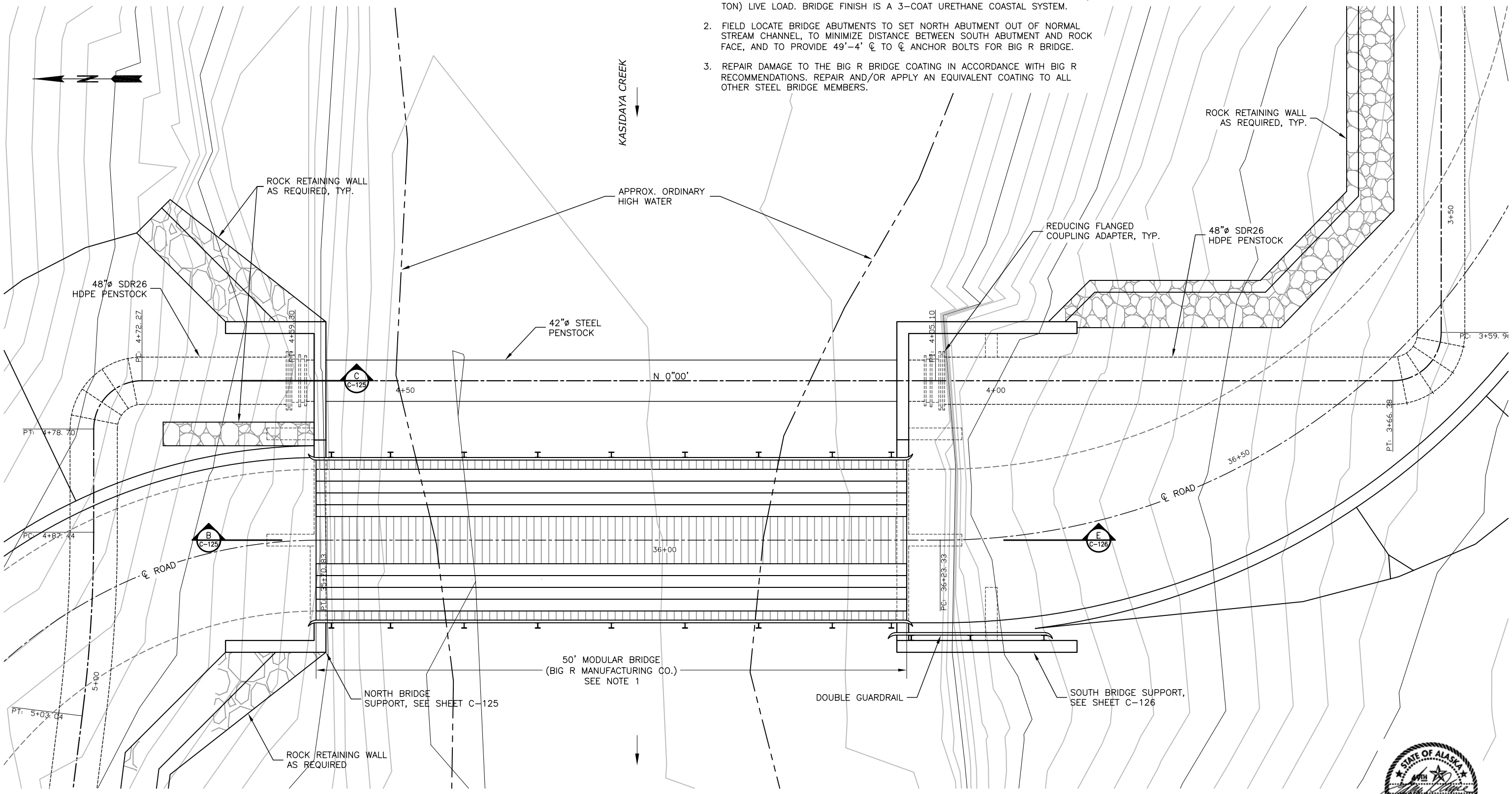

STATE OF ALASKA 49TH Larry D. Coupe No. CE 8200 REGISTERED PROFESSIONAL ENGINEER

NO	DATE	DESCRIPTION	BY	CHK	APPR
B4	1/15/08	CHG. SOUTH ABUT. TO COUNTERFORT WALL	LDC		
B3	10/19/07	REVISED GENERAL NOTE RE COATINGS	LDC		
B2	10/8/07	REVISED NORTH BRIDGE SUPPORT	LDC		
B	9/14/07	FOR AGENCY REVIEW	LDC		

SCALE: 1/4"=1'-0"
DESIGNED: L. COUPE
DRAWN: L. LEMKE
CHECKED:

AP&T
ALASKA POWER & TELEPHONE COMPANY

4 0 4 8 FT
1/4" = 1'-0"

KASIDAYA CREEK
HYDROELECTRIC PROJECT
ACCESS ROAD EXTENSION BRIDGE PLAN

DATE: 1/15/2008
PROJECT NUMBER: 11588
SHEET NUMBER: C-124
ISSUE NO. B4

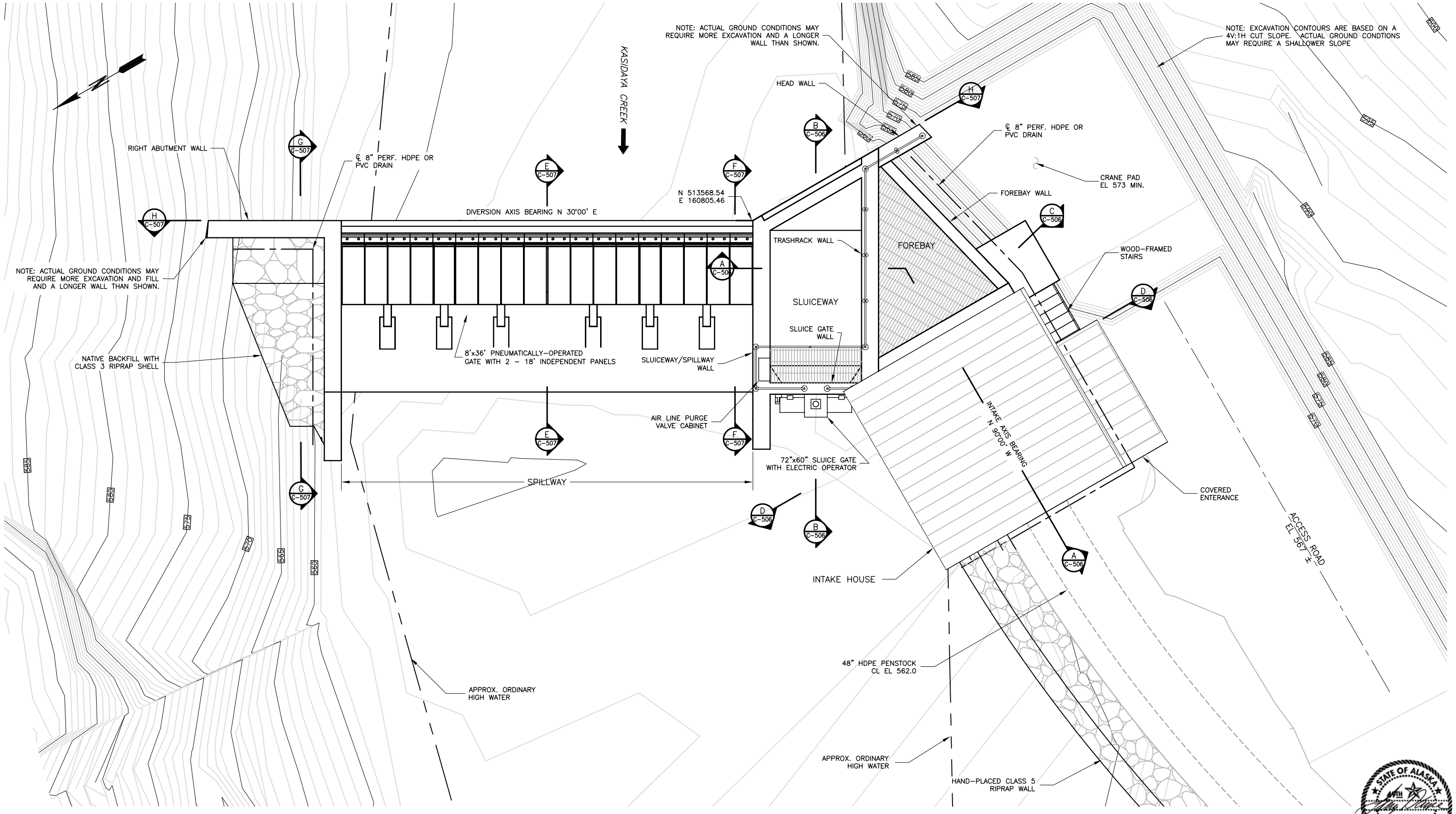

ISSUE NO.	DATE	DESCRIPTION	BY	CHK	APPR
B	10/20/07	FOR AGENCY REVIEW	LDC		
A	10/20/07	FOR INTERNAL REVIEW	LDC		

SCALE: 1/4"=1'-0"
DESIGNED: L COUPE
DRAWN: L LEMKE
CHECKED:

AP&T
ALASKA POWER & TELEPHONE COMPANY

4 0 4 8 FT
1/4" = 1'-0"

KASIDAYA CREEK
HYDROELECTRIC PROJECT

DIVERSION STRUCTURE SITE PLAN

DATE: 1/25/2008
PROJECT NUMBER: 11588
SHEET NUMBER: C-501
ISSUE NO. C

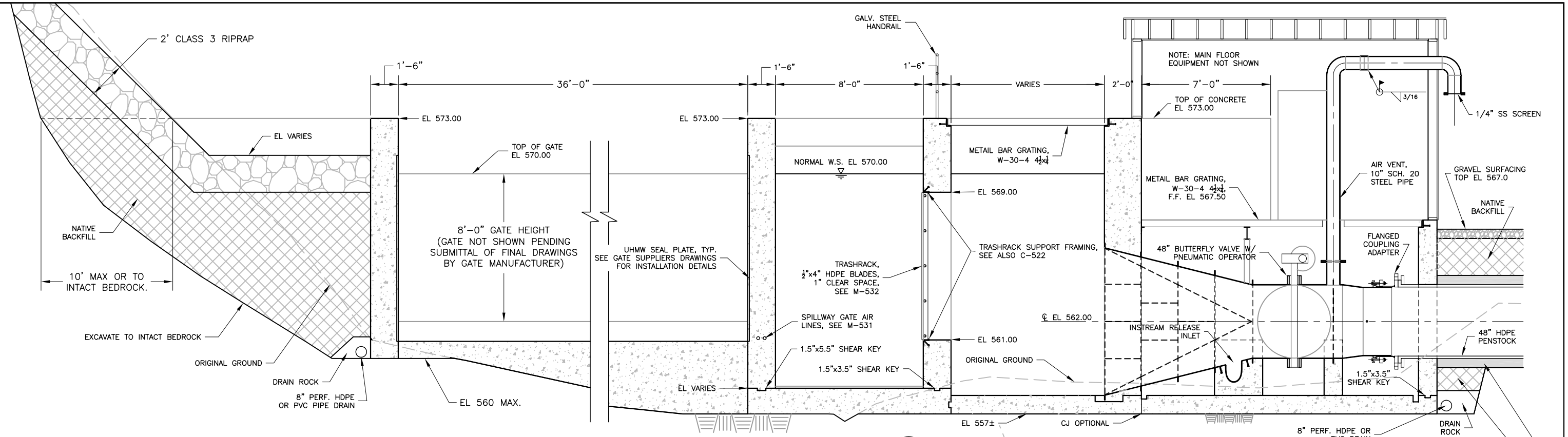

SECTION A
3/8"-1'-0"
C-501

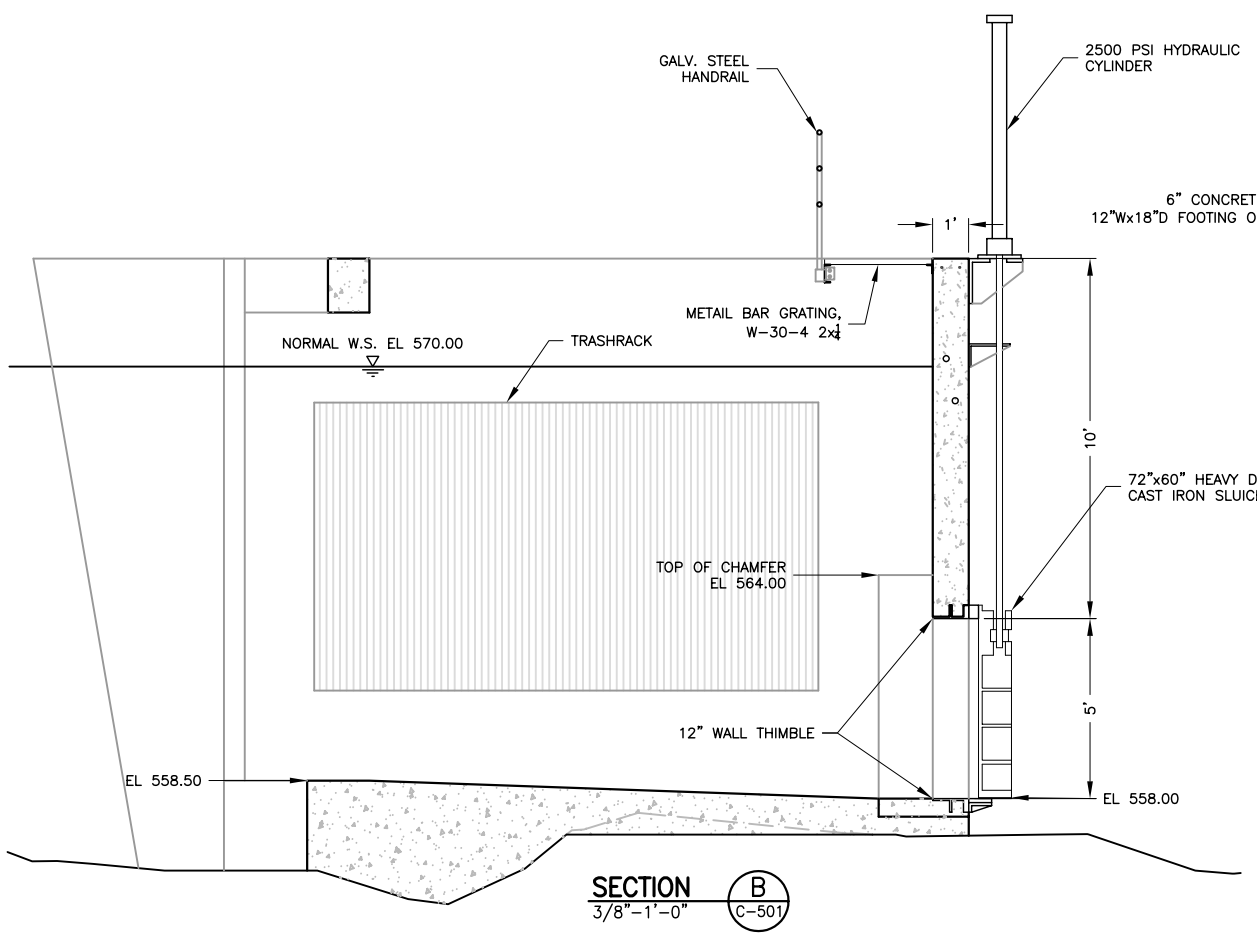

SECTION B
3/8"-1'-0"
C-501

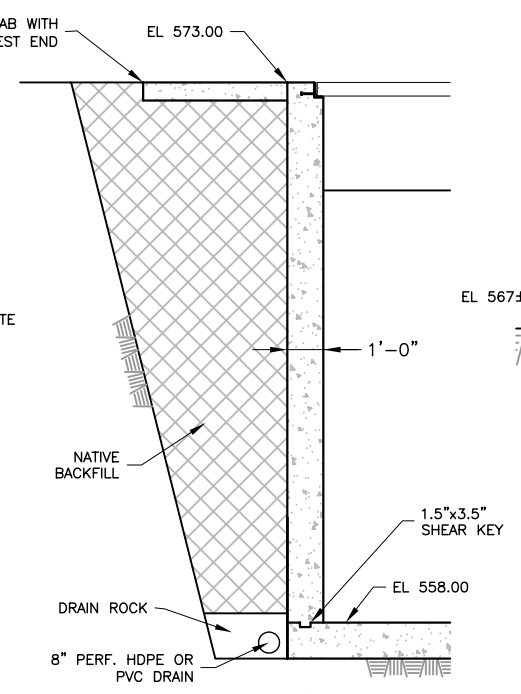

SECTION B
3/8"-1'-0"
C-501

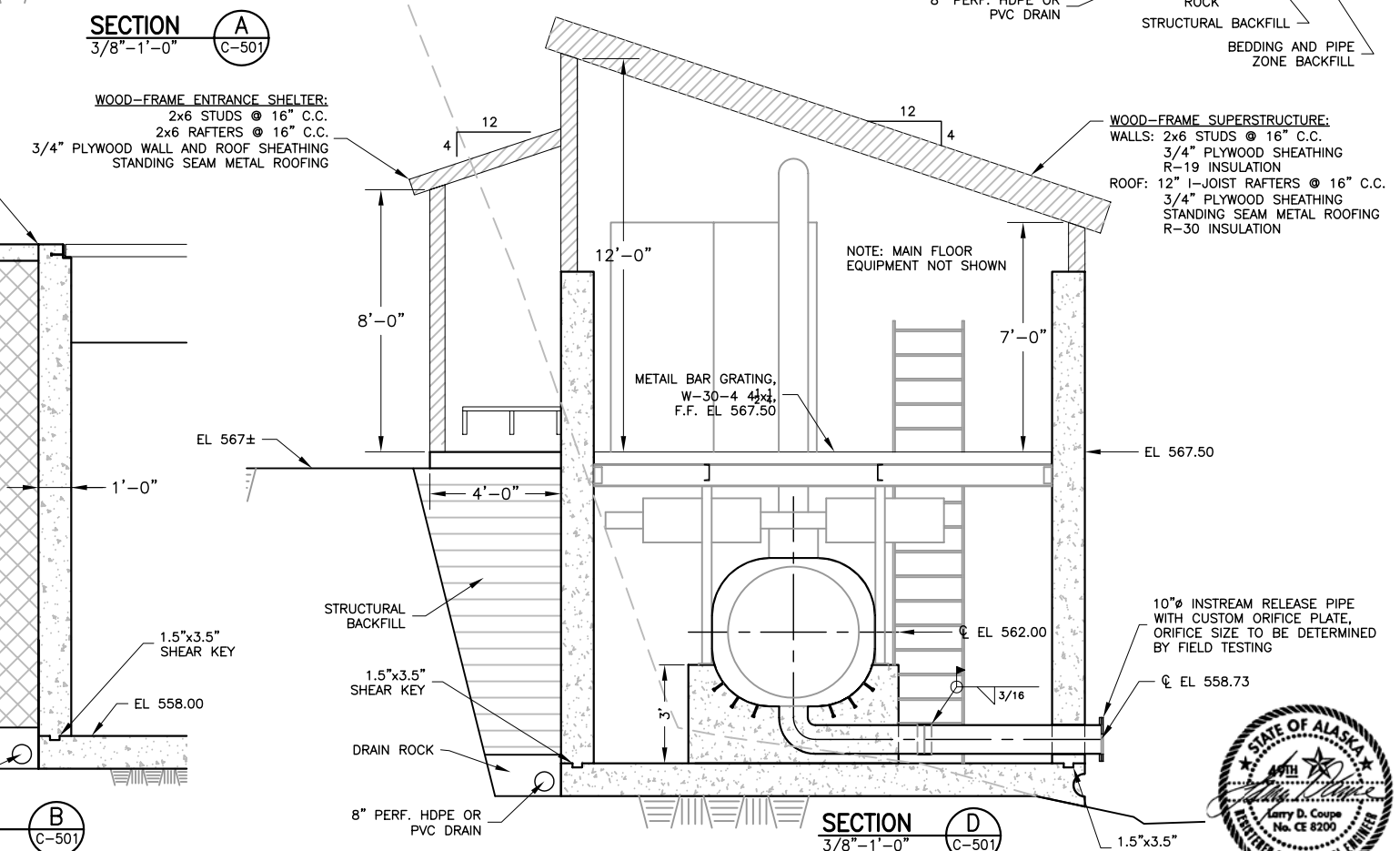

SECTION D
3/8"-1'-0"
C-501

STATE OF ALASKA 49TH
Larry D. Coupe No. CE 8205
REGISTERED PROFESSIONAL ENGINEER

ISSUE NO.	DATE	DESCRIPTION	BY	CHK	APPR
B	10/20/07	FOR AGENCY REVIEW	LDC		
A	10/20/07	FOR INTERNAL REVIEW	LDC		

SCALE: 3/8"=1'-0"
DESIGNED: L COUPE
DRAWN: L LEMKE
CHECKED:

AP&T
ALASKA POWER & TELEPHONE COMPANY

3 0 3 6 FT
3/8" = 1'-0"

KASIDAYA CREEK
HYDROELECTRIC PROJECT
DIVERSION STRUCTURE GENERAL ARRANGEMENT SECTIONS, SHEET 1 OF 2

DATE: 10/20/2007
PROJECT NUMBER: 11588
SHEET NUMBER: C-506
ISSUE NO. B

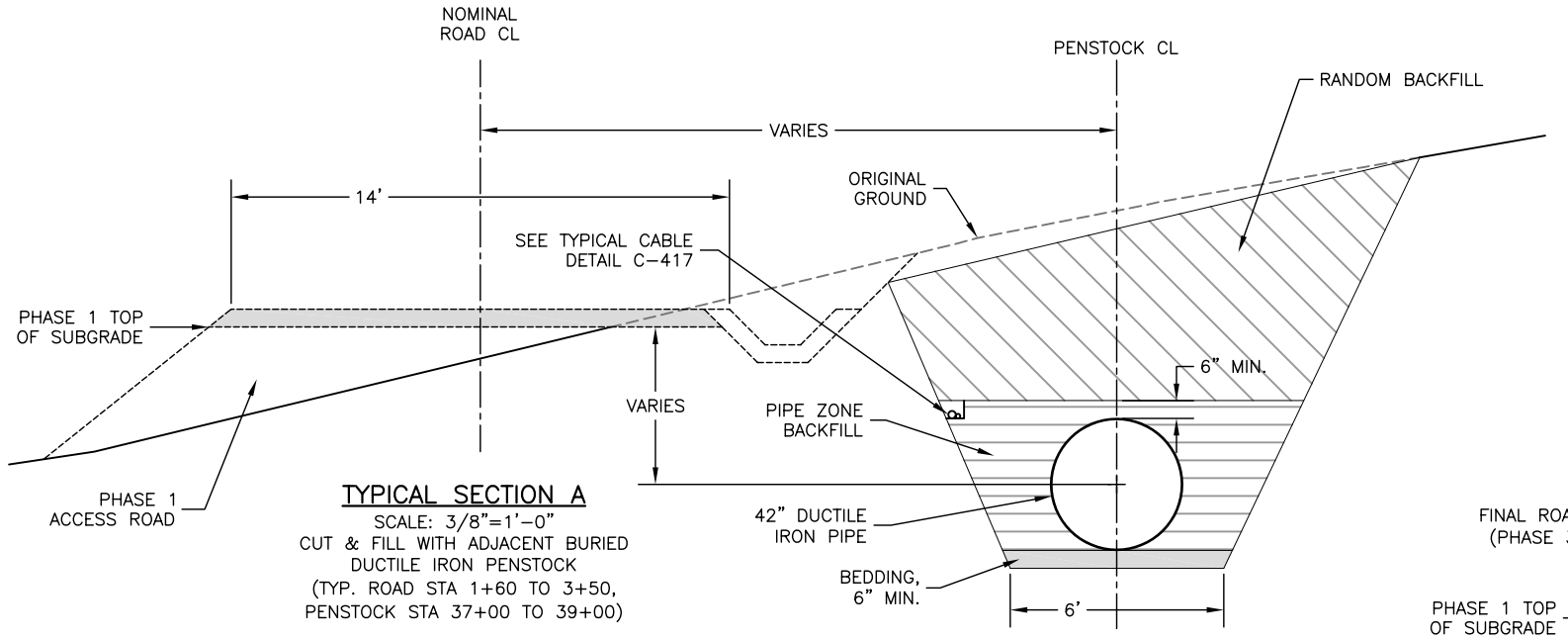

TYPICAL SECTION A
SCALE: 3/8"=1'-0"
CUT & FILL WITH ADJACENT BURIED DUCTILE IRON PENSTOCK
(TYP. ROAD STA 1+60 TO 3+50, PENSTOCK STA 37+00 TO 39+00)

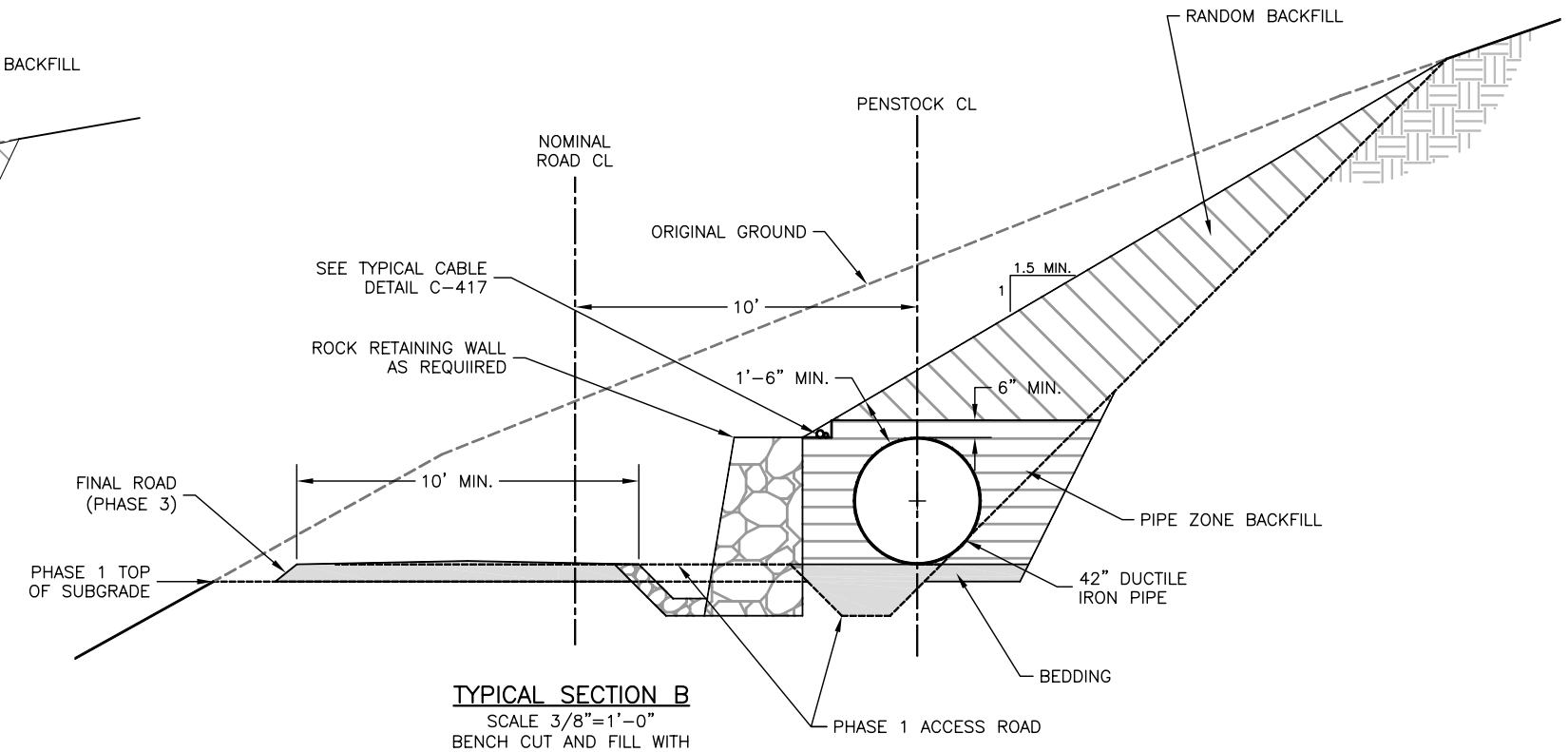

TYPICAL SECTION B
SCALE 3/8"=1'-0"
BENCH CUT AND FILL WITH ADJACENT BURIED PENSTOCK
(TYP. ROAD STA 3+50 TO 7+50, PENSTOCK STA 32+80 TO 37+00)

NOTE: PLACE GEOTEXTILE FABRIC BETWEEN PIPE ZONE BACKFILL AND ROCK RETAINING WALLS.

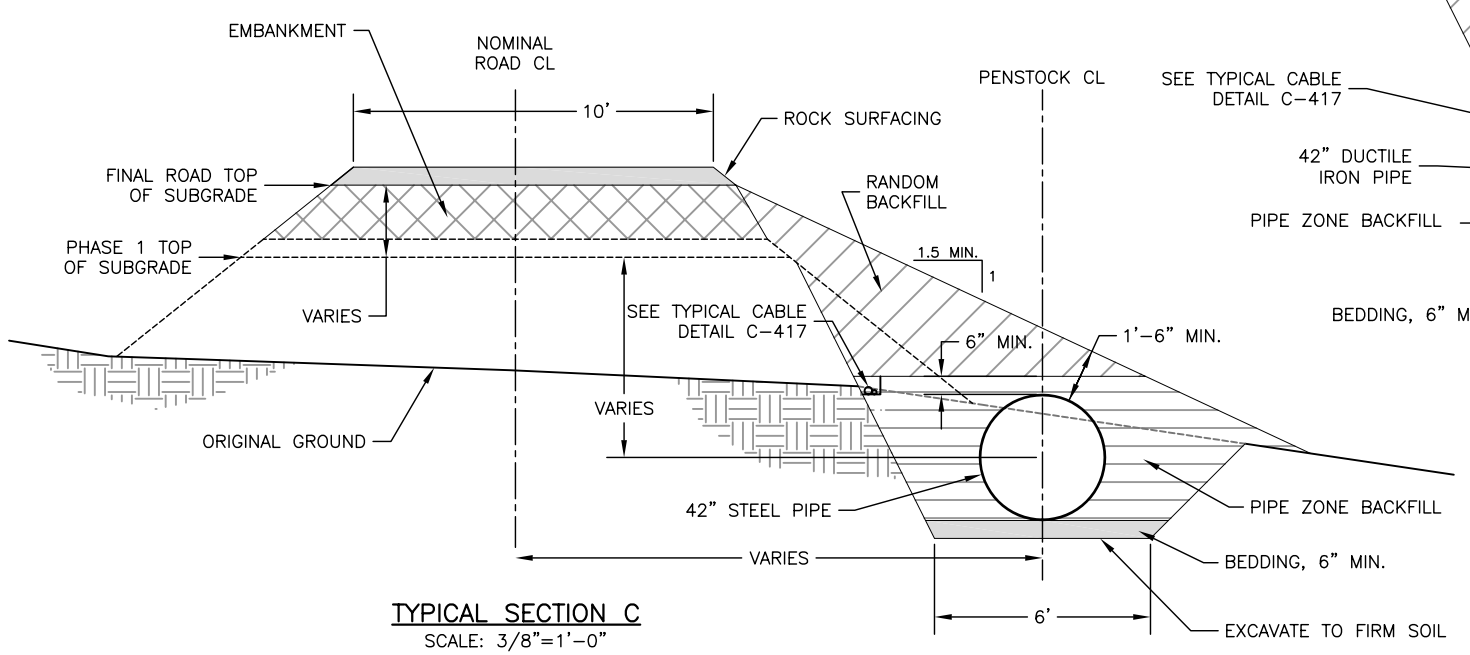

TYPICAL SECTION C
SCALE: 3/8"=1'-0"
FILL WITH ADJACENT BURIED PENSTOCK
(TYP. ROAD STA 7+50 TO 9+50, PENSTOCK STA 31+10 TO 32+80)

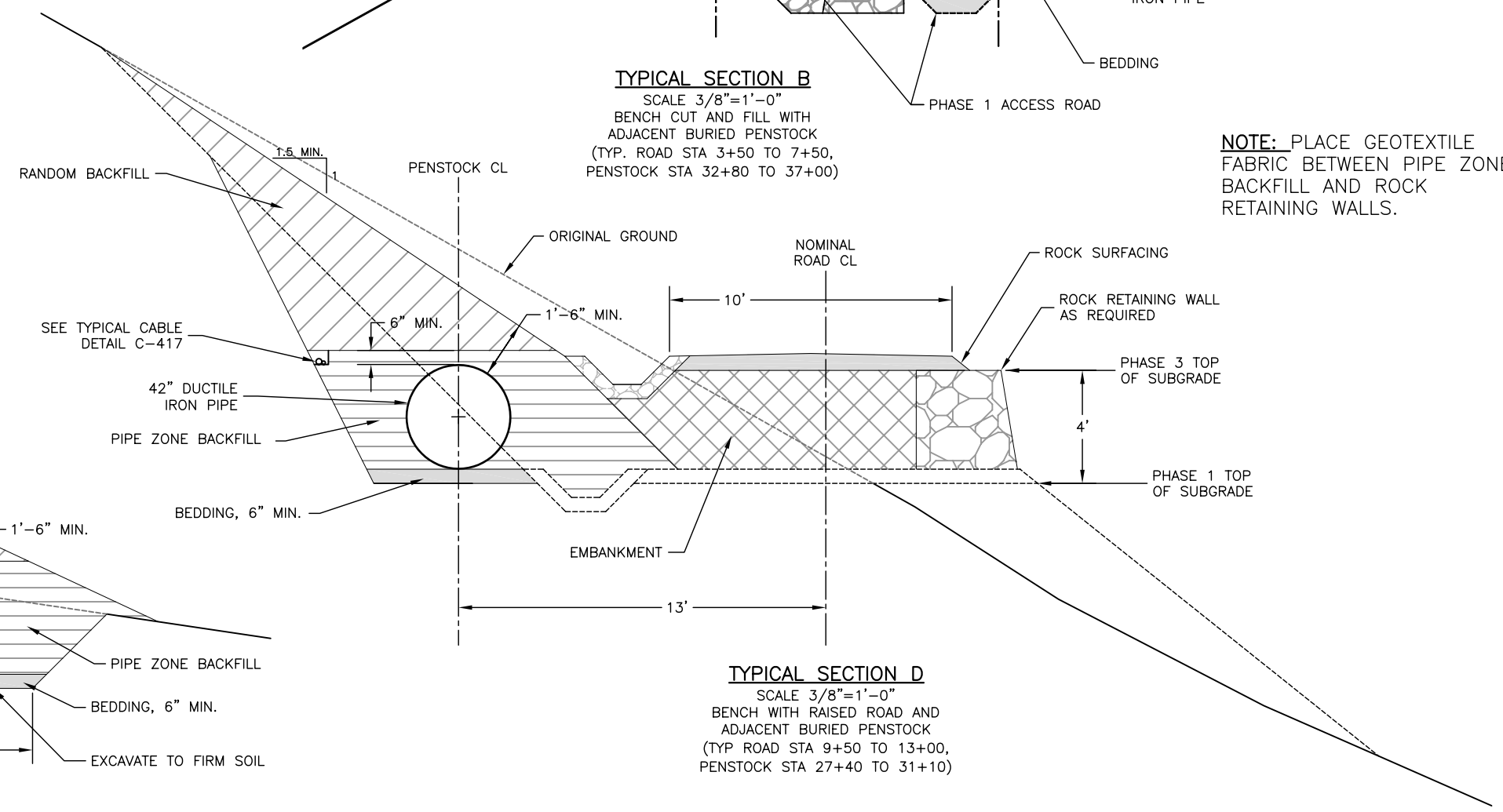

TYPICAL SECTION D
SCALE 3/8"=1'-0"
BENCH WITH RAISED ROAD AND ADJACENT BURIED PENSTOCK
(TYP ROAD STA 9+50 TO 13+00, PENSTOCK STA 27+40 TO 31+10)

ISSUE NO.	DATE	DESCRIPTION	BY	CHK	APPR
B2	6/11/07	MODIFIED PIPE ZONE BACKFILL	LDC		
B	3/26/07	FOR AGENCY REVIEW	LDC		

SCALE: AS SHOWN
DESIGNED: L. COUPE
DRAWN: L. LEMKE
CHECKED:

AP&T
ALASKA POWER & TELEPHONE COMPANY

3 0 3 6 FT
3/8" = 1'-0"
1 0 1 2 3 FT
3/4" = 1'-0"

KASIDAYA CREEK
HYDROELECTRIC PROJECT
PENSTOCK AND FINAL ROAD TYPICAL SECTIONS
SHEET 1 OF 3

DATE: 6/11/2007
PROJECT NUMBER: 11588
SHEET NUMBER: C-415
ISSUE NO. B2

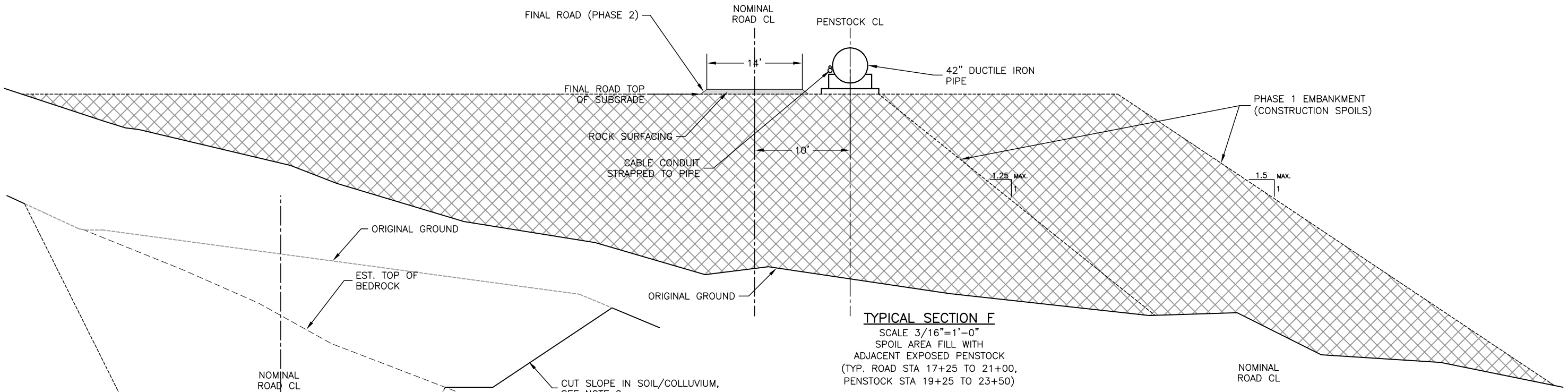

TYPICAL SECTION F

SCALE 3/16"=1'-0"
SPOIL AREA FILL WITH
ADJACENT EXPOSED PENSTOCK
(TYP. ROAD STA 17+25 TO 21+00,
PENSTOCK STA 19+25 TO 23+50)

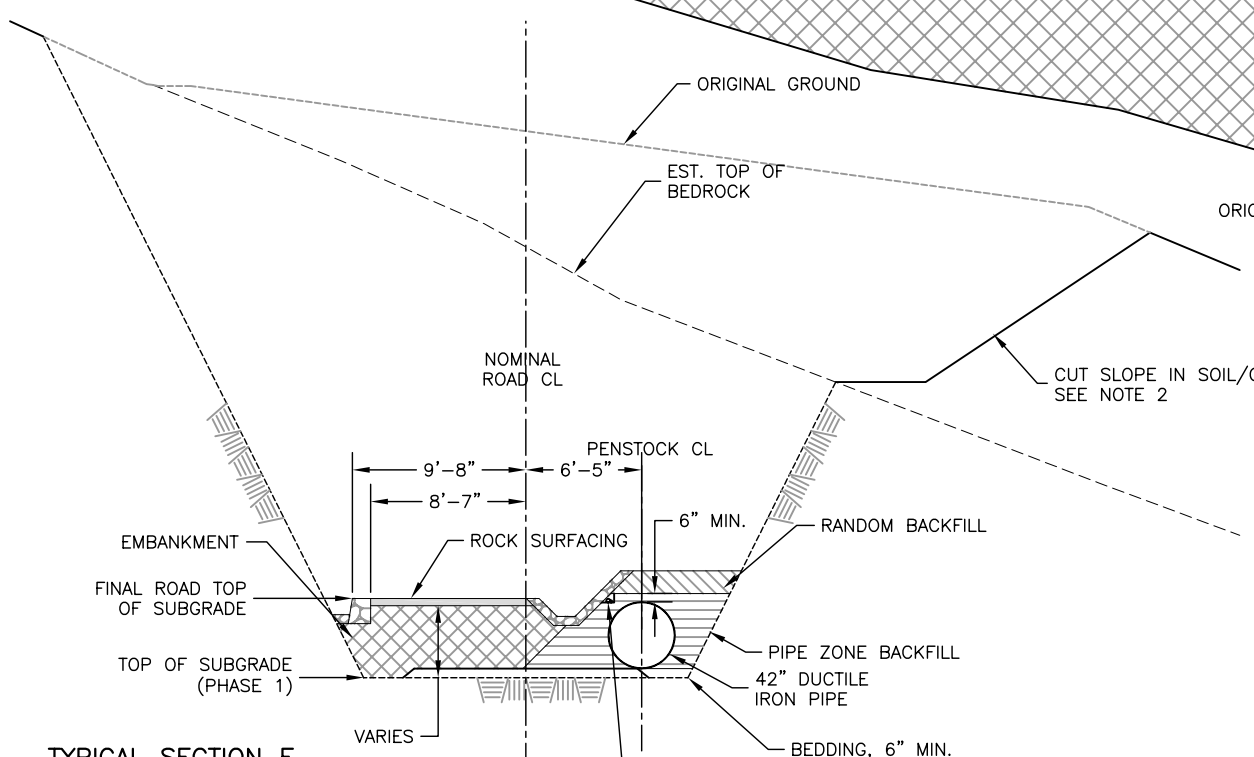

TYPICAL SECTION E

SCALE 3/16"=1'-0"
TRENCH CUT IN BEDROCK WITH
ADJACENT EXPOSED PENSTOCK
(TYP. ROAD STA 13+00 TO 17+25,
PEN STA. 27+40 TO 23+50)

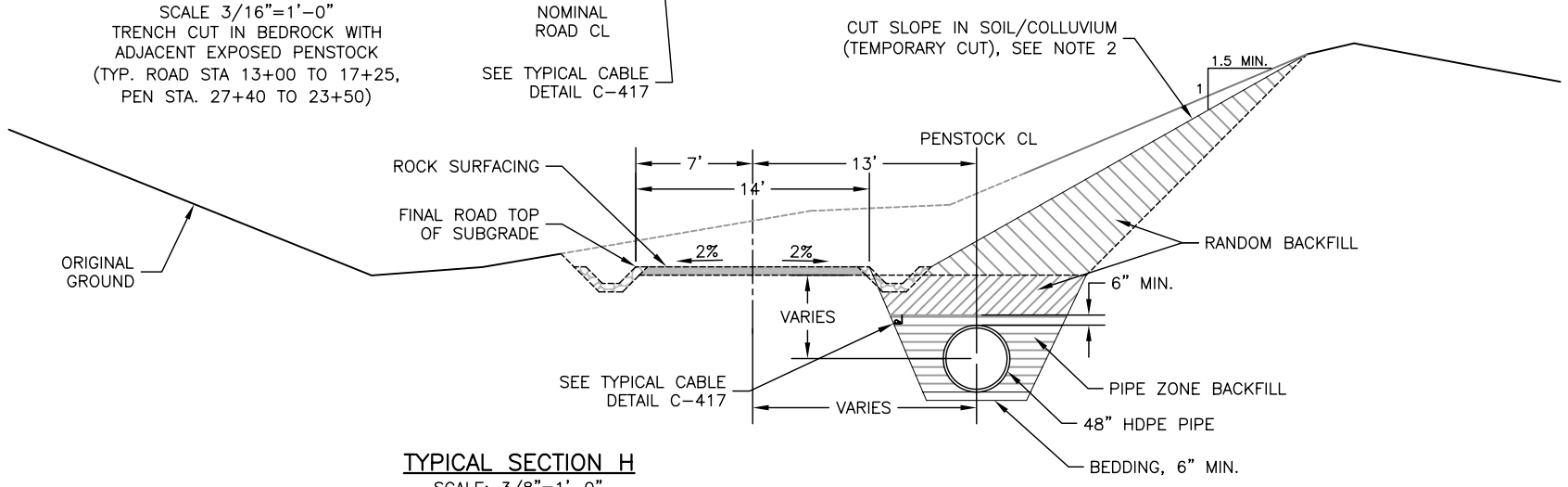

TYPICAL SECTION H

SCALE: 3/8"=1'-0"
TRENCH IN SOIL WITH
ADJACENT BURIED PENSTOCK
(TYP. ROAD STA 26+00 TO 28+50; 29+50 TO 31+00
PENSTOCK STA 11+60 TO 14+50; 9+50 TO 11+60)

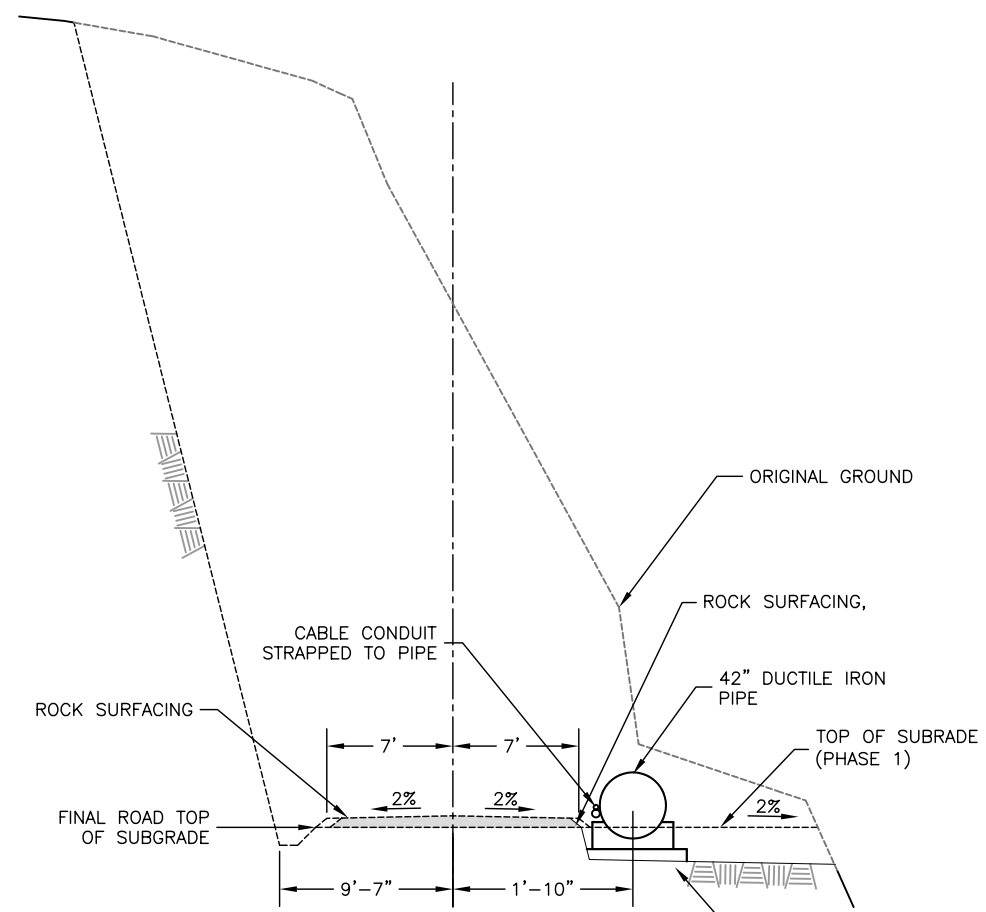

TYPICAL SECTION G

SCALE 3/16"=1'-0"
BENCH CUT IN BEDROCK WITH
ADJACENT EXPOSED PENSTOCK
(TYP. ROAD STA 21+00 TO 25+00,
PENSTOCK STA 15+40 TO 19+25)

ISSUE NO.	DATE	DESCRIPTION	BY	CHK	APPR
B2	6/11/07	MODIFIED PIPE ZONE BACKFILL	LDC		
B	3/26/07	FOR AGENCY REVIEW	LDC		

SCALE: AS SHOWN
DESIGNED: L. COUPE
DRAWN: L. LEMKE
CHECKED:

AP&T
ALASKA POWER & TELEPHONE COMPANY

6 0 6 12 FT
3/16" = 1'-0"

KASIDAYA CREEK
HYDROELECTRIC PROJECT
PENSTOCK AND FINAL ROAD TYPICAL SECTIONS SHEET 2 OF 3

DATE: 6/11/2007
PROJECT NUMBER: 11588
SHEET NUMBER: C-416
ISSUE NO. B2

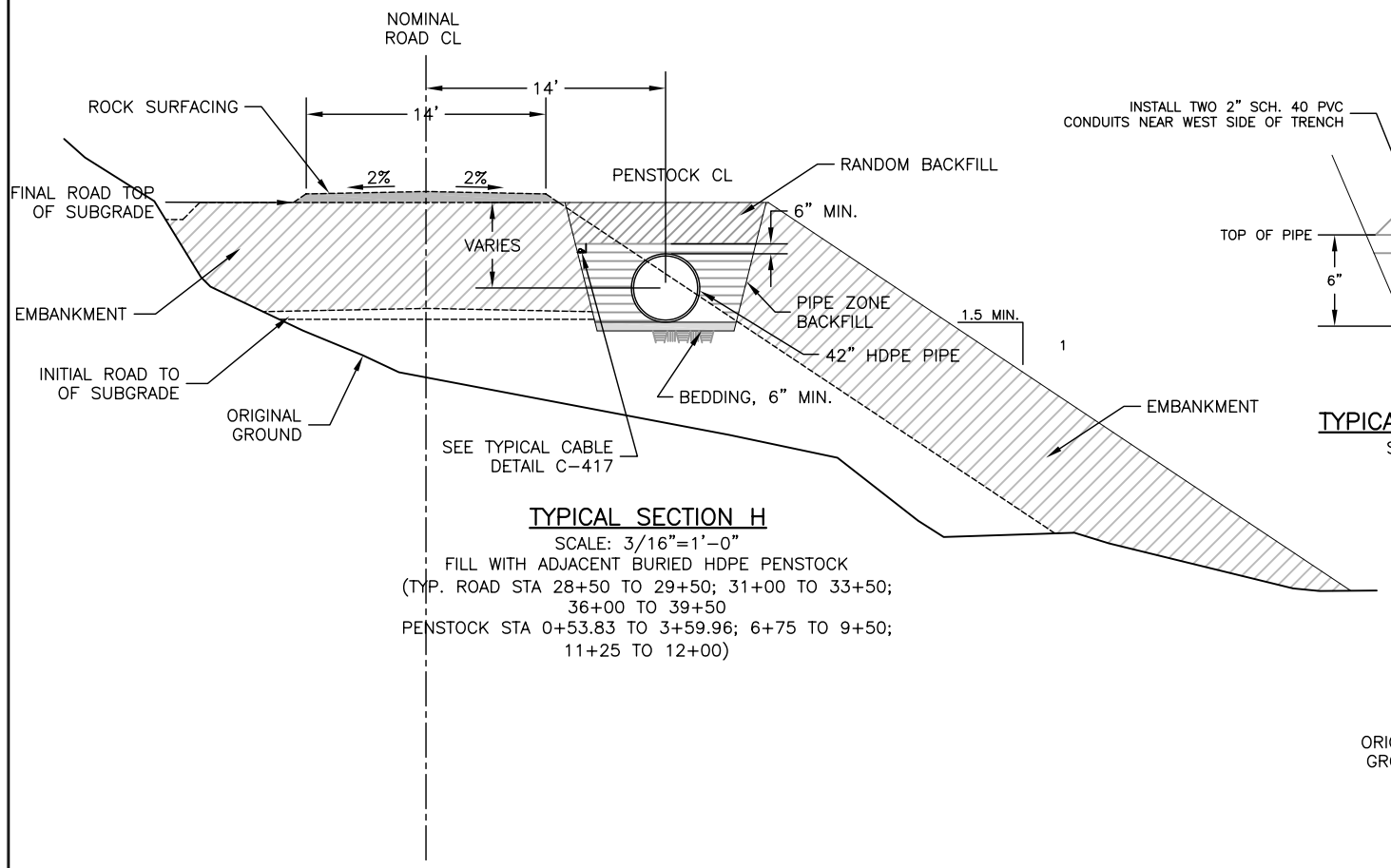

TYPICAL SECTION H

SCALE: 3/16"=1'-0"
FILL WITH ADJACENT BURIED HDPE PENSTOCK
(TYP. ROAD STA 28+50 TO 29+50; 31+00 TO 33+50;
36+00 TO 39+50
PENSTOCK STA 0+53.83 TO 3+59.96; 6+75 TO 9+50;
11+25 TO 12+00)

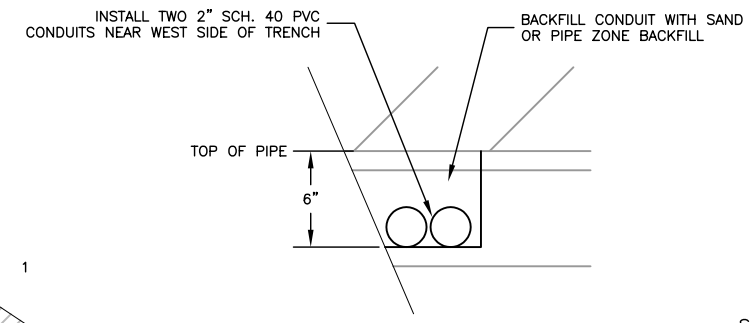

TYPICAL CABLE TRENCH

SCALE: 1"=0'-6"

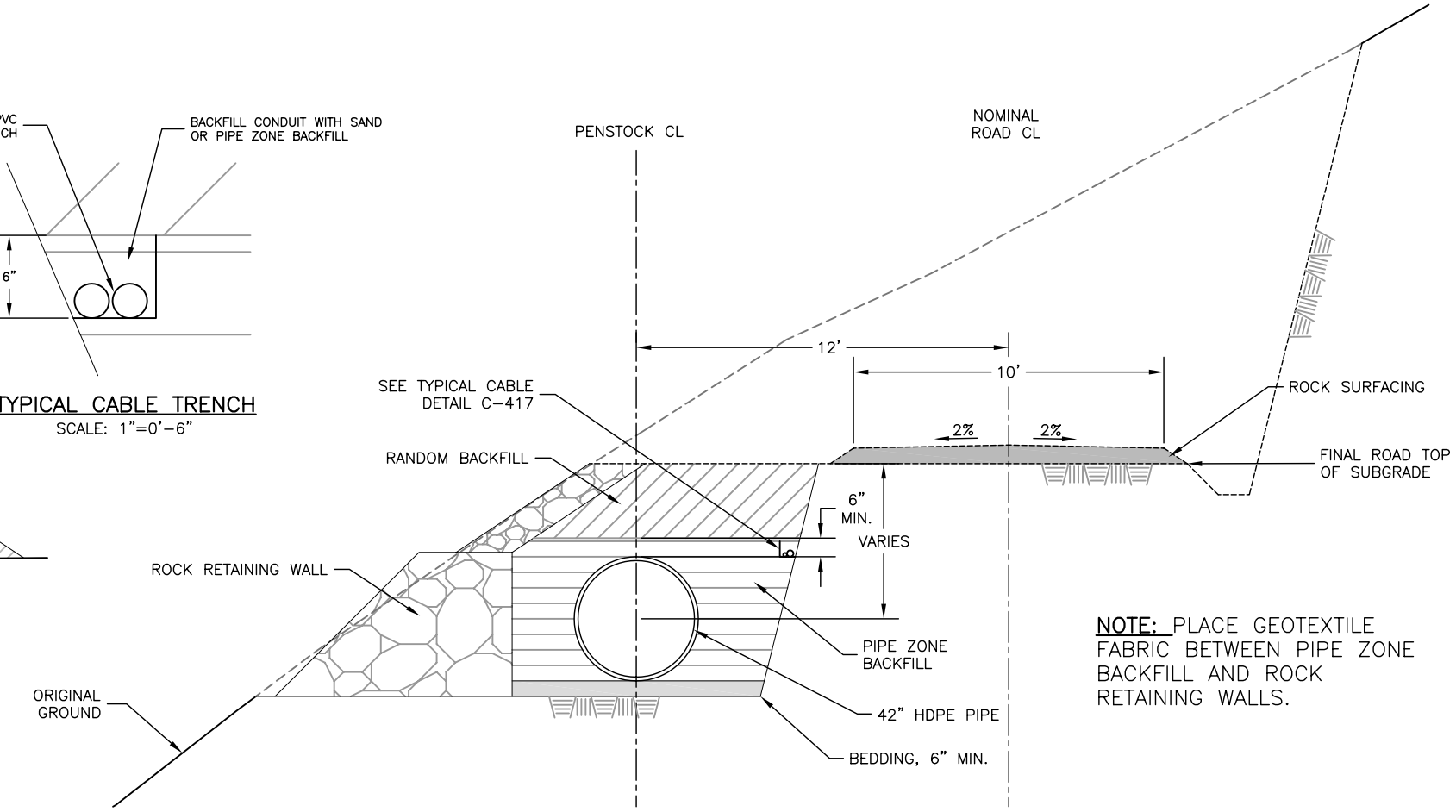

NOTE: PLACE GEOTEXTILE FABRIC BETWEEN PIPE ZONE BACKFILL AND ROCK RETAINING WALLS.

TYPICAL SECTION I

SCALE: 3/8"=1'-0"
BENCH WITH ADJACENT BURIED HDPE PENSTOCK
(TYP. ROAD STA 33+50 TO 35+50; 36+50 TO 40+00 [SIM.],
PENSTOCK STA 0+00 TO 3+60; 5+00 TO 6+75 [SIM.])

ISSUE NO.	DATE	DESCRIPTION	BY	CHK	APPR
B2	6/1/07	MODIFIED PIPE ZONE BACKFILL	LDC		
B	3/26/07	FOR AGENCY REVIEW	LDC		

SCALE: AS SHOWN
DESIGNED: L. COUPE
DRAWN: L. LEMKE
CHECKED:

AP&T
ALASKA POWER & TELEPHONE COMPANY

3 0 3 6 FT
3/8" = 1'-0"
6 0 6 12 FT
3/16" = 1'-0"

KASIDAYA CREEK
HYDROELECTRIC PROJECT
PENSTOCK AND FINAL ROAD TYPICAL SECTIONS SHEET 3 OF 3

DATE: 6/11/2007
PROJECT NUMBER: 11588
SHEET NUMBER: C-417
ISSUE NO. B2

NOTE: GATE ARRANGEMENT SHOWN IS BASED ON PRELIMINARY INFORMATION FROM THE GATE SUPPLIER, AND MAY BE MODIFIED DURING FINAL GATE DESIGN BY THE GATE SUPPLIER.

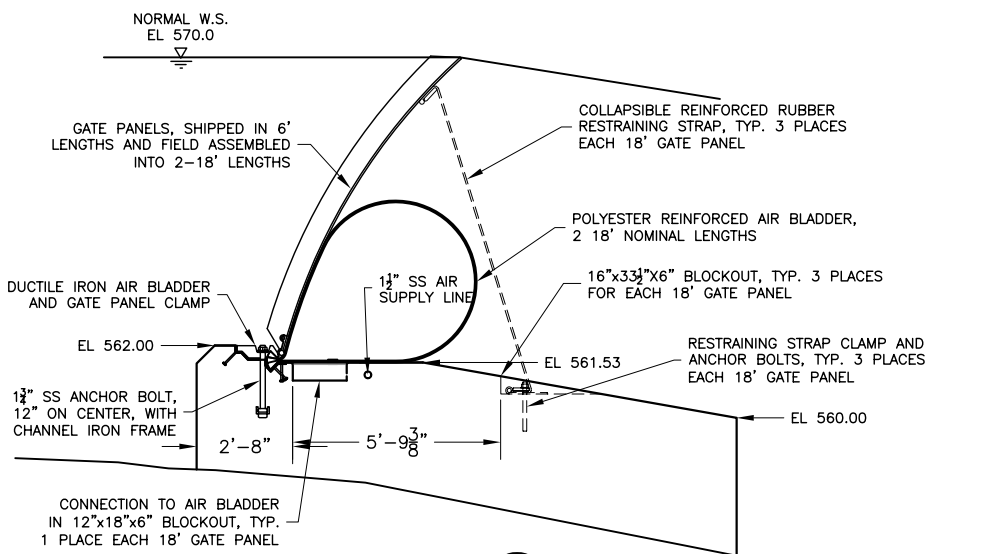

SECTION E 3/8"–1'–0" C–501

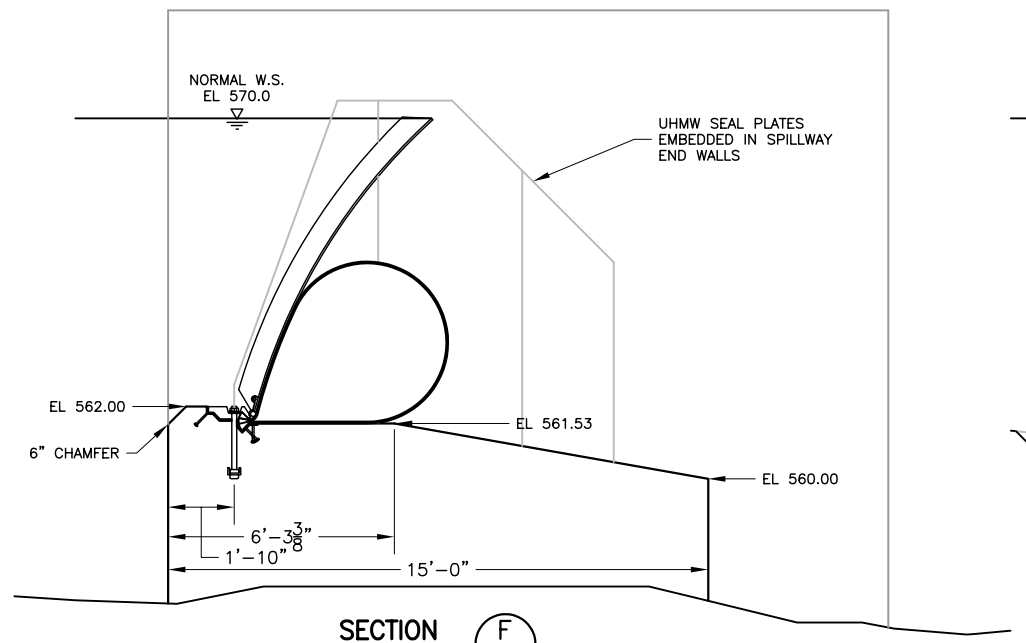

SECTION F 3/8"–1'–0" C–501

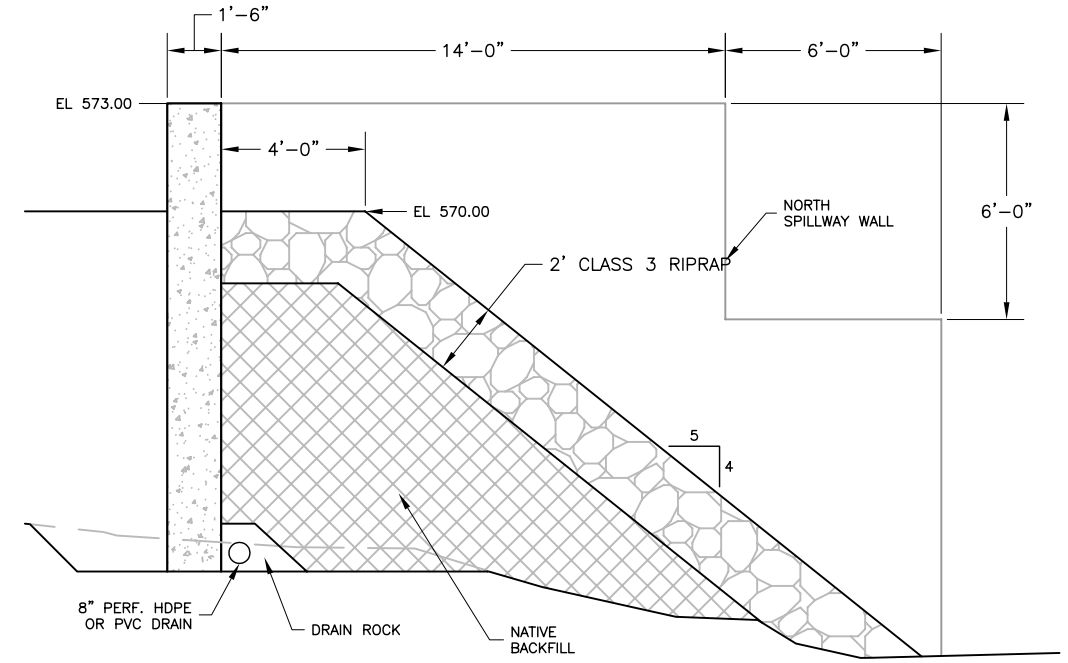

SECTION G 3/8"–1'–0" C–501

SEE C–514 FOR ALTERNATE WALL SECTION (TO BE USED IF ROCK ANCHORS ARE NOT FEASIBLE)

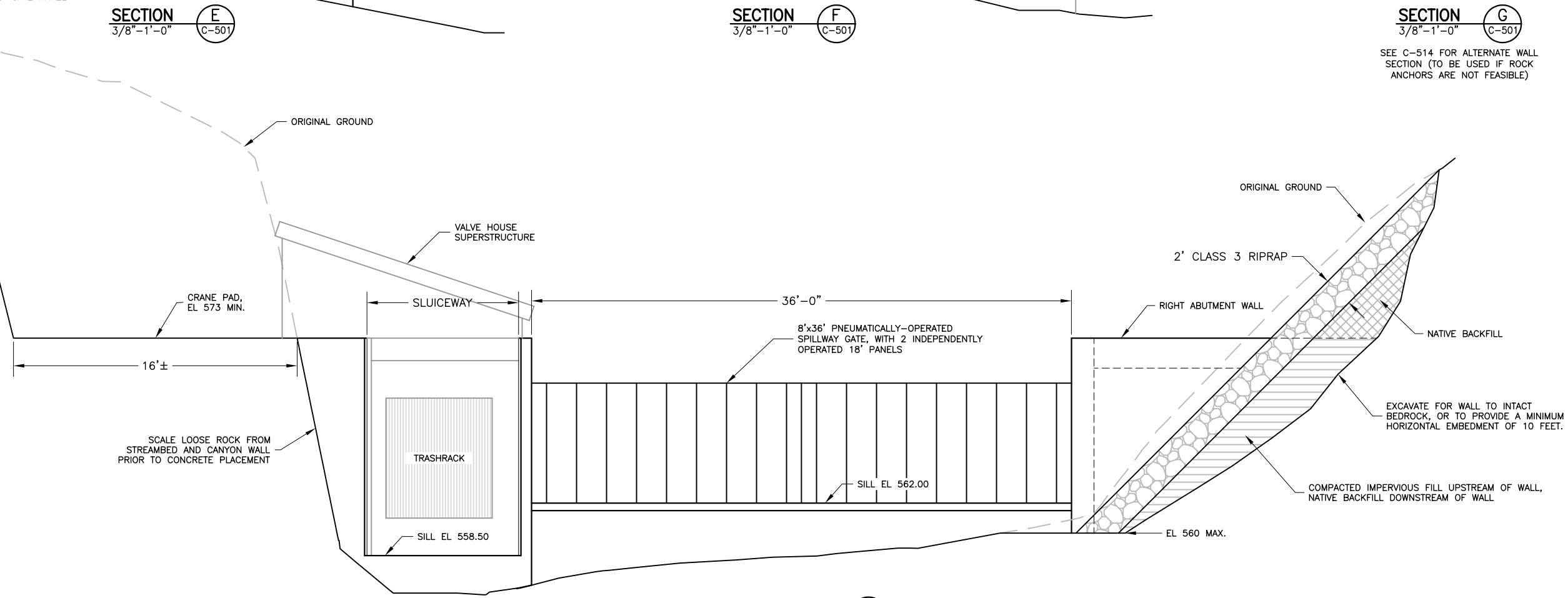

SECTION H 1/4"–1'–0" C–501

STATE OF ALASKA 49TH Larry D. Coupe No. CE 8200 REGISTERED PROFESSIONAL ENGINEER

ISSUE NO.	DATE	DESCRIPTION	BY	CHK	APPR
B	10/20/07	FOR AGENCY REVIEW	LDC		
A	10/20/07	FOR INTERNAL REVIEW	LDC		

SCALE: AS SHOWN
DESIGNED: L COUPE
DRAWN: L LEMKE
CHECKED:

AP&T
ALASKA POWER & TELEPHONE COMPANY

3 0 3 6 FT
3/8" = 1'–0"
4 0 4 8 FT
1/4" = 1'–0"

KASIDAYA CREEK
HYDROELECTRIC PROJECT
DIVERSION STRUCTURE GENERAL ARRANGEMENT SECTIONS, SHEET 2 OF 2

DATE: 10/20/2007
PROJECT NUMBER: 11588
SHEET NUMBER: C–507
ISSUE NO. B

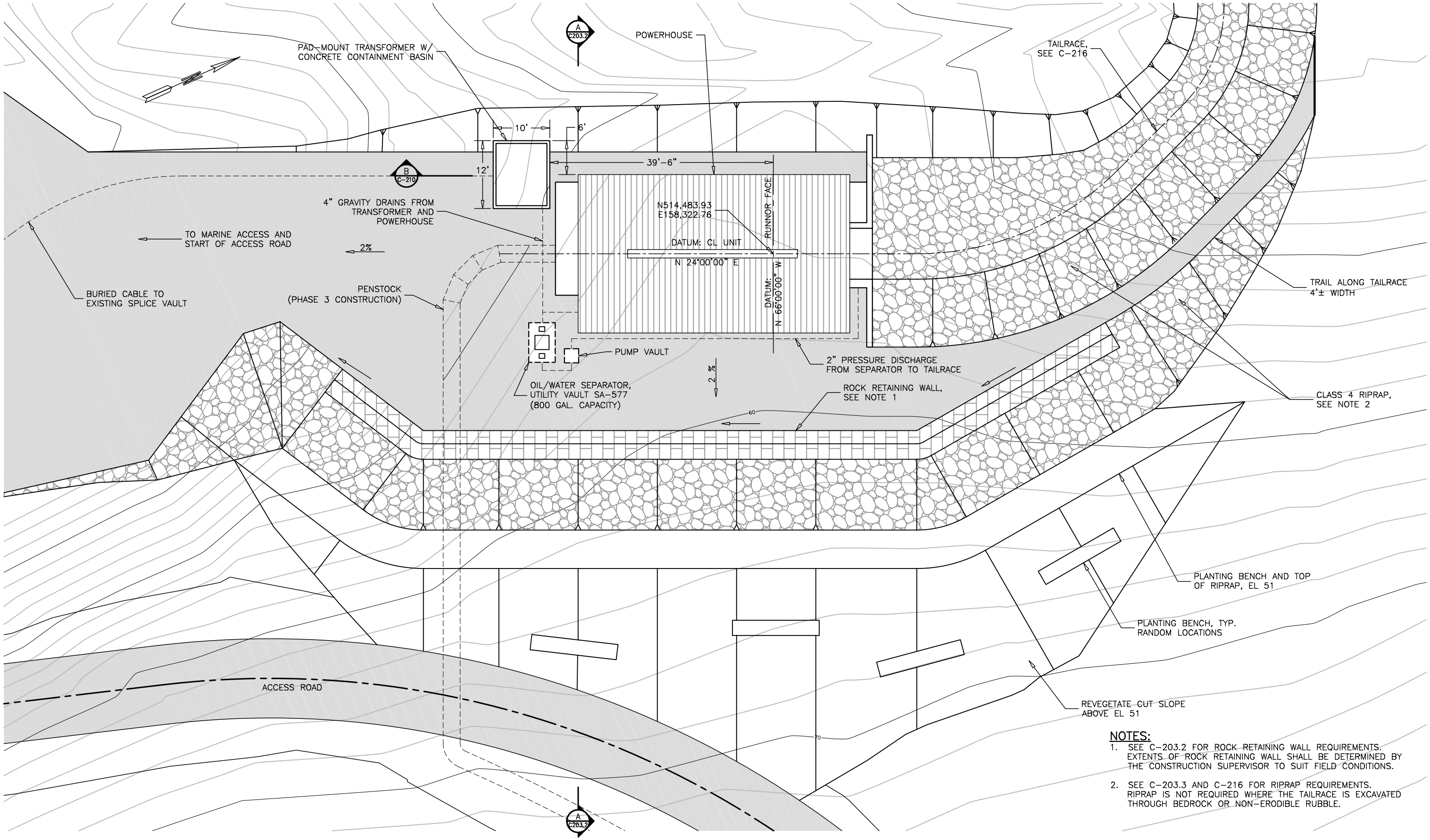

NOTES:

1. SEE C-203.2 FOR ROCK RETAINING WALL REQUIREMENTS. EXTENTS OF ROCK RETAINING WALL SHALL BE DETERMINED BY THE CONSTRUCTION SUPERVISOR TO SUIT FIELD CONDITIONS.
2. SEE C-203.3 AND C-216 FOR RIPRAP REQUIREMENTS. RIPRAP IS NOT REQUIRED WHERE THE TAILRACE IS EXCAVATED THROUGH BEDROCK OR NON-ERODIBLE RUBBLE.

ISSUE NO.	DATE	DESCRIPTION	BY	CHK	APPR
B2	5/23/08	FOR CONSTRUCTION, REVISED PUMP VAULT	LDC		
B	8/31/06	FOR AGENCY REVIEW	LDC		
A	6/26/06	FOR INTERNAL REVIEW	LDC		

SCALE: 1/8"=1'-0"
DESIGNED: L. COUPE
DRAWN: L. COUPE
CHECKED:

HALF-SIZE DRAWING

AP&T
ALASKA POWER & TELEPHONE COMPANY

8 0 8 16 FT
1/8" = 1'-0"

KASIDAYA CREEK HYDROELECTRIC PROJECT

POWERHOUSE SITE PLAN

DATE: 5/21/2007
PROJECT NUMBER:
SHEET NUMBER: C-201.1
ISSUE NO. C

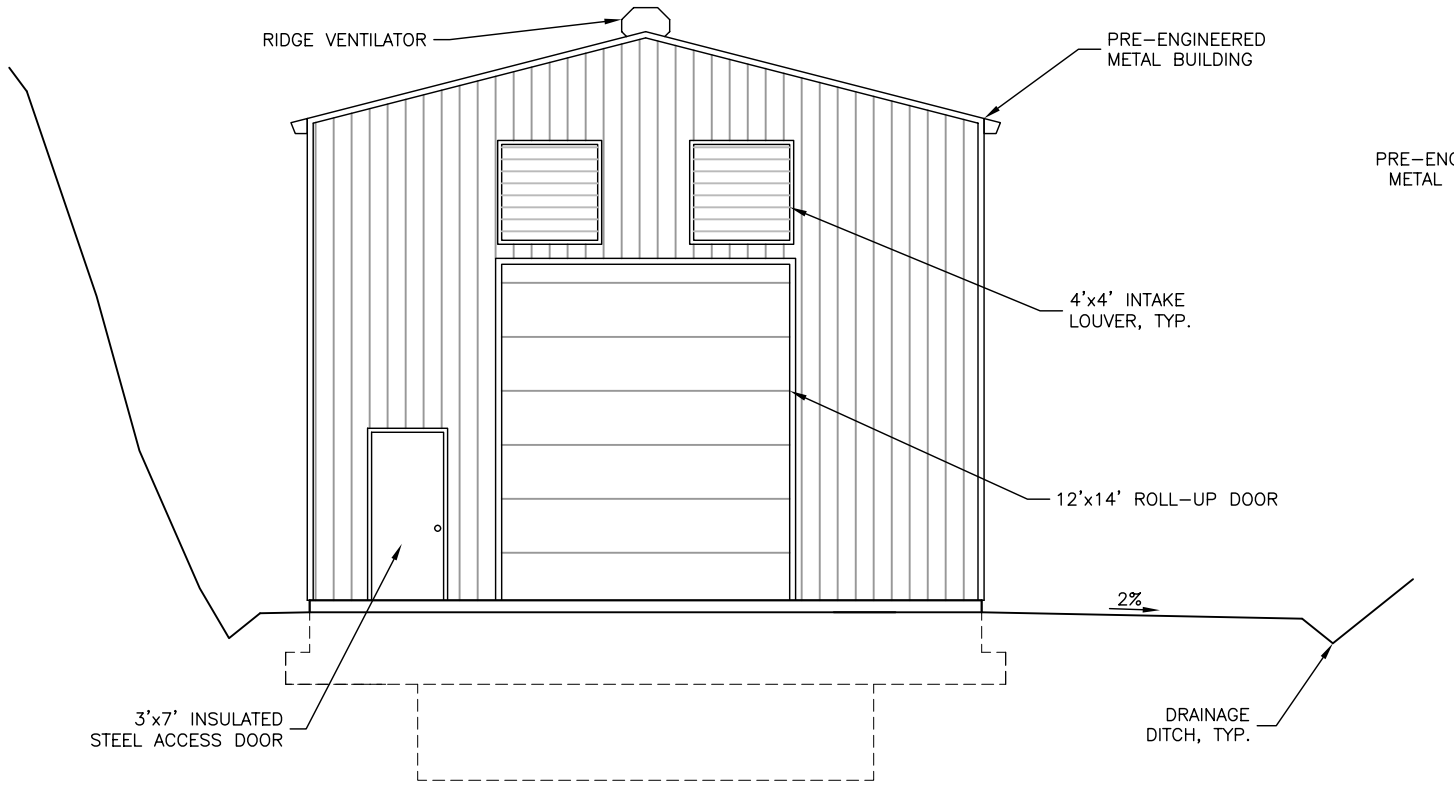

SOUTH ELEVATION

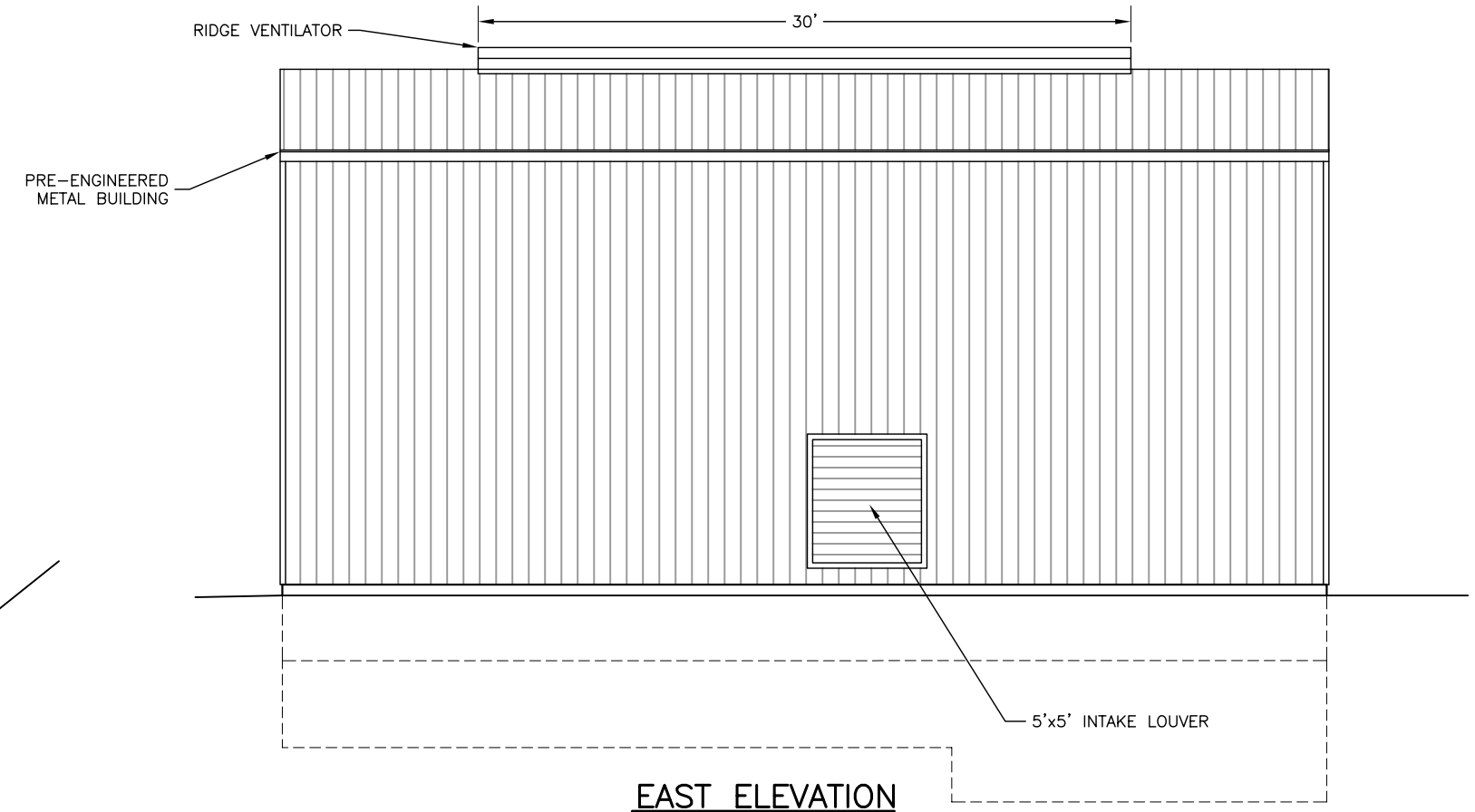

EAST ELEVATION

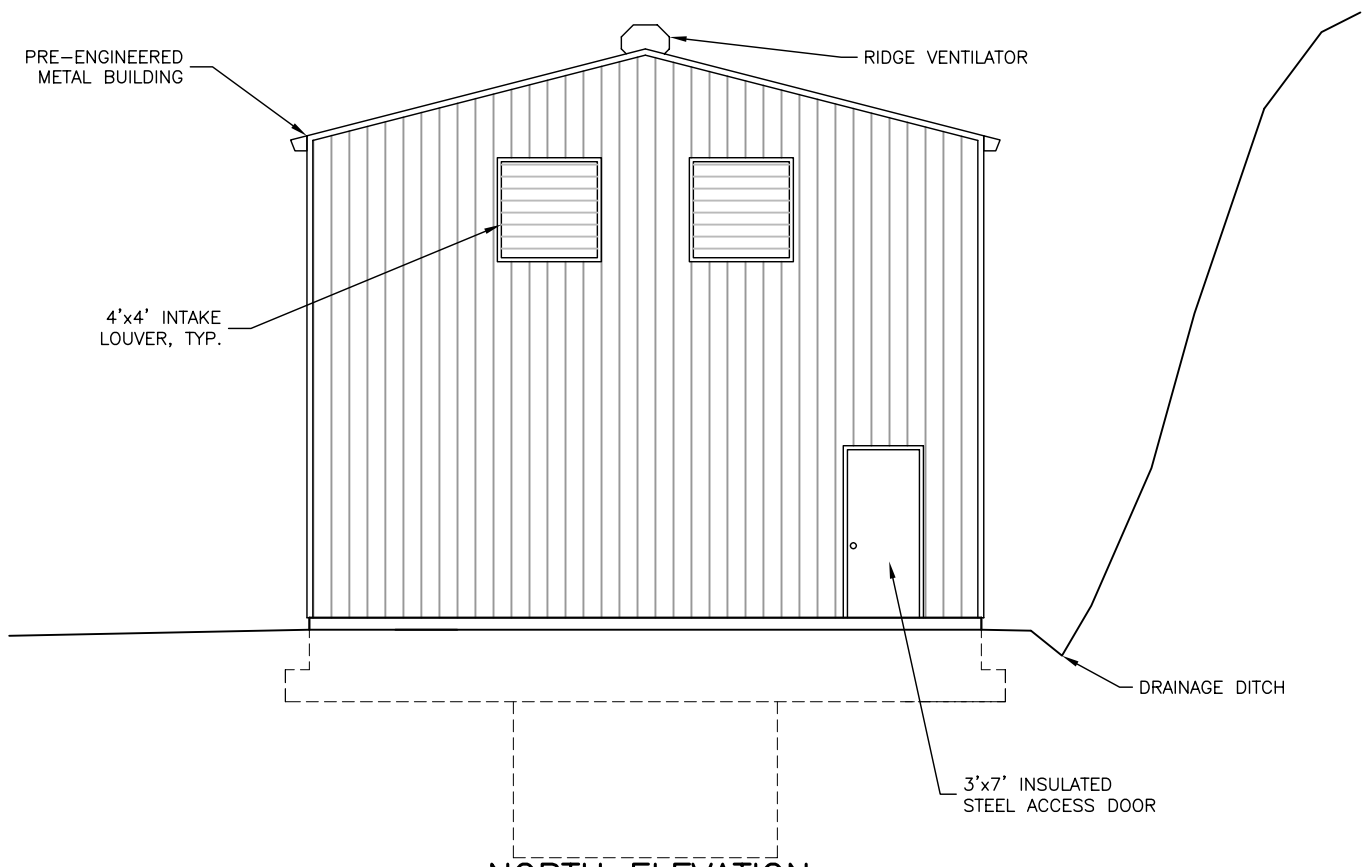

NORTH ELEVATION

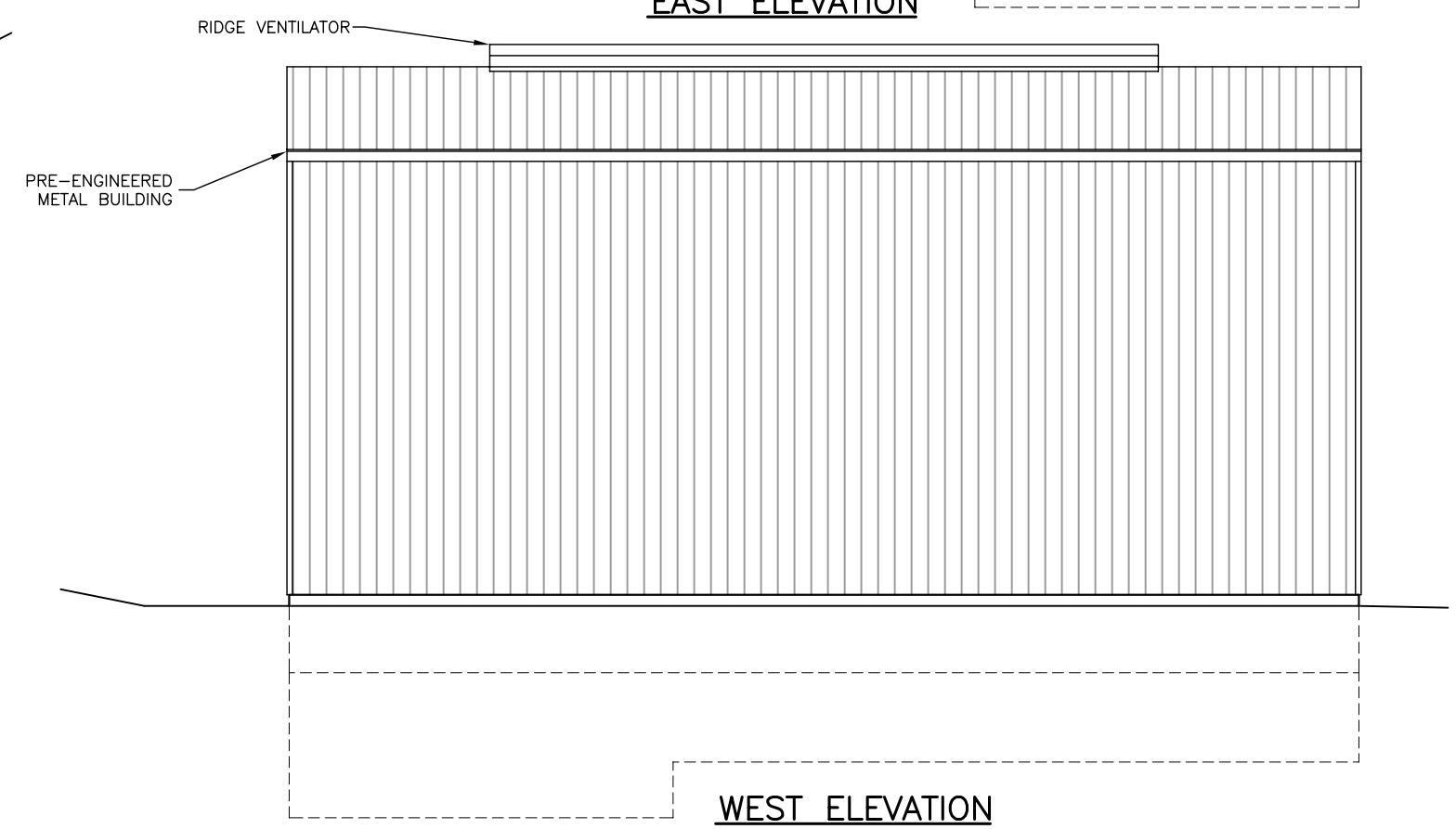

WEST ELEVATION

ISSUE NO.	DATE	DESCRIPTION	BY	CHK	APPR
B2	12/1/05	REVISED & REISSUED FOR AGENCY REVIEW	LDC		
B	5/16/05	FOR FERC REVIEW	LDC		

SCALE: 1/4"=1'-0"
DESIGNED: L. COUPE
DRAWN: L. COUPE
CHECKED:

HALF-SIZE DRAWING

AP&T
ALASKA POWER & TELEPHONE COMPANY

4 0 4 8 FT
1/4" = 1'-0"

KASIDAYA CREEK HYDROELECTRIC PROJECT

POWERHOUSE STRUCTURE EXTERIOR ELEVATIONS

DATE: 12/1/2005
PROJECT NUMBER:
SHEET NUMBER: C-202
ISSUE NO. B2

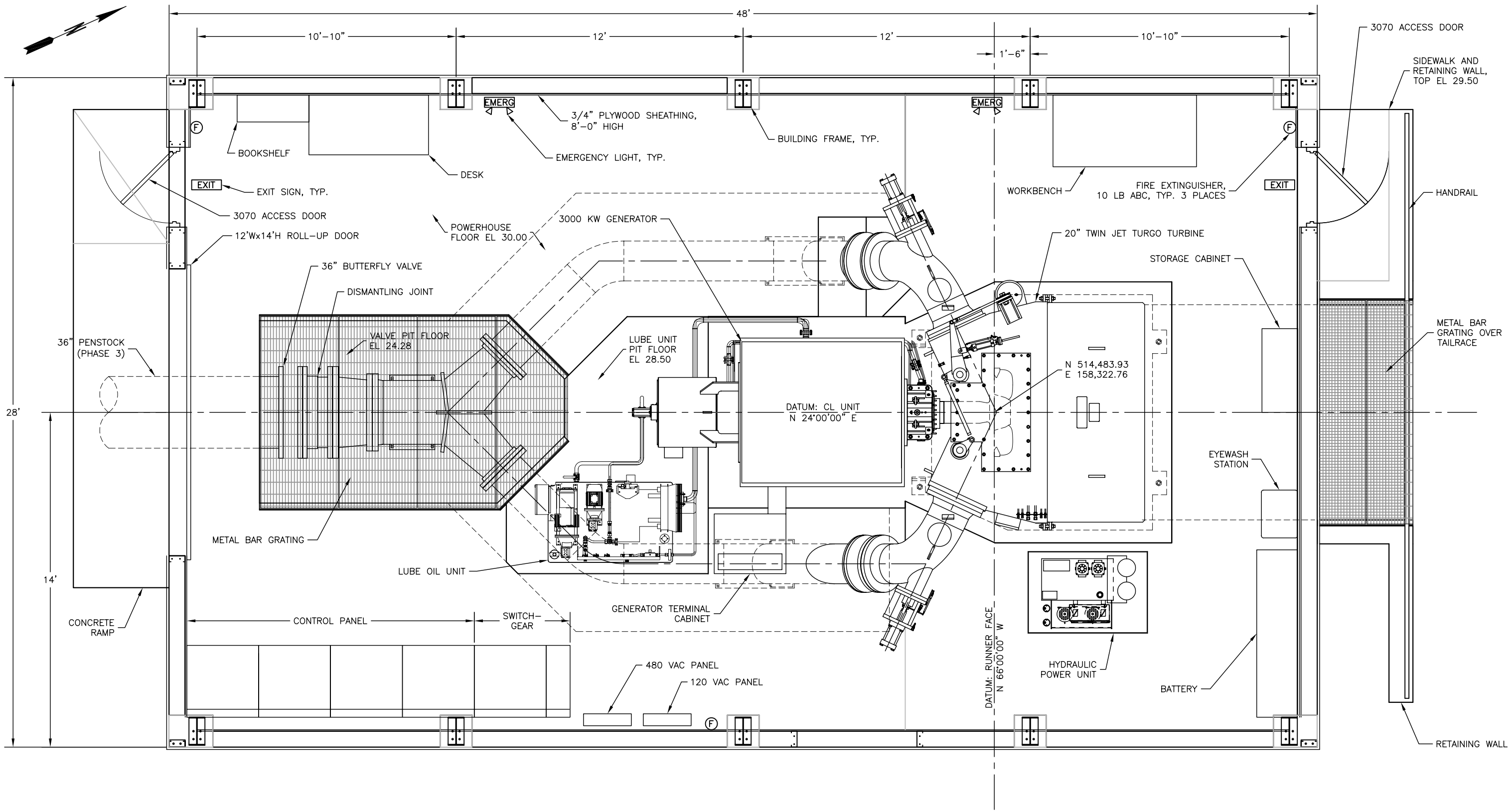

ISSUE NO.	DATE	DESCRIPTION	BY	CHK	APPR
B	8/31/06	FOR AGENCY REVIEW	LDC		
A	6/28/06	FOR INTERNAL REVIEW	LDC		

SCALE: 1/2"=1'-0"
DESIGNED: L. COUPE
DRAWN: L. COUPE
CHECKED:

HALF-SIZE DRAWING

AP&T
ALASKA POWER & TELEPHONE COMPANY

2 0 4 FT
1/2" = 1'-0"

KASIDAYA CREEK
HYDROELECTRIC PROJECT
POWERHOUSE
GENERAL PLAN AND SECTIONS
SHEET 1

DATE: 8/31/2006
PROJECT NUMBER:
SHEET NUMBER: C-203.1
ISSUE NO. B

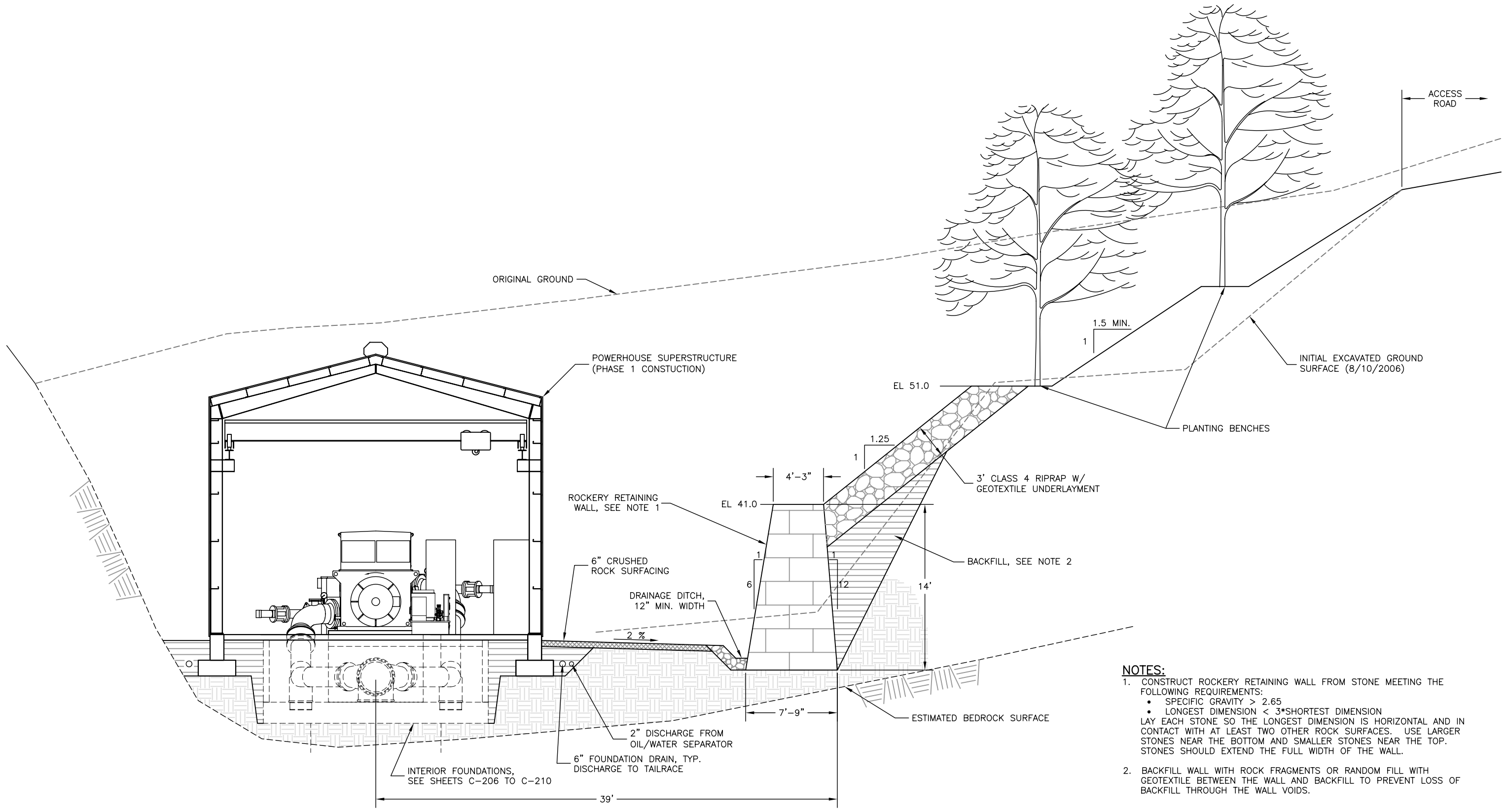

SECTION A (C201.1)
1/4"=1'-0"

NOTES:

1. CONSTRUCT ROCKERY RETAINING WALL FROM STONE MEETING THE FOLLOWING REQUIREMENTS:
   - SPECIFIC GRAVITY > 2.65
   - LONGEST DIMENSION < 3*SHORTEST DIMENSION

   LAY EACH STONE SO THE LONGEST DIMENSION IS HORIZONTAL AND IN CONTACT WITH AT LEAST TWO OTHER ROCK SURFACES. USE LARGER STONES NEAR THE BOTTOM AND SMALLER STONES NEAR THE TOP. STONES SHOULD EXTEND THE FULL WIDTH OF THE WALL.

2. BACKFILL WALL WITH ROCK FRAGMENTS OR RANDOM FILL WITH GEOTEXTILE BETWEEN THE WALL AND BACKFILL TO PREVENT LOSS OF BACKFILL THROUGH THE WALL VOIDS.

ISSUE NO.	DATE	DESCRIPTION	BY	CHK	APPR
B	8/31/06	FOR AGENCY REVIEW	LDC		
A	6/28/06	FOR INTERNAL REVIEW	LDC		

SCALE: 1/4"=1'-0"
DESIGNED: L. COUPE
DRAWN: L. COUPE
CHECKED:

HALF-SIZE DRAWING

AP&T
ALASKA POWER & TELEPHONE COMPANY

4 0 4 8 FT
1/4" = 1'-0"

KASIDAYA CREEK
HYDROELECTRIC PROJECT
POWERHOUSE
GENERAL PLAN AND SECTIONS
SHEET 2

DATE: 8/31/2006
PROJECT NUMBER:
SHEET NUMBER: C-203.2
ISSUE NO. B