Kathy Lochman

From: Saved by Windows Internet Explorer 8
Sent: Thursday, June 02, 2011 10:36 AM
Subject: 01052011_Unistrut_US
Attachments: ATT73204.jpg; ATT73209.css; ATT73211.dat; ATT73212.dat; ATT73213.dat; ATT73214.dat

TRUT®

re

APPROVED

By John Conway, CMG (Laptop) at 2:17 pm, Jun 06, 2011

Search [ ]

s

Back | Download PDF | Add To Cart | View Cart | Downlo

- Pipe and Conduit Clamps - P2600 - Unicushion 25' per Box

Additional Specifications

Pipe & Conduit Reference Data

- Pipe Spacing Table (3/4" to 2-1/2")
- Pipe Spacing Table (3" to 12")
- Channel Selection for Sch. 10 Trapeze
- Channel Selection for Sch. 40 Trapeze
- Pipe Reference Data (EMT, Copper Tube, IMC)
- Pipe Reference Data (Rigid Conduit, PVC)
- Schedule Steel Pipe Data

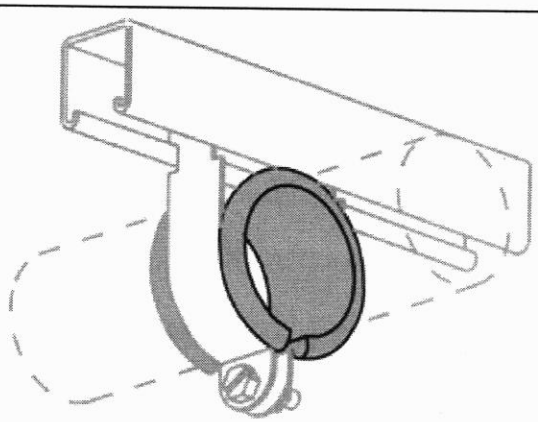

Graphic 2

Graphic 2:

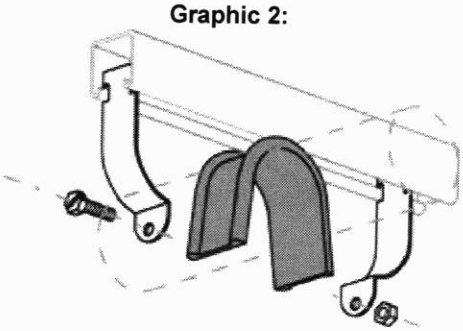

25 feet per carton.

Cut to length.

Clamps should be oversized by 1/8" in diameter.

Part No.	Finish	Weight	Box Qty.
P2600		250.00	1

©2004-2009 Atkore International, Inc. All Rights Reserved