CITY OF COFFMAN COVE

HARBOR EXPANSION
CONSTRUCTION DRAWINGS

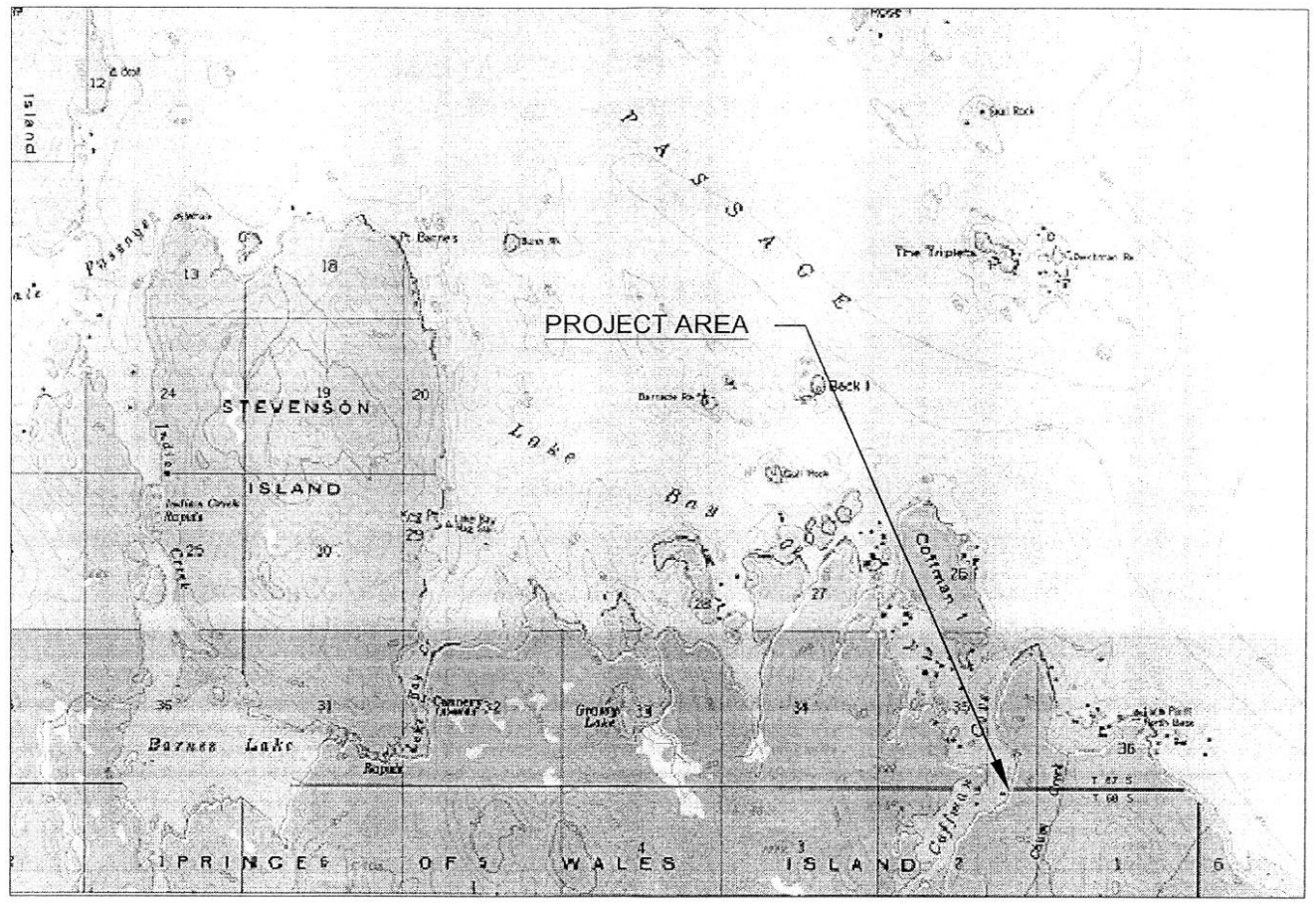

GRAPHIC SCALE: MILES

0 .5 1 1.5 2

MAYOR

GARY WILBURN

CITY COUNCIL

GARY WILBURN
CHUCK BATEMAN
LARRY WILLIAMS
RON RUSHER
RUSS HOLBROOK
CARLYN DUNCAN
BILL FITZPATRICK

INDEX OF SHEETS

No.	DESCRIPTION
T1	COVER SHEET
T2	GENERAL NOTES
C1	EXISTING CONDITIONS
C2	SITE PLAN
S1	DOCK PLAN
S2	PLAN – MAIN FLOAT WEST
S3	PLAN – MAIN FLOAT EAST
S4	TYPICAL 10' WIDE FLOAT
S5	FLOAT CONNECTION DETAILS
S6	FLOAT CONNECTION DETAILS
S7	PILE COLLAR DETAILS
S8	FINGER FLOAT DETAILS
S9	SKIFF FLOAT PLAN
S10	SKIFF FLOAT DETAILS
W1	WATER LINE SITE PLAN
W2	WATER LINE DOCK PLAN
W3	VALVE VAULT DETAILS
W4	WATER SYSTEM DETAILS
E1	SITE PLAN – POWER
E2	ELECTRICAL PANEL SCHEDULES
E3	POWER CENTER DETAILS
E4	POWER PEDESTAL DETAILS
E5	POWER CENTER DETAILS
E6	SITE PLAN – LIGHTING

Date	No.	Description	By
		DOCK DESIGN	

Designed: TSS | Approved: SAM
Drawn: TSS | Scale: AS NOTED | Date: 1/27/03
Checked: SAM | Project No. 012360

R&M ENGINEERING-KETCHIKAN, INC.
355 CARLANNA LAKE ROAD
KETCHIKAN, ALASKA 99901

Client: CITY OF COFFMAN COVE
P.O. BOX 18135
COFFMAN COVE, ALASKA 99918

Project: COFFMAN COVE HARBOR EXPANSION

Sheet Description: COVER

Sheet No. T1

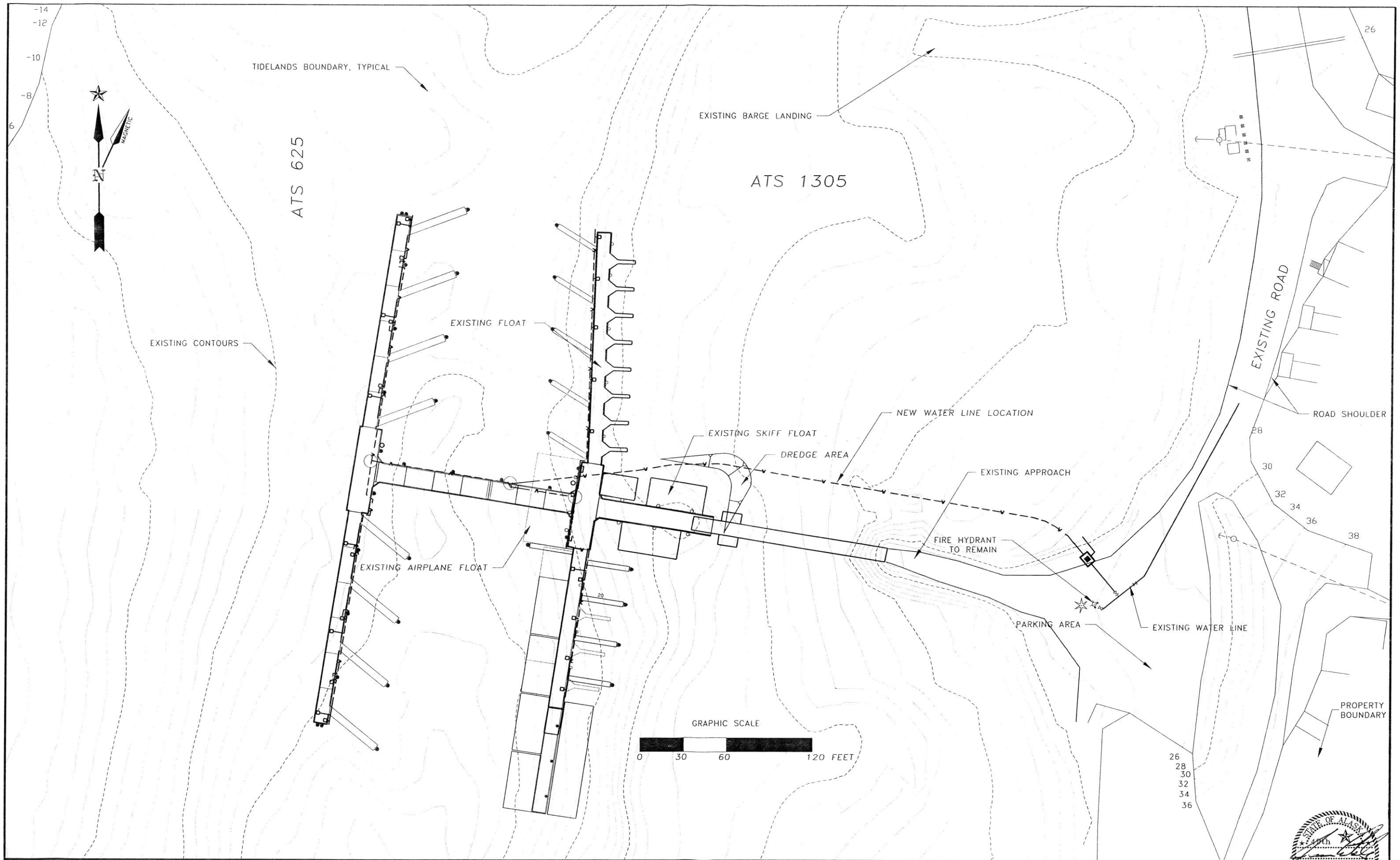

Date	No.	Description	By
10/1/02		95% REVIEW	
1/06/03		ISSUED FOR CONSTRUCTION	
		DOCK DESIGN	

Designed: TSS
Drawn: TSS
Checked: SAM
Approved: SAM
Scale: AS NOTED
Date: 1/27/03
Project No. 012360

R&M ENGINEERING-KETCHIKAN, INC.
355 CARLANNA LAKE ROAD
KETCHIKAN, ALASKA 99901

Client: CITY OF COFFMAN COVE
P.O. BOX 18135
COFFMAN COVE, ALASKA 99918

Project: COFFMAN COVE HARBOR EXPANSION

Sheet Description: EXISTING CONDITIONS

Sheet No. C1

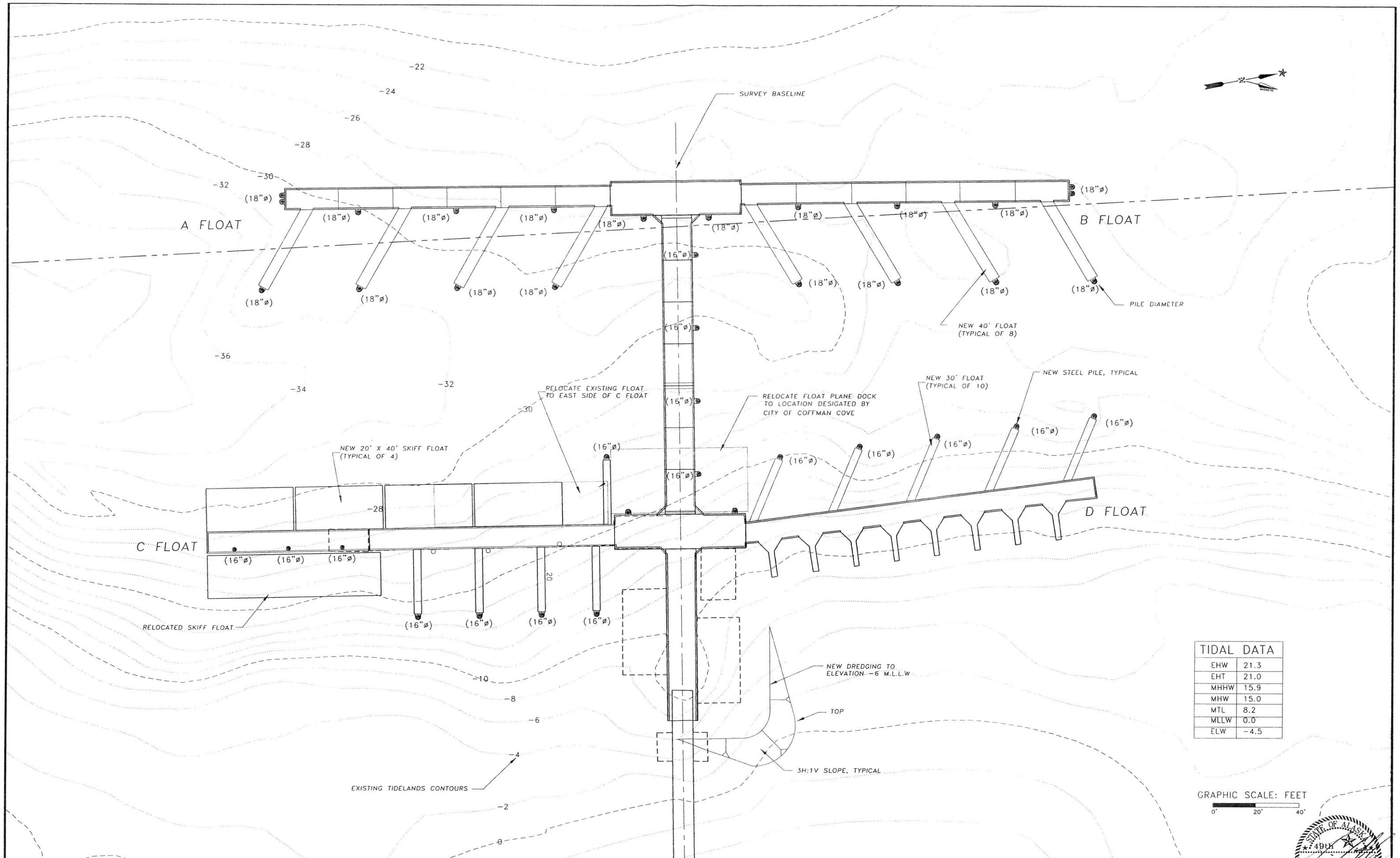

TIDAL DATA	
EHW	21.3
EHT	21.0
MHHW	15.9
MHW	15.0
MTL	8.2
MLLW	0.0
ELW	-4.5

Date	No.	Description	By
		DOCK DESIGN	

Designed: TSS | Approved: SAM
Drawn: TSS | Scale: AS NOTED | Date: 1/27/03
Checked: SAM | Project No. 012360

R&M ENGINEERING-KETCHIKAN, INC.
355 CARLANNA LAKE ROAD
KETCHIKAN, ALASKA 99901

Client: CITY OF COFFMAN COVE
P.O. BOX 18135
COFFMAN COVE, ALASKA 99918

Project: COFFMAN COVE HARBOR EXPANSION

Sheet Description: SITE PLAN

Sheet No. C2

STATE OF ALASKA
49th
JIM COSTALES
CE 10359
REGISTERED PROFESSIONAL ENGINEER

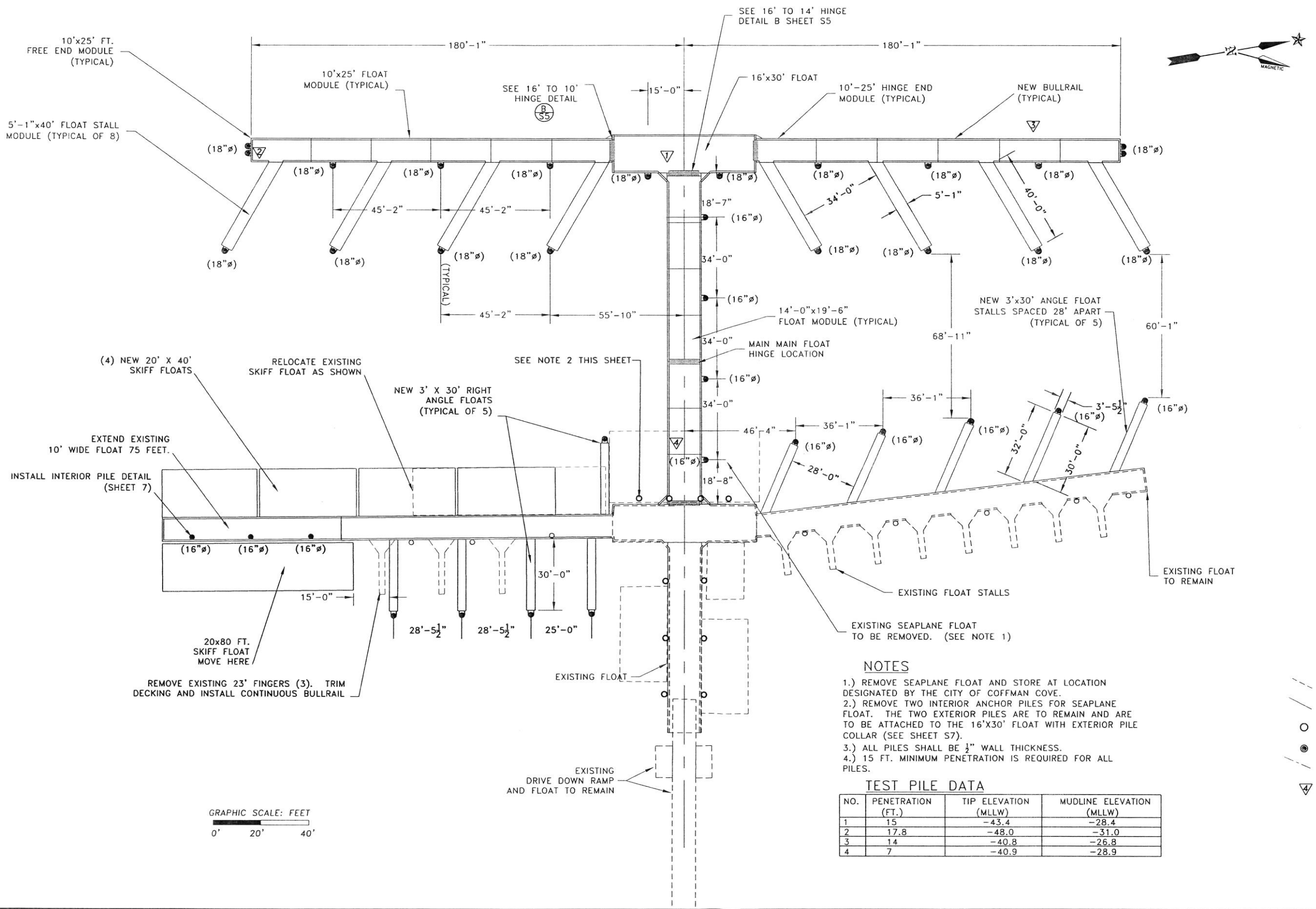

NOTES

1.) REMOVE SEAPLANE FLOAT AND STORE AT LOCATION DESIGNATED BY THE CITY OF COFFMAN COVE.
2.) REMOVE TWO INTERIOR ANCHOR PILES FOR SEAPLANE FLOAT. THE TWO EXTERIOR PILES ARE TO REMAIN AND ARE TO BE ATTACHED TO THE 16'X30' FLOAT WITH EXTERIOR PILE COLLAR (SEE SHEET S7).
3.) ALL PILES SHALL BE ½" WALL THICKNESS.
4.) 15 FT. MINIMUM PENETRATION IS REQUIRED FOR ALL PILES.

TEST PILE DATA

NO.	PENETRATION (FT.)	TIP ELEVATION (MLLW)	MUDLINE ELEVATION (MLLW)
1	15	-43.4	-28.4
2	17.8	-48.0	-31.0
3	14	-40.8	-26.8
4	7	-40.9	-28.9

LEGEND

- EXISTING STRUCTURES
- NEW STRUCTURES
- EXISTING PILES
- NEW PILES
- CENTERLINE
- TEST PILE LOCATION

STATE OF ALASKA 49TH JIM COSTALES CE 10359 REGISTERED PROFESSIONAL ENGINEER

Date	No.	Description	By
		DOCK DESIGN	

Designed: JLC | Approved: SAM
Drawn: VHM | Scale: AS NOTED | Date: 1/27/03
Checked: JLC | Project No. 012360

R&M ENGINEERING-KETCHIKAN, INC.
355 CARLANNA LAKE ROAD
KETCHIKAN, ALASKA 99901

Client: CITY OF COFFMAN COVE
P.O. BOX 18135
COFFMAN COVE, ALASKA 99918

Project: COFFMAN COVE HARBOR EXPANSION

Sheet Description: DOCK PLAN

Sheet No. S1

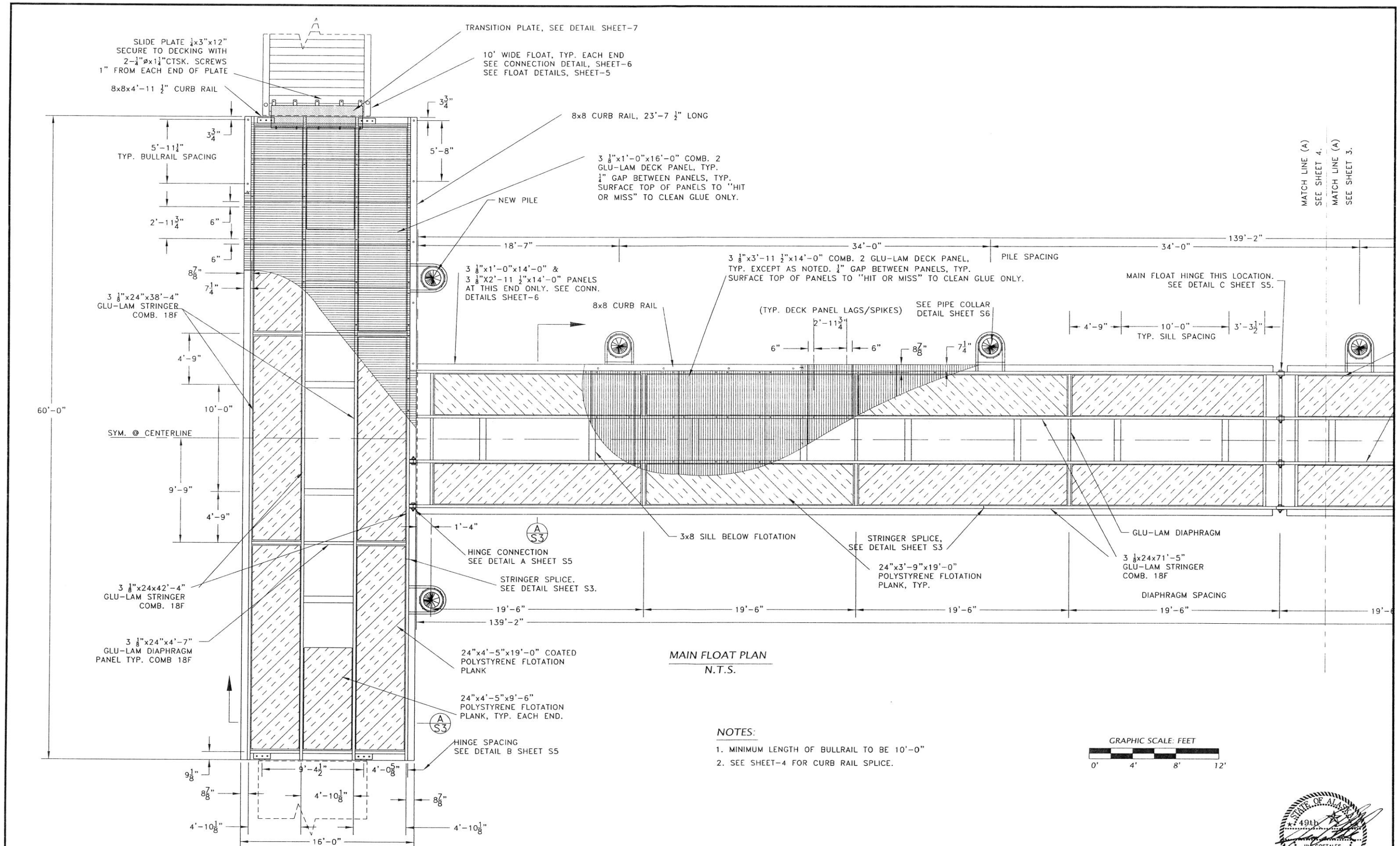

MAIN FLOAT PLAN

N.T.S.

NOTES:

1. MINIMUM LENGTH OF BULLRAIL TO BE 10'-0"
2. SEE SHEET-4 FOR CURB RAIL SPLICE.

GRAPHIC SCALE: FEET

0' 4' 8' 12'

STATE OF ALASKA 49th JIM COSTALES CE 10359 REGISTERED PROFESSIONAL ENGINEER

Date	No.	Description	By
		DOCK DESIGN	

Designed: JLC | Approved: SAM
Drawn: VHM | Scale: AS NOTED | Date: 1/27/03
Checked: JLC | Project No. 012360

R&M ENGINEERING-KETCHIKAN, INC.
355 CARLANNA LAKE ROAD
KETCHIKAN, ALASKA 99901

Client: CITY OF COFFMAN COVE
P.O. BOX 18135
COFFMAN COVE, ALASKA 99918

Project: COFFMAN COVE HARBOR EXPANSION

Sheet Description: PLAN - MAIN FLOAT WEST

Sheet No. S2

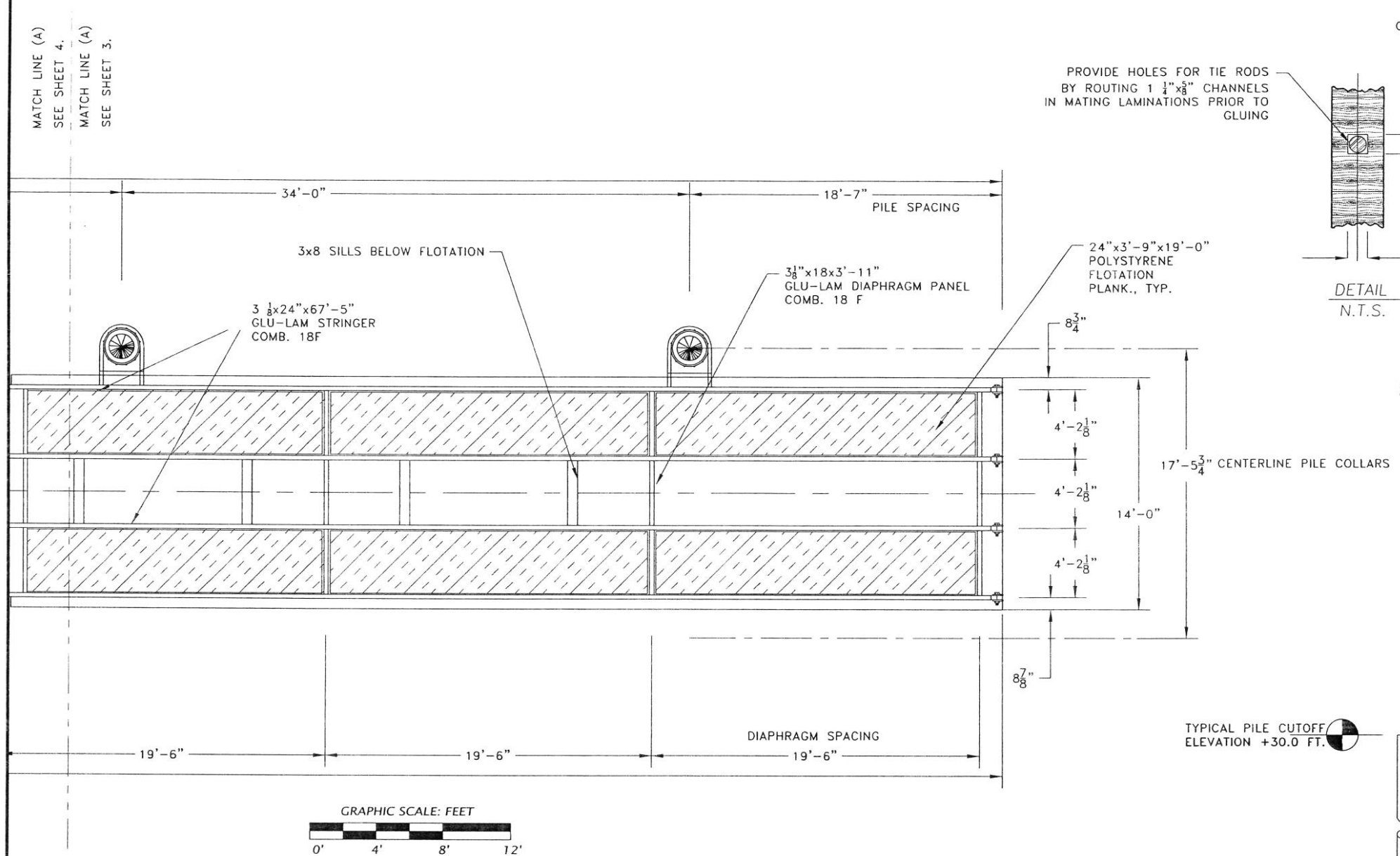

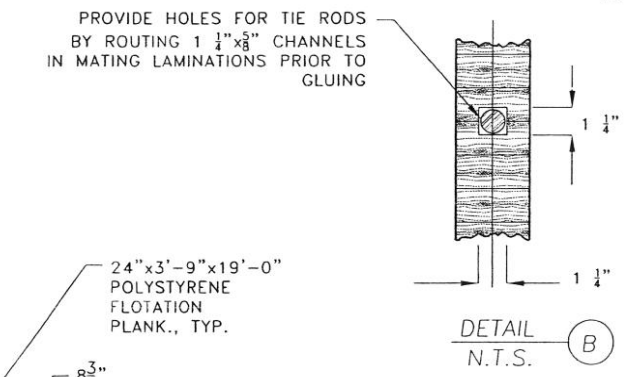

DETAIL (B)
N.T.S.

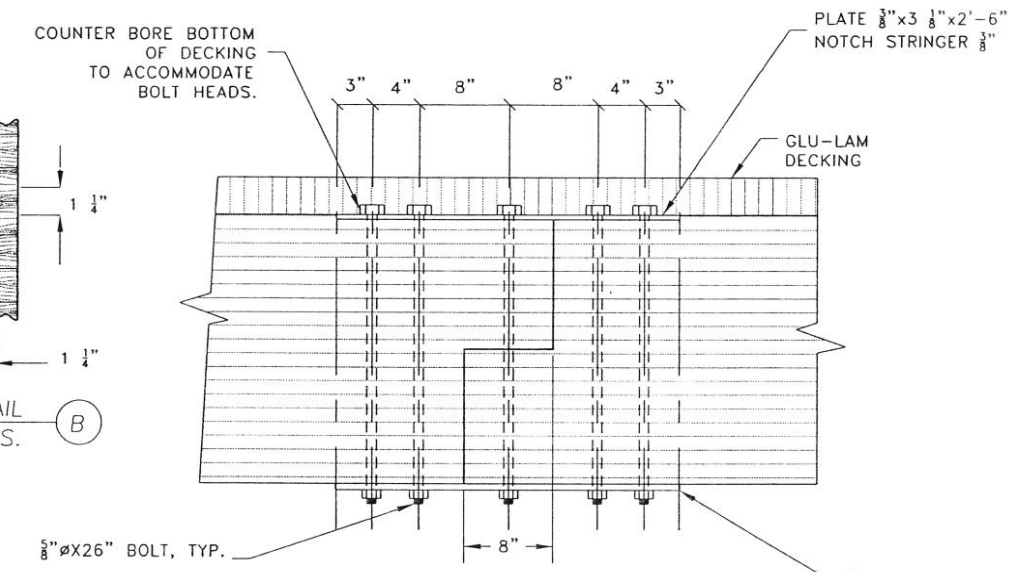

TYPICAL STRINGER SPLICE
N.T.S.

NOTES:

60' STRINGERS
3 1/8"x24"x18'-4" + 3 1/8"x24"x42'-4"
3 1/8"x24"x22'-4" + 3 1/8"x24"x38'-4"
139'-2' STRINGERS
3 1/8"x24"x68'-5" + 3 1/8"x24"x71'-5"

SECURE DECK PANELS TO EXTERIOR STRINGERS W/ 1/2"øx6" LAG BOLTS.
SECURE DECK PANELS TO INTERIOR STRINGERS W/ 1/2"øx6" SPIKES.
FIELD BORE 3/8"ø PILOT HOLES IN PANELS AND STRINGERS AND TREAT PER SPECIFICATIONS. FOUR BOLTS AND FOUR SPIKES PER PANEL.

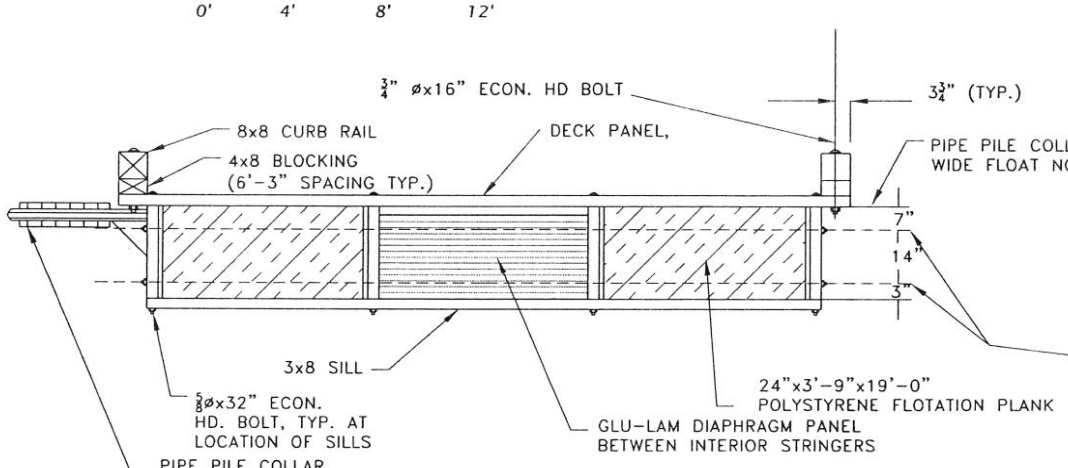

SECTION (A)
N.T.S.

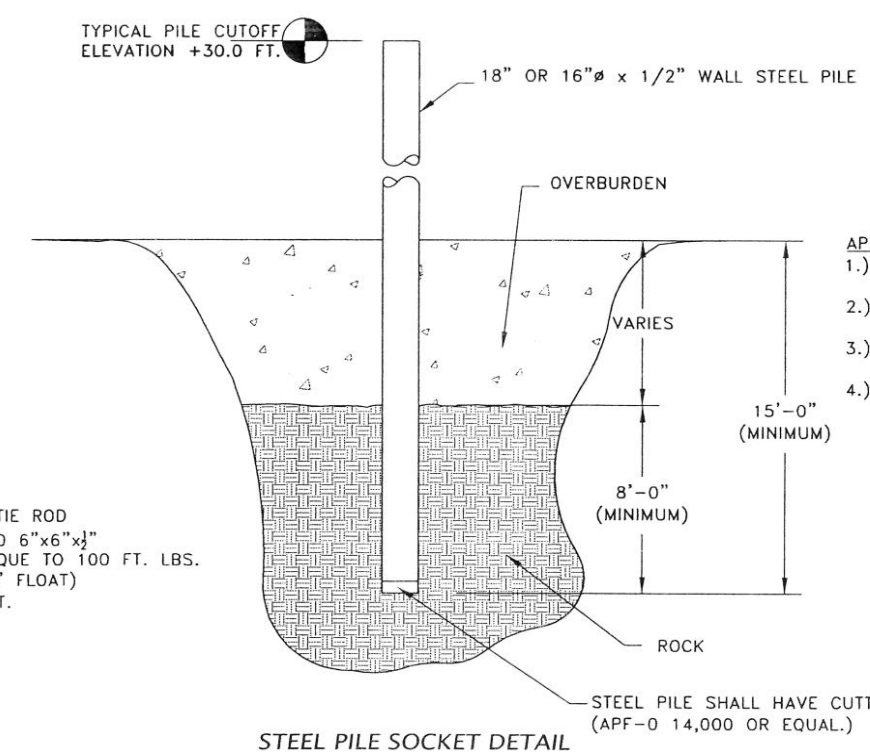

STEEL PILE SOCKET DETAIL
N.T.S.

APPROVED PLACEMENT

1.) DRILL SOCKET 19" ø, CLEAN OUT HOLE, DRIVE PILE TO BOTTOM OF SOCKET, OR
2.) DRILL SOCKET THROUGH PILE, USING PILE AS CASING, OR
3.) IF CUTTING SHOE WILL OBTAIN PENETRATION, IT MAY BE USED WITHOUT SOCKETING.
4.) PENETRATION MAY BE OBTAINED BY DRILLING AND SHOOTING TO TOE OF PILE AS LONG AS PILE ALIGNMENT IS NOT COMPROMISED.

STATE OF ALASKA
49th
JIM COSTALES
CE 10359
REGISTERED PROFESSIONAL ENGINEER

Date	No.	Description	By
		DOCK DESIGN	

Designed: JLC | Approved: SAM
Drawn: VHM | Scale: AS NOTED | Date: 1/27/03
Checked: JLC | Project No. 012360

R&M ENGINEERING-KETCHIKAN, INC.
355 CARLANNA LAKE ROAD
KETCHIKAN, ALASKA 99901

Client: CITY OF COFFMAN COVE
P.O. BOX 18135
COFFMAN COVE, ALASKA 99918

Project: COFFMAN COVE HARBOR EXPANSION

Sheet Description: PLAN - MAIN FLOAT EAST

Sheet No. S3

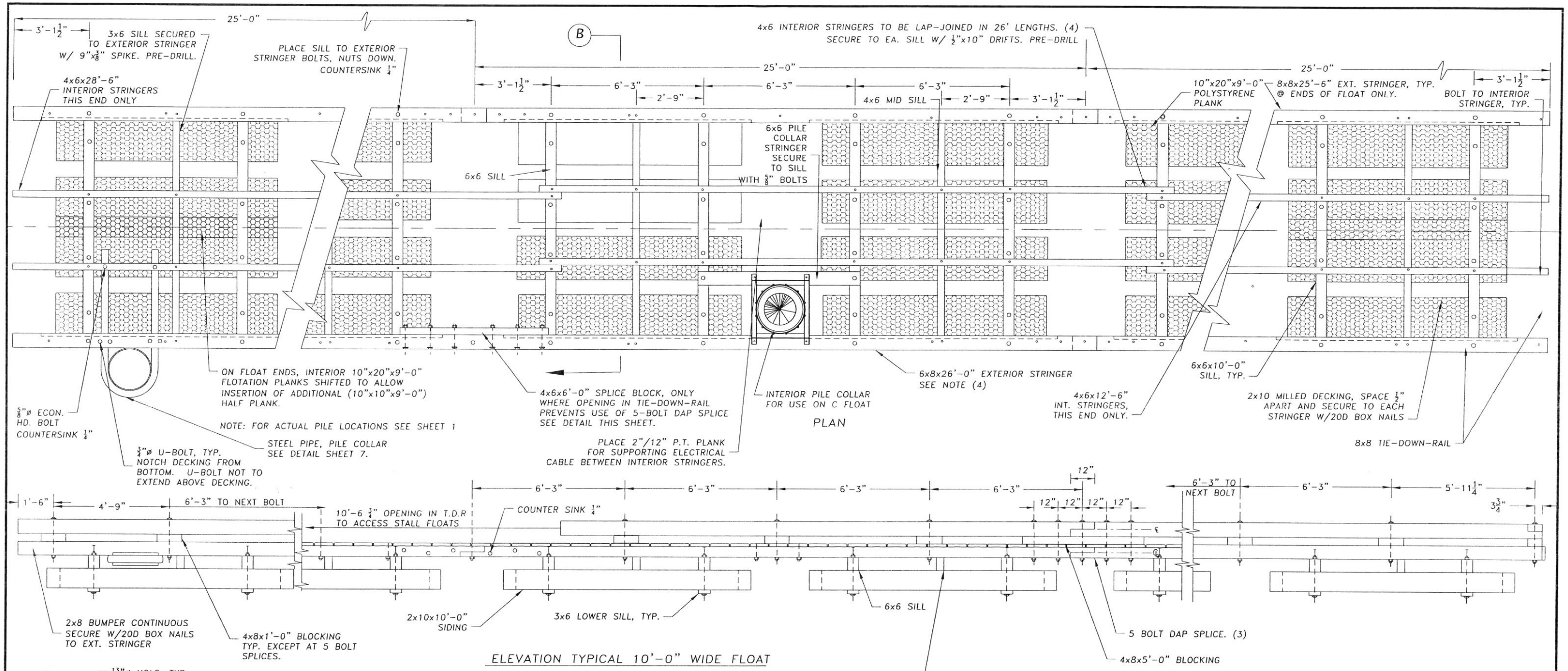

PLAN

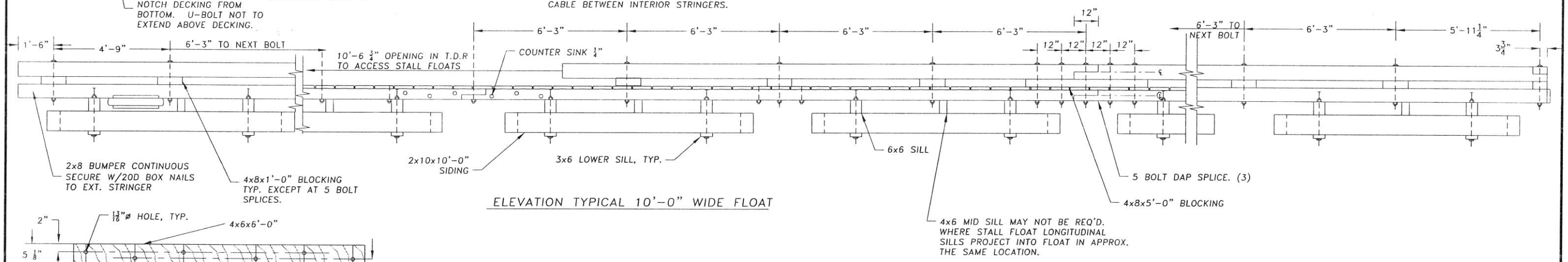

ELEVATION TYPICAL 10'-0" WIDE FLOAT

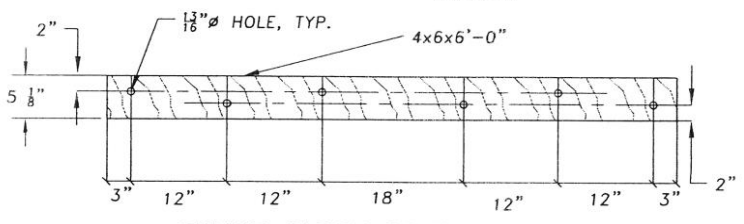

SPLICE BLOCK BOLT PATTERN
N.T.S

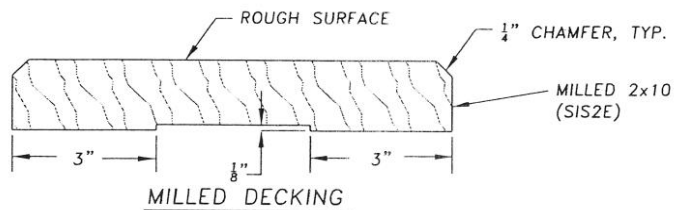

MILLED DECKING
N.T.S

NOTES:
(1) OPENING IN TIE-DOWN-RAIL FOR ACCESS TO STALL FLOAT. SEE LAYOUT FOR LOCATIONS
(2) 2x10 SIDING IS A 2x12{S4S} CUT TO 1 ½"x10 ¼".
(3) THE STANDARD METHOD FOR JOINING FLOAT MODULES IS TO DAP JOIN THE TIE-DOWN-RAILS AND EXTERIOR STRINGERS AND SPLICE THEM TOGETHER UTILIZING A 5-BOLT SPLICE. AT SOME LOCATIONS, WHERE AN OPENING IN THE TIE-DOWN-RAIL PREVENTS THE USE OF THE STANDARD SPLICE, AN ALTERNATE 7-BOLT STRINGER SPLICE WITH SPLICE BLOCK IS REQ'D. THE STANDARD SPACING FOR SPLICES IS 25'-0" CEN. TO CEN., EXCEPT WHERE NONSTANDARD 12'-6" HALF MODULES OCCUR. SEE STRINGER LAYOUT.
(4) LENGTH VARIES ON NONSTANDARD END MODULES AND HALF MODULES.
(5) ALL MATERIALS TO BE S-4-S EXCEPT DECKING {MILLED S1S2E} AND 2x10 SIDING.

GRAPHIC SCALE: FEET
0' 4' 8' 12'

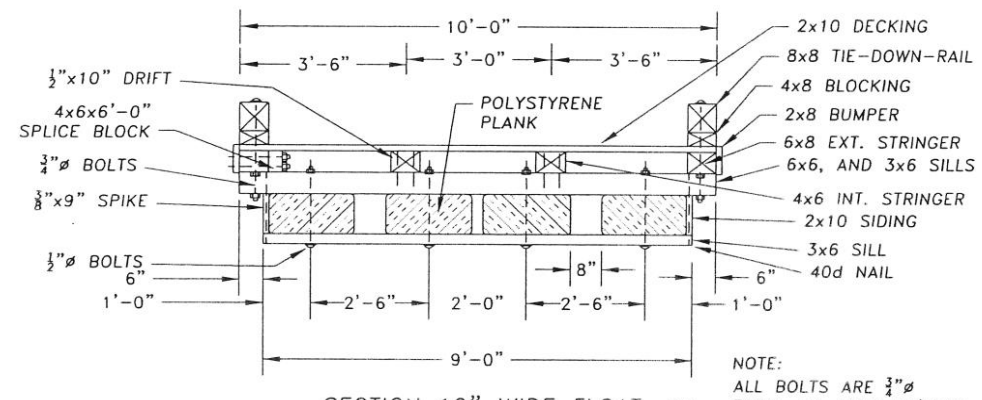

SECTION 10" WIDE FLOAT (B)
N.T.S.

NOTE:
ALL BOLTS ARE ¾"ø ECON. HD. TYPE W/LUGS, UNLESS OTHERWISE NOTED.

STATE OF ALASKA — JIM COSTALES CE 10359 — REGISTERED PROFESSIONAL ENGINEER

Date	No.	Description	By
		DOCK DESIGN	

Designed: JLC | Approved: SAM
Drawn: VHM | Scale: AS NOTED | Date: 1/27/03
Checked: JLC | Project No. 012360

R&M ENGINEERING-KETCHIKAN, INC.
355 CARLANNA LAKE ROAD
KETCHIKAN, ALASKA 99901

Client: CITY OF COFFMAN COVE
P.O. BOX 18135
COFFMAN COVE, ALASKA 99918

Project: COFFMAN COVE HARBOR EXPANSION

Sheet Description: TYPICAL 10' WIDE FLOAT

Sheet No. S4

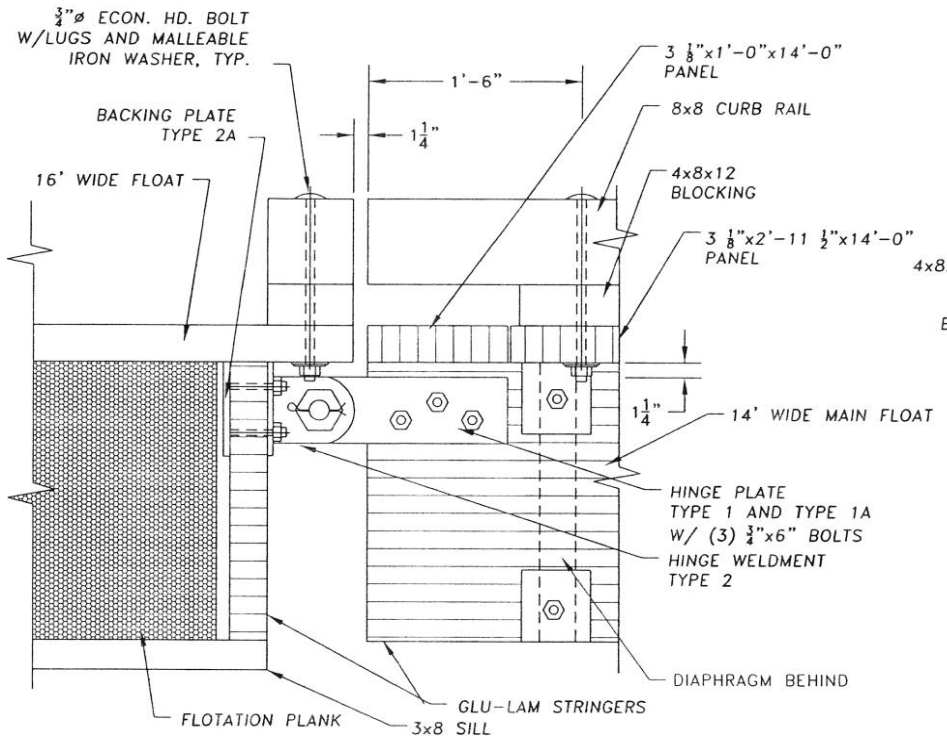

ELEVATION – HINGE 16' TO 14' WIDE FLOAT (A)

N.T.S

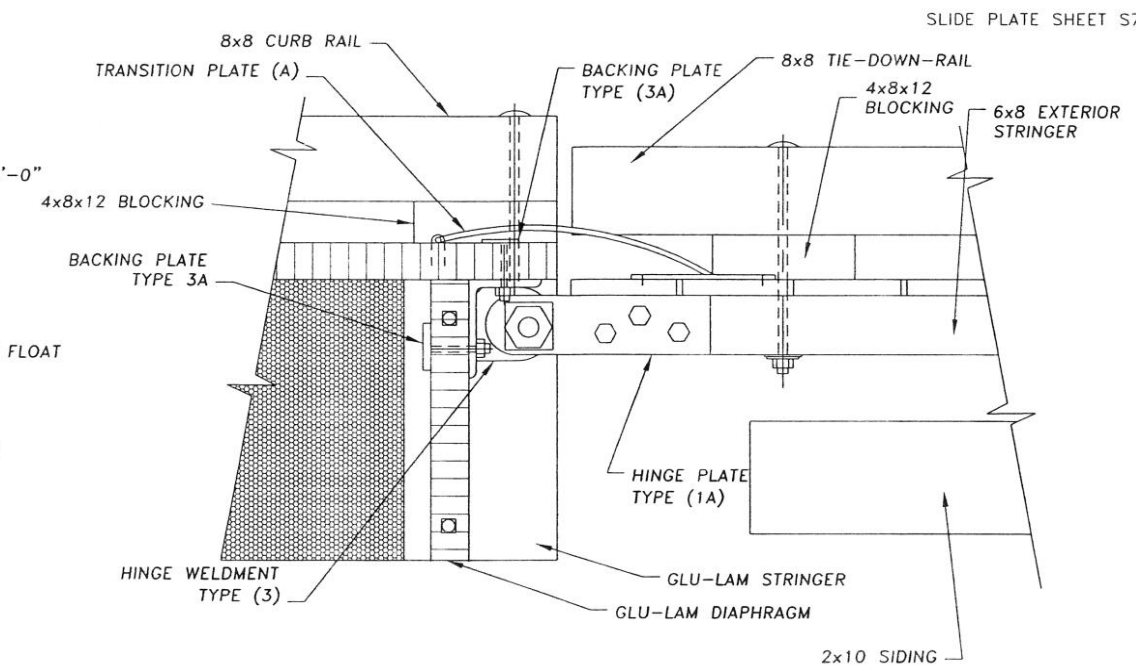

ELEVATION – HINGE 16' TO 10' WIDE FLOATS (B)

N.T.S

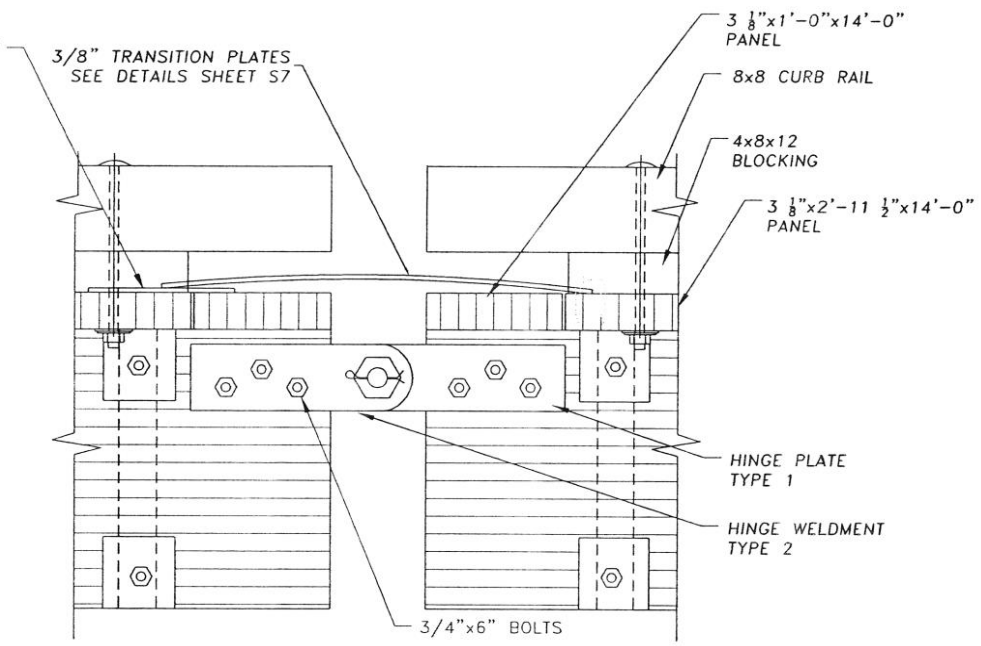

ELEVATION – HINGE 14' WIDE MAIN FLOAT (C)

N.T.S

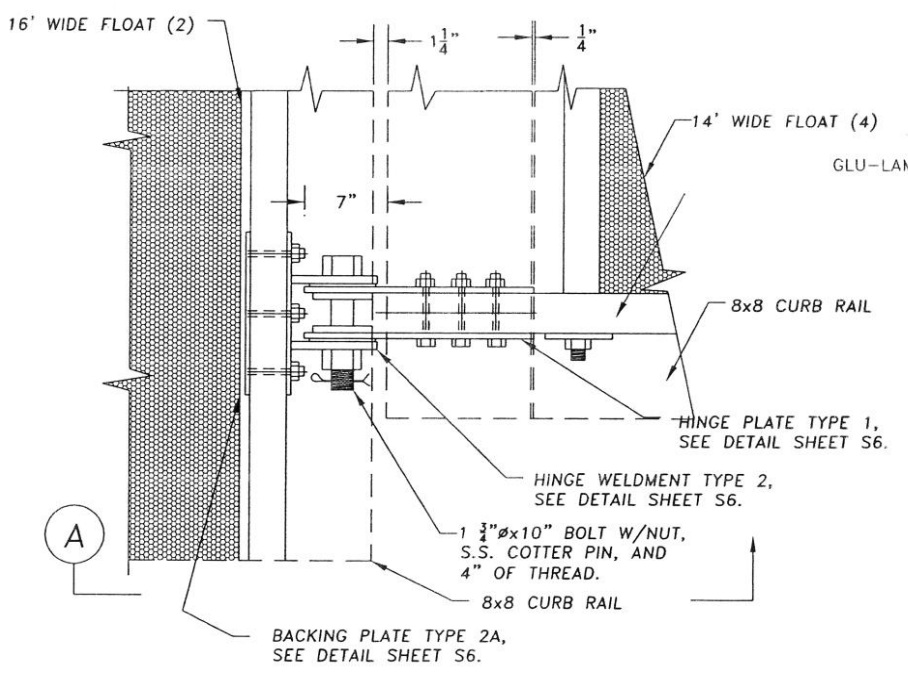

PLAN – HINGE 16' TO 14' WIDE FLOATS

N.T.S

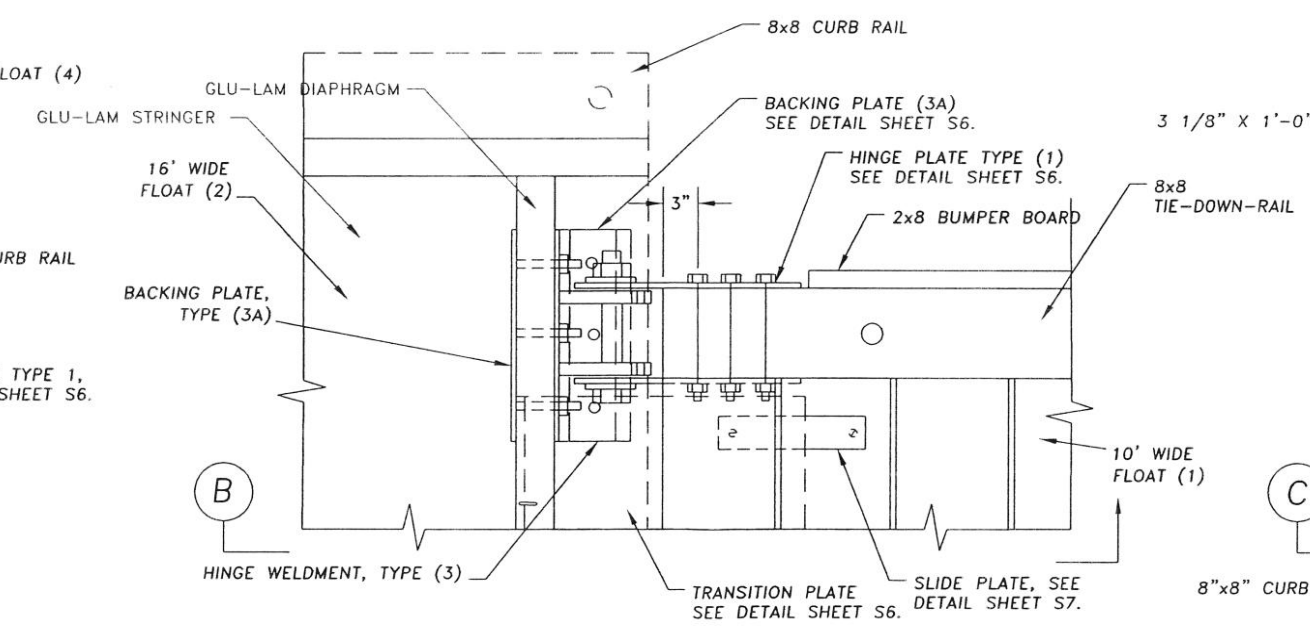

PLAN – HINGE 16' TO 10' WIDE FLOATS

N.T.S

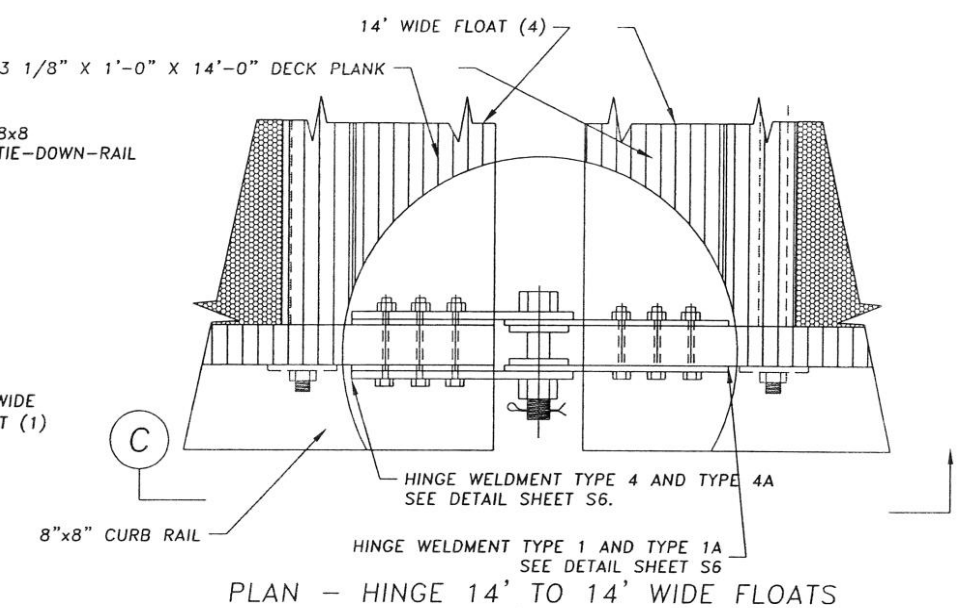

PLAN – HINGE 14' TO 14' WIDE FLOATS

N.T.S

Date	No.	Description	By
		DOCK DESIGN	

Designed: JLC | Approved: SAM
Drawn: VHM | Scale: AS NOTED | Date: 1/27/03
Checked: JLC | Project No. 012360

R&M ENGINEERING-KETCHIKAN, INC.
355 CARLANNA LAKE ROAD
KETCHIKAN, ALASKA 99901

Client: CITY OF COFFMAN COVE
P.O. BOX 18135
COFFMAN COVE, ALASKA 99918

Project: COFFMAN COVE HARBOR EXPANSION

Sheet Description: FLOAT CONNECTION DETAILS

Sheet No. S5

STATE OF ALASKA
49th
JIM COSTALES
CE 10359
REGISTERED PROFESSIONAL ENGINEER

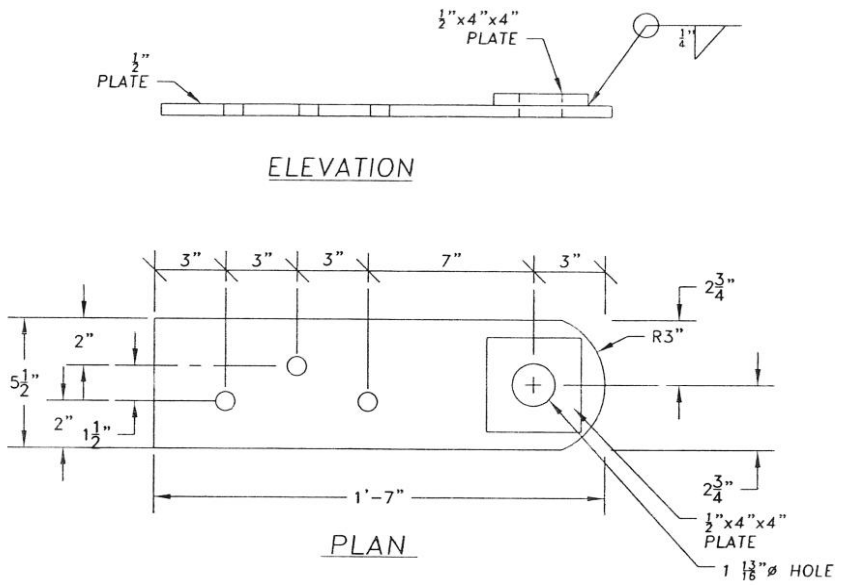

HINGE PLATE TYPE 1 – AS SHOWN, 16 REQ'D.
HINGE PLATE TYPE 1A–OPP. HAND., 16 REQ'D.

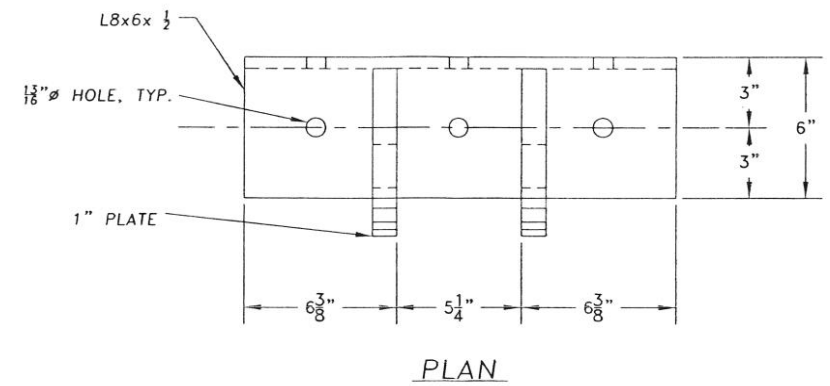

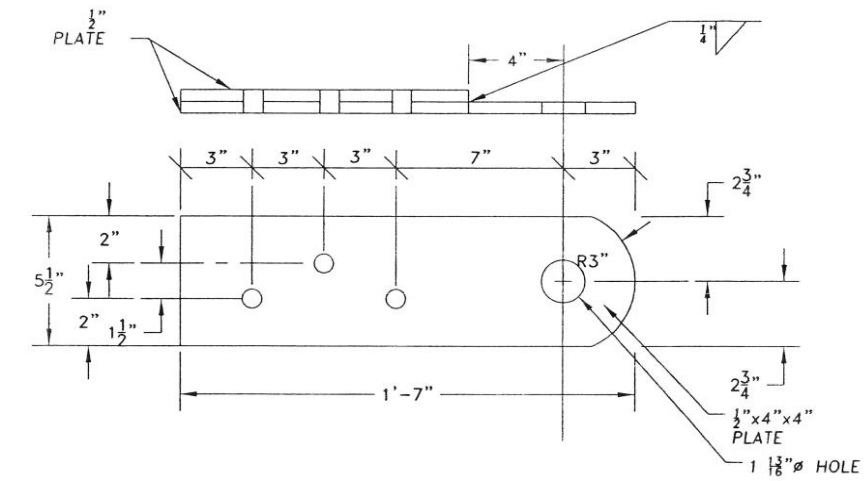

HINGE PLATE TYPE 4 AS SHOWN, 4 REQ'D.
HINGE PLATE TYPE 4A–OPP. HAND., 4 REQ'D.

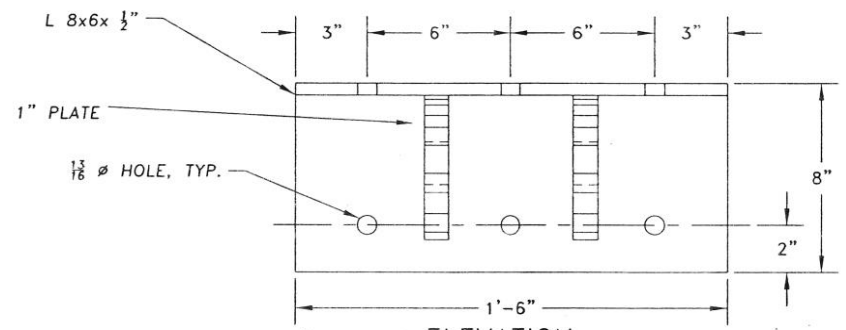

ELEVATION
HINGE WELDMENT TYPE 3–4 REQ'D.
N.T.S

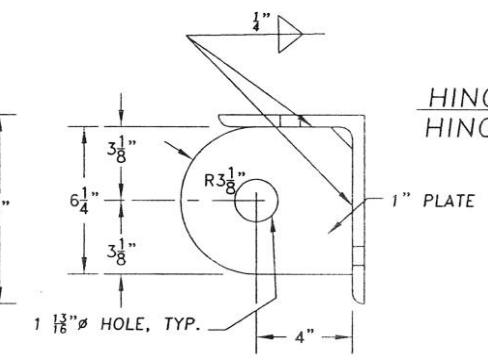

PROFILE

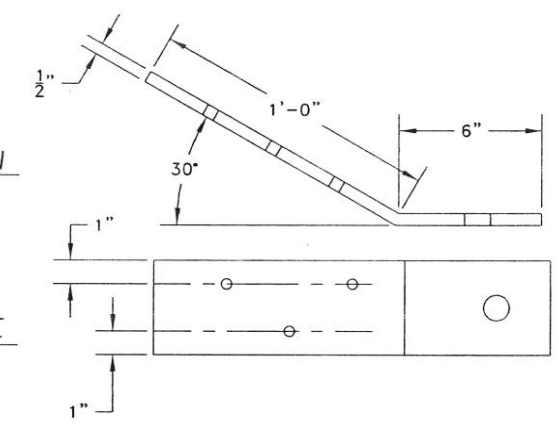

FLOAT STALL CONNECTION WELDMENT
4–REQUIRED PER NEW FLOAT STALL

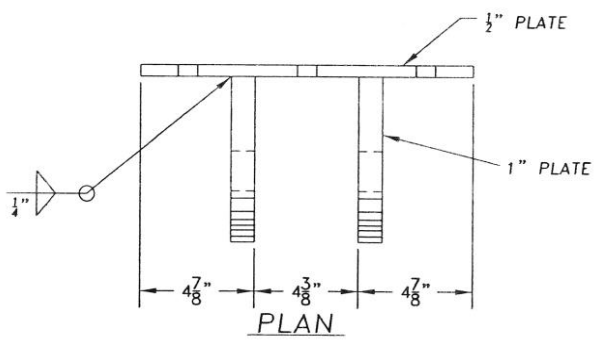

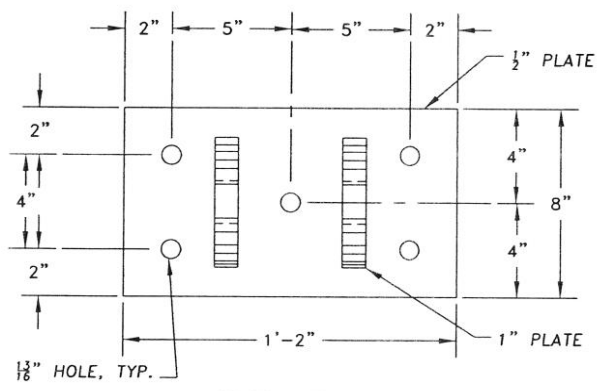

ELEVATION

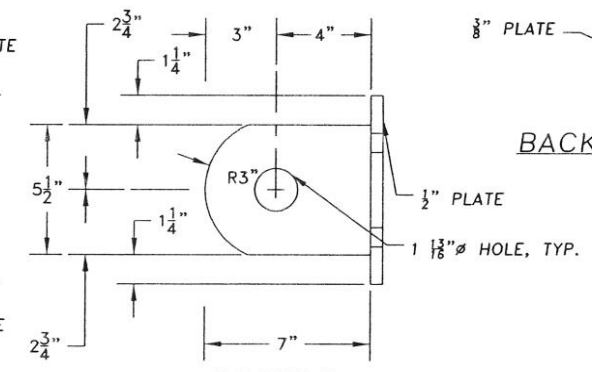

PROFILE

HINGE WELDMENT TYPE 2–8 REQ'D.
BACK–UP PLATE TYPE 2A–8 REQ'D.

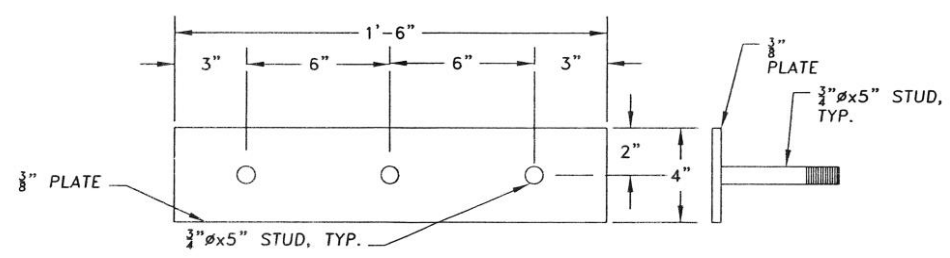

BACK–UP PLATE TYPE 3A – 4 REQ'D
N.T.S.

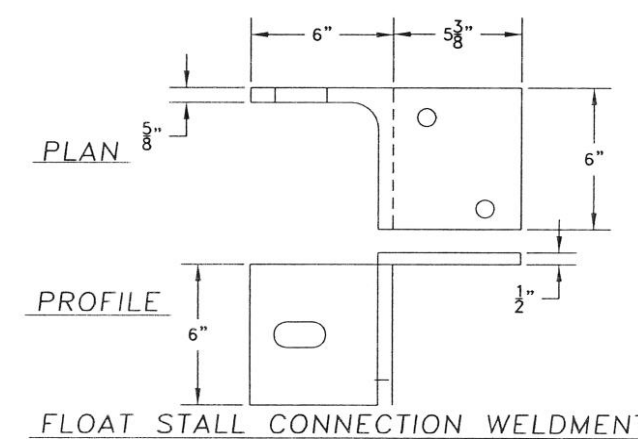

FLOAT STALL CONNECTION WELDMENT
4–REQUIRED PER FLOAT STALL

NOTES:

1. BACK–UP PLATE TYPE 2A IS SIMILAR TO HINGEWELDMENT TYPE 2 EXCEPT THAT THERE ARE ¾"øx5" STUDS IN PLACE OF THE 13/16"ø HOLES AND THEY HAVE NO 1" PLATES.
4. USE E70 ELECTRODES.
2. ALL WELDS ¼" FILLET UNLESS NOTED OTHERWISE.
3. ALL HARDWARE SHALL BE HOT DIPPED GALVANIZED.

STATE OF ALASKA
49th
JIM COSTALES
CE 10359
REGISTERED PROFESSIONAL ENGINEER

Date	No.	Description	By
		DOCK DESIGN	

Designed: JLC | Approved: SAM
Drawn: VHM | Scale: AS NOTED | Date: 1/27/03
Checked: JLC | Project No. 012360

R&M ENGINEERING–KETCHIKAN, INC.
355 CARLANNA LAKE ROAD
KETCHIKAN, ALASKA 99901

Client: CITY OF COFFMAN COVE
P.O. BOX 18135
COFFMAN COVE, ALASKA 99918

Project: COFFMAN COVE HARBOR EXPANSION

Sheet Description: FLOAT CONNECTION DETAILS

Sheet No. S6

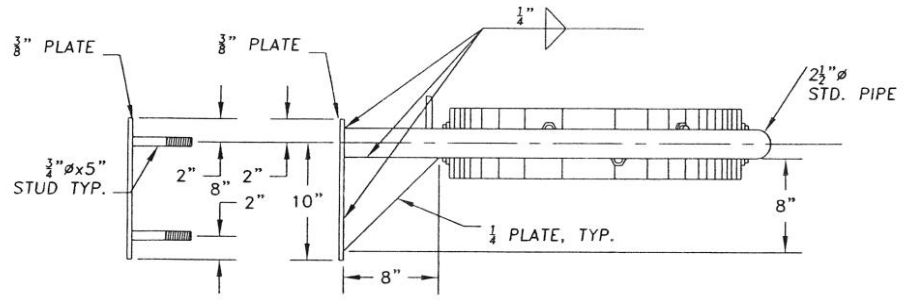

ELEVATION
N.T.S.

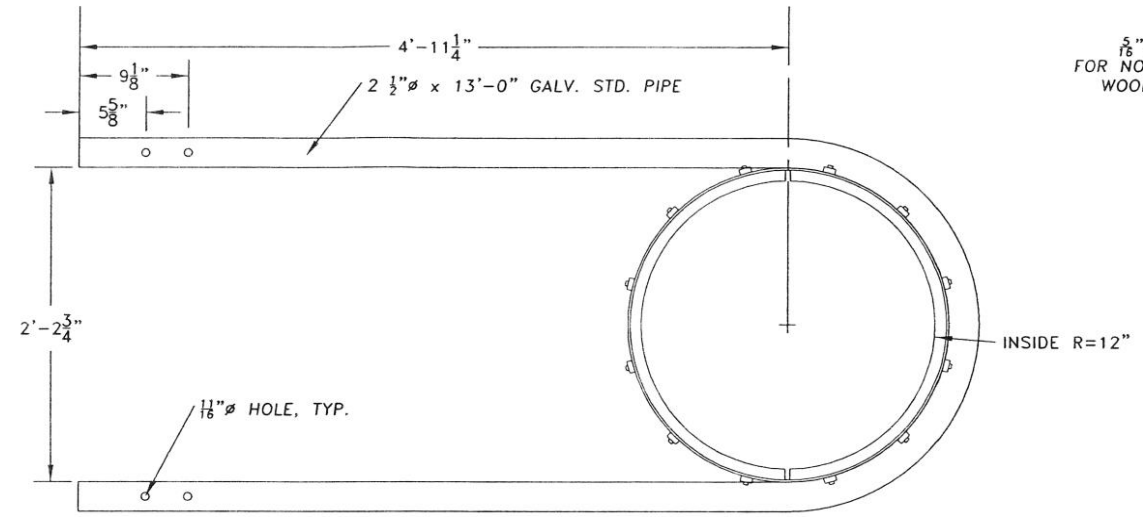

STEEL PIPE COLLAR
N.T.S

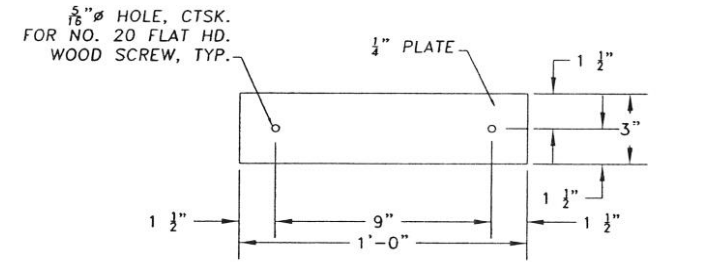

SLIDE PLATE
N.T.S.

SECTION D
N.T.S.

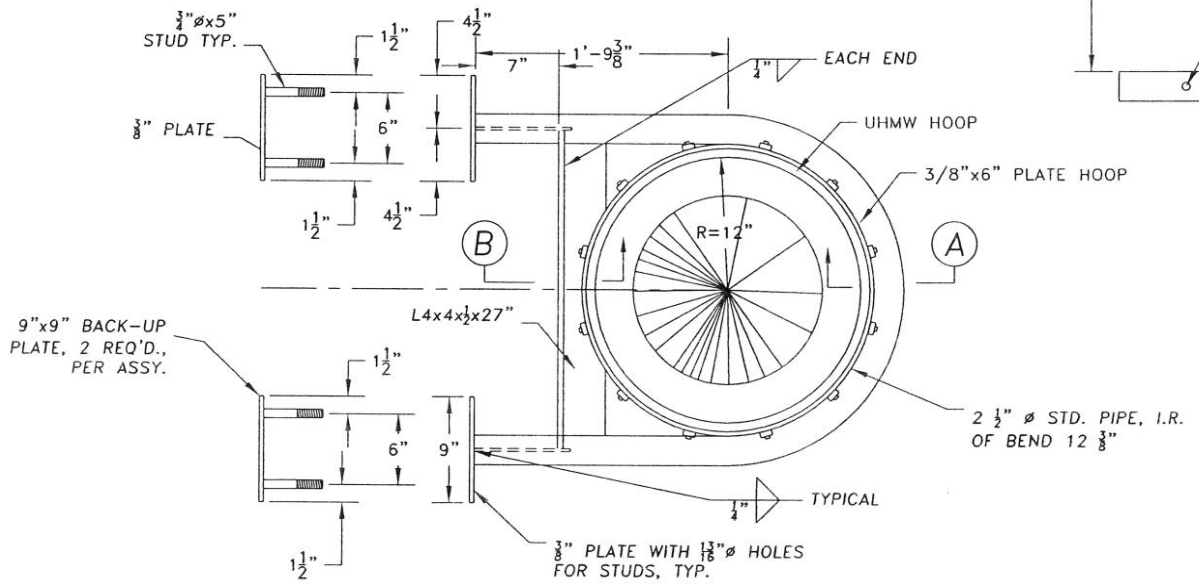

PLAN PIPE COLLAR ASSEMBLY

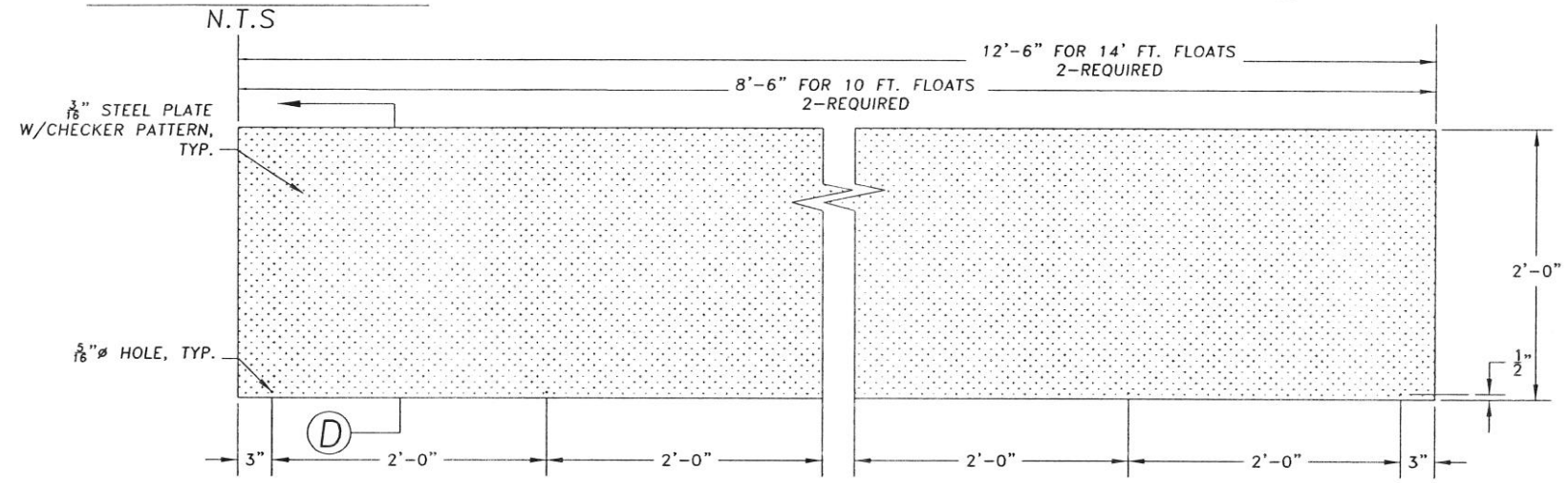

TRANSITION PLATE
N.T.S.

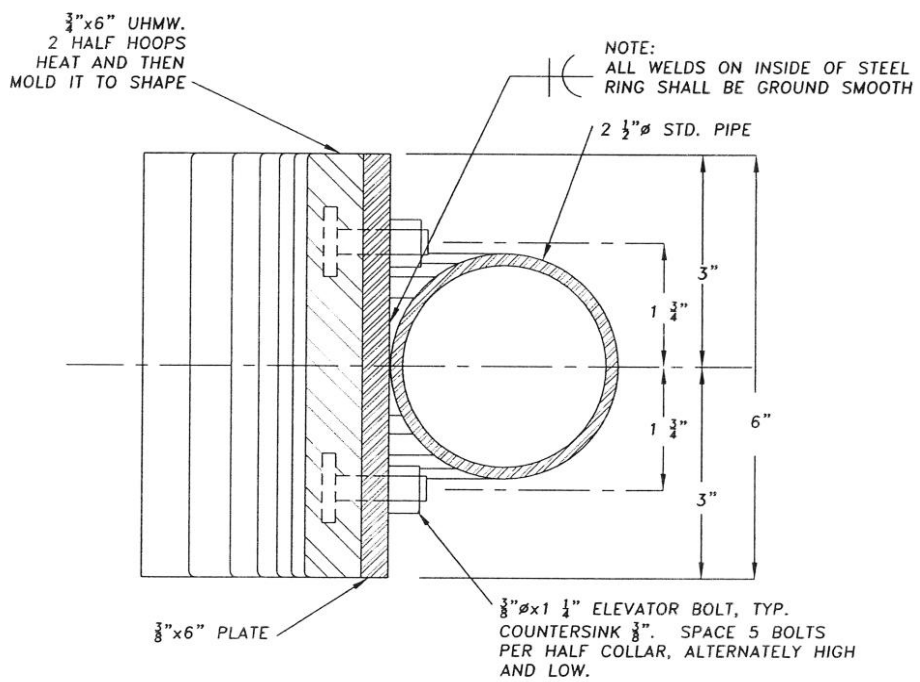

SECTION A
N.T.S

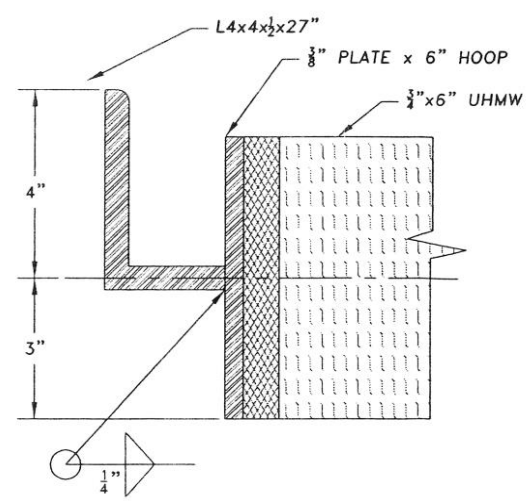

SECTION B
N.T.S

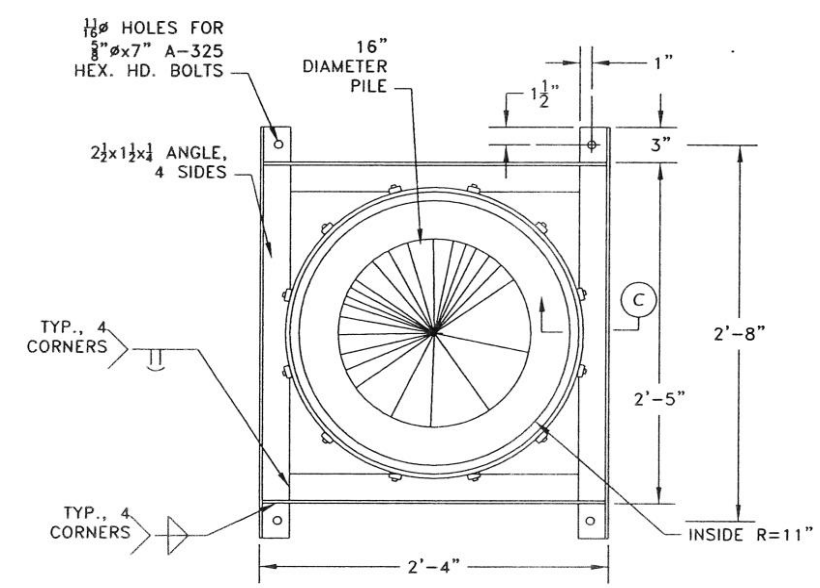

INTERIOR PILE COLLAR
N.T.S

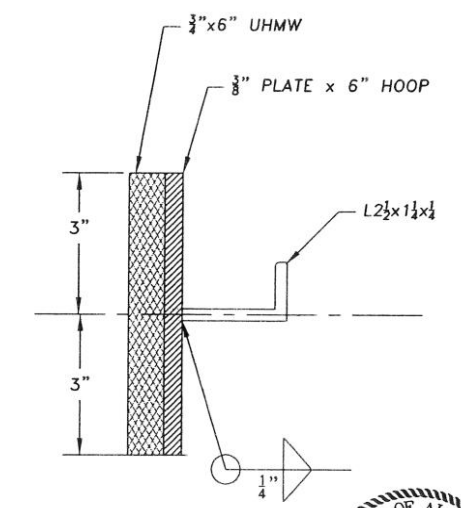

SECTION C
N.T.S

Date	No.	Description	By
		DOCK DESIGN	

Designed: JLC | Approved: SAM
Drawn: VHM | Scale: AS NOTED | Date: 1/27/03
Checked: JLC | Project No. 012360

R&M ENGINEERING-KETCHIKAN, INC.
355 CARLANNA LAKE ROAD
KETCHIKAN, ALASKA 99901

Client: CITY OF COFFMAN COVE
P.O. BOX 18135
COFFMAN COVE, ALASKA 99918

Project: COFFMAN COVE HARBOR EXPANSION

Sheet Description: PILE COLLAR DETAILS

Sheet No. S7

STATE OF ALASKA
49TH
JIM COSTALES
CE 10359
REGISTERED PROFESSIONAL ENGINEER

NOTES:
1.) SPACE 2x10 MILLED DECKING $\frac{1}{2}$" APART. STAGGER SPLICES IN DECKING OVER STRINGERS.
2.) COUNTERSINK ALL STRINGERS W/BOLTS IN CONTACT WITH DECKING.
3.) ALL MATERIAL S4S EXCEPT DECKING (MILLED S1S2E).
4.) ALL BOLTS CALLED OUT SHALL INCLUDE NUTS. PROVIDE WASHERS AS PER SPEC.
5.) ALL CONNECTIONS ARE BOLTED USING $\frac{5}{8}$"ø ECON. HD. BOLTS W/LUGS UNLESS NOTED OTHERWISE.
6.) USE 10" GALVANIZED CLEATS FOR THIRTY FOOT STALLS (SIX PER STALL).
7.) USE 12" GALVANIZED CLEATS FOR FORTY FOOT STALLS (SIX PER STALL).

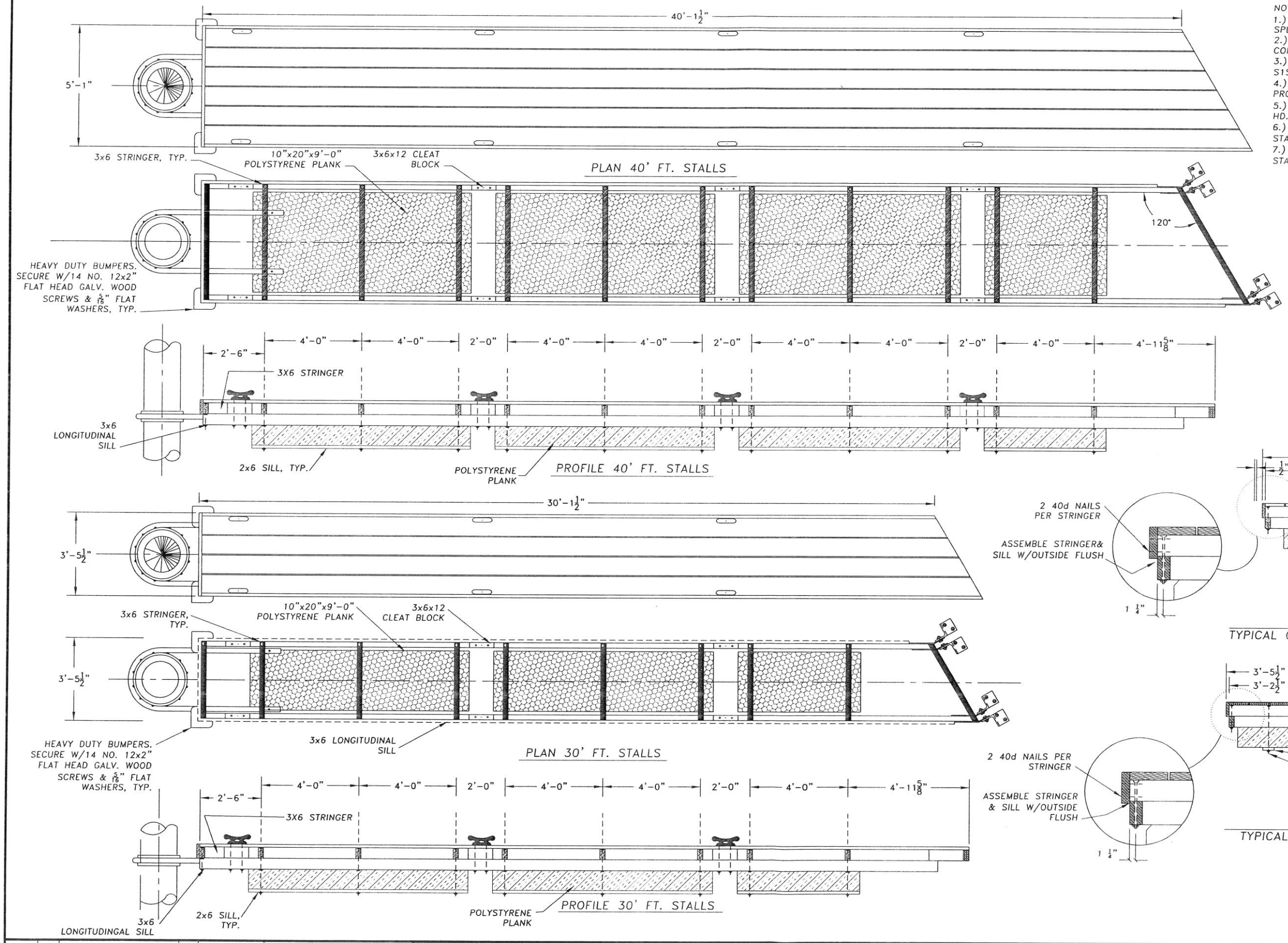

STATE OF ALASKA 49th JIM COSTALES CE 10359 REGISTERED PROFESSIONAL ENGINEER

Date	No.	Description	By
		DOCK DESIGN	

Designed: JLC | Approved: SAM
Drawn: VHM | Scale: AS NOTED | Date 1/27/03
Checked: JLC | Project No. 012360

R&M ENGINEERING-KETCHIKAN, INC.
355 CARLANNA LAKE ROAD
KETCHIKAN, ALASKA 99901

Client: CITY OF COFFMAN COVE
P.O. BOX 18135
COFFMAN COVE, ALASKA 99918

Project: COFFMAN COVE HARBOR EXPANSION

Sheet Description: FINGER FLOAT DETAILS

Sheet No. S8

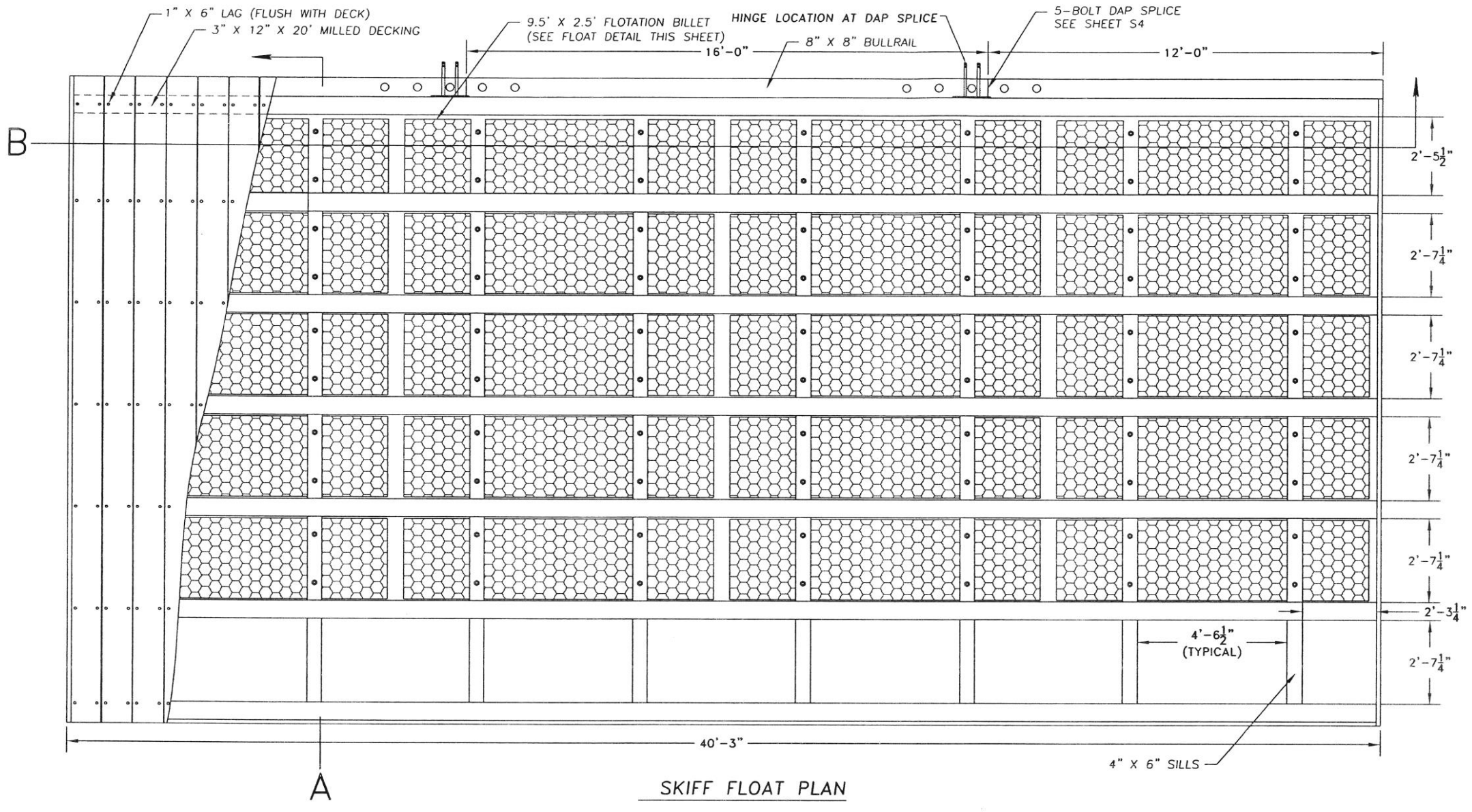

SKIFF FLOAT PLAN

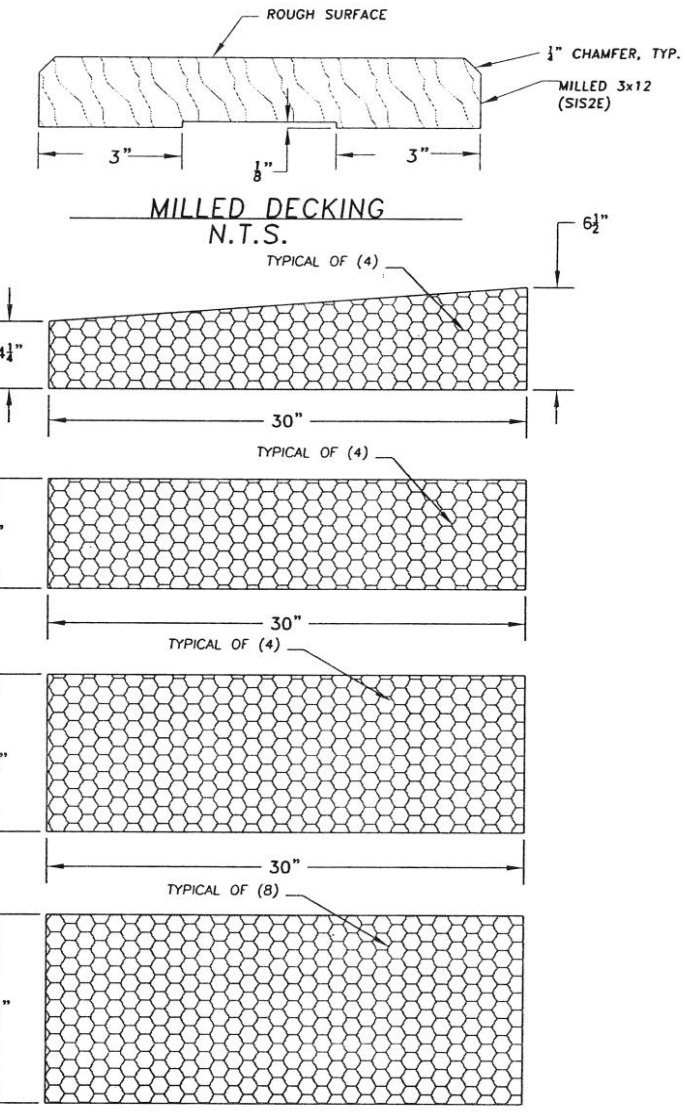

FLOTATION BILLET DETAIL

GLU-LAM SIZES			
NO.	HEIGHT A	HEIGHT B	W
1	5"	5 ½"	6¾"
2	7¾"	8¼"	6¾"
3	10⅝"	11⅛"	6¾"
4	1'-1½"	1'-2"	6¾"
5	1'-4⅜"	1-4⅞"	6¾"
6	1'-7¼"7	1'-7¾"	6¾"
7	1'-9⅞""	1'-10⅜"	6¾"

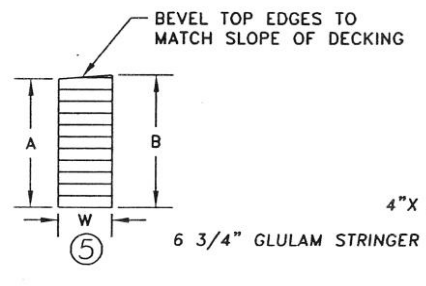

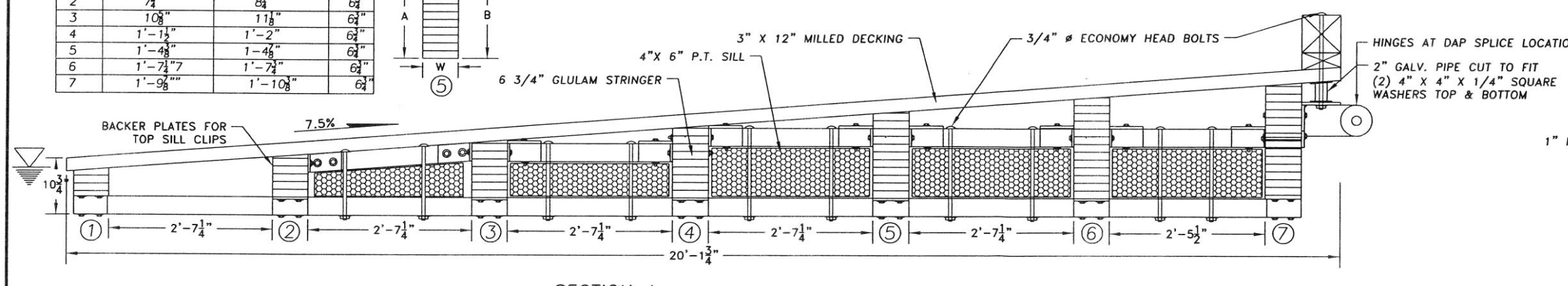

SECTION A

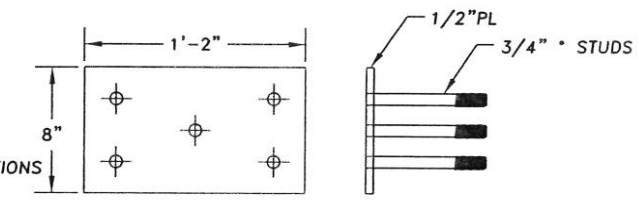

BACKER PLATE

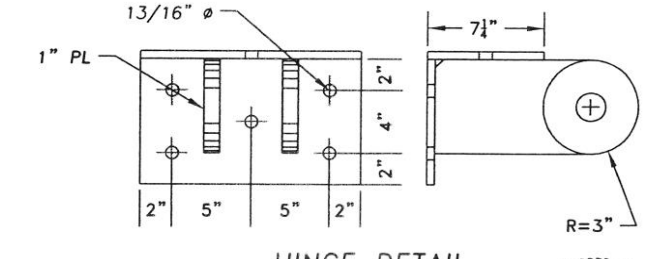

HINGE DETAIL

Date	No.	Description	By
		DOCK DESIGN	

Designed: JLC | Approved: SAM
Drawn: VHM | Scale: AS NOTED | Date: 1/27/03
Checked: JLC | Project No. 012360

R&M ENGINEERING-KETCHIKAN, INC.
355 CARLANNA LAKE ROAD
KETCHIKAN, ALASKA 99901

Client: CITY OF COFFMAN COVE
P.O. BOX 18135
COFFMAN COVE, ALASKA 99918

Project: COFFMAN HARBOR DOCK EXPANSION

Sheet Description: SKIFF FLOAT PLAN

Sheet No. S9

STATE OF ALASKA
JIM COSTALES
CE 10359
REGISTERED PROFESSIONAL ENGINEER

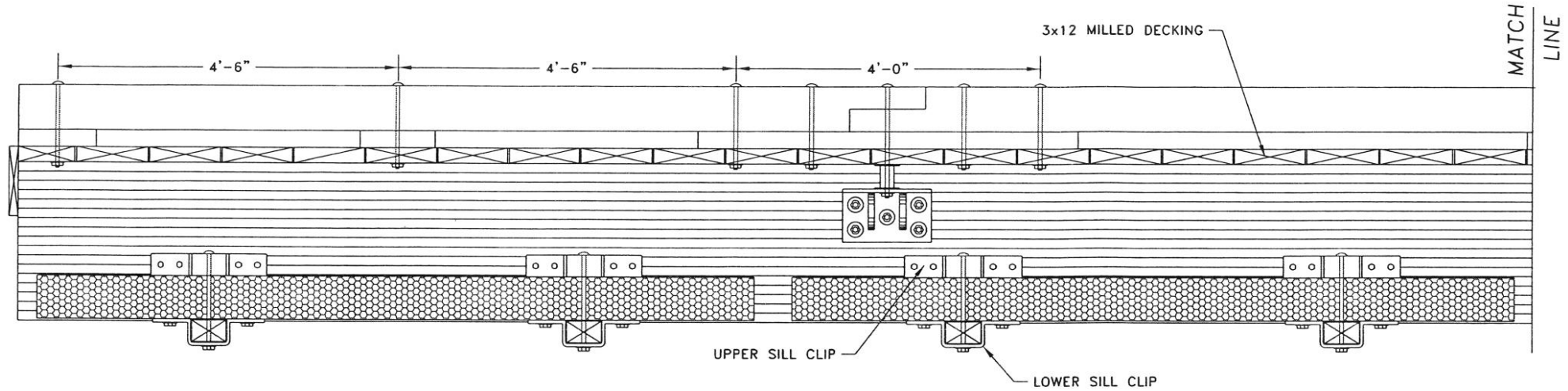

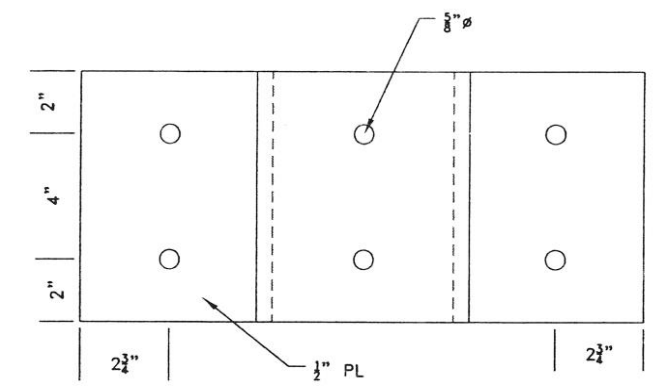

PLAN

NOTE:
HINGES SHOWN THIS SIDE FOR CLARITY

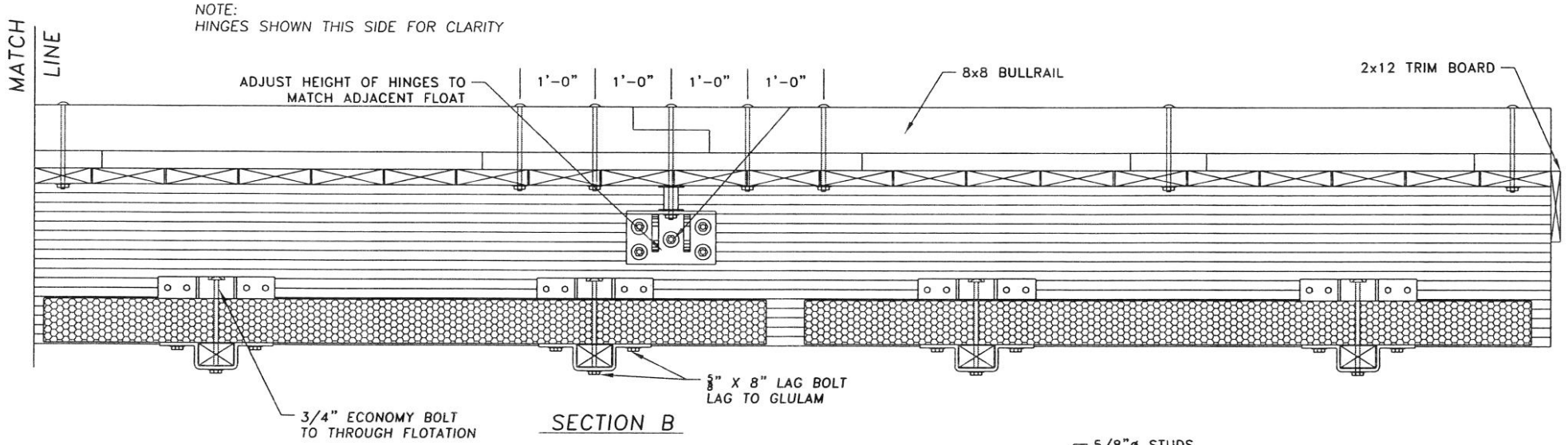

SECTION B

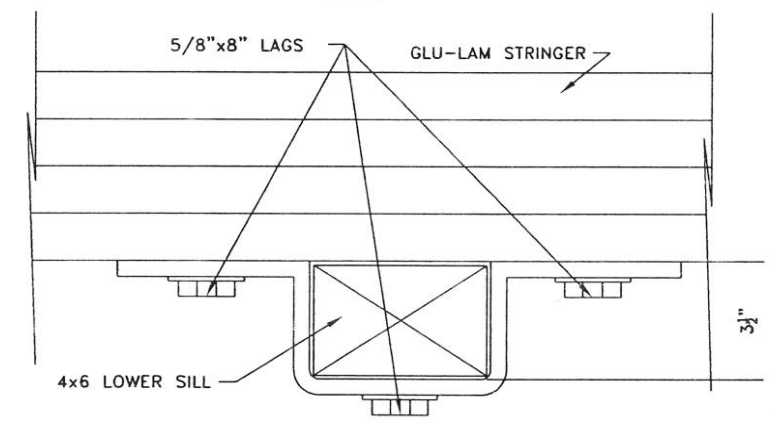

LOWER SILL CONNECTION
N.T.S.

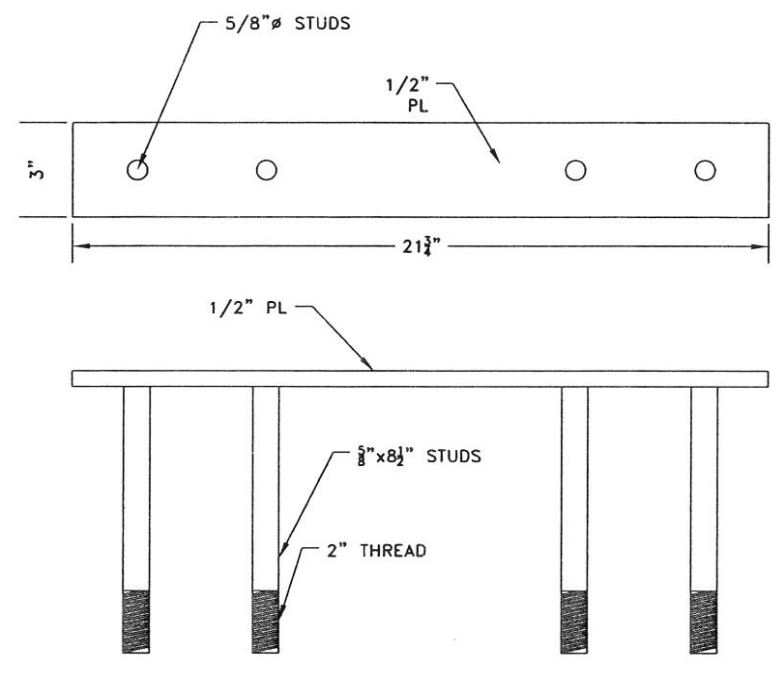

BACKER PLATE
N.T.S.

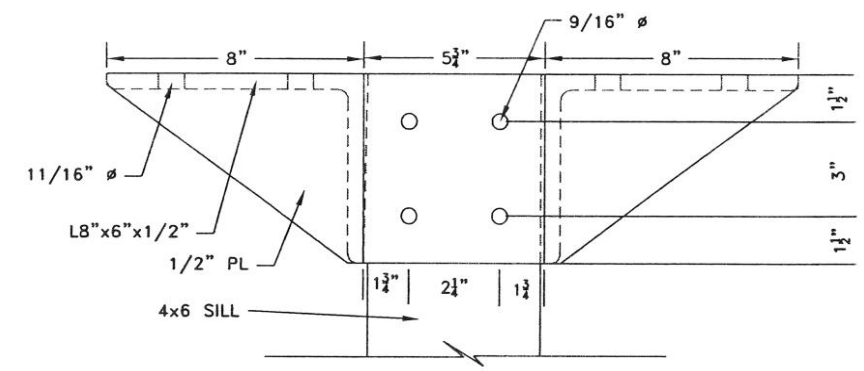

PLAN

NOTE:
1. STRINGERS #'S 3,4,5 & 6 ARE TO BE THROUGH BOLTED WITH ⅝"x8½" BOLTS.
2. BACKER PLATES ARE TO BE USED ON BEAMS #2 AND #7.

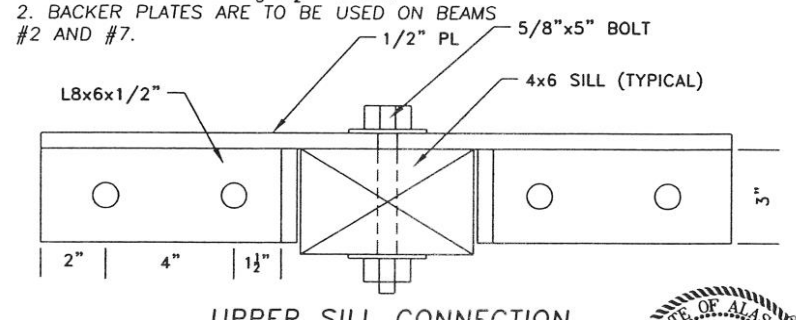

UPPER SILL CONNECTION
N.T.S.

STATE OF ALASKA
49th
JIM COSTALES
CE 10359
REGISTERED PROFESSIONAL ENGINEER

Date	No.	Description	By
		DOCK DESIGN	

Designed: JLC | Approved: SAM
Drawn: VHM | Scale: AS NOTED | Date: 1/27/03
Checked: JLC | Project No. 012360

R&M ENGINEERING-KETCHIKAN, INC.
355 CARLANNA LAKE ROAD
KETCHIKAN, ALASKA 99901

Client: CITY OF COFFMAN COVE
P.O. BOX 18135
COFFMAN COVE, ALASKA 99918

Project: COFFMAN COVE HARBOR EXPANSION

Sheet Description: SKIFF FLOAT DETAILS

Sheet No. S10

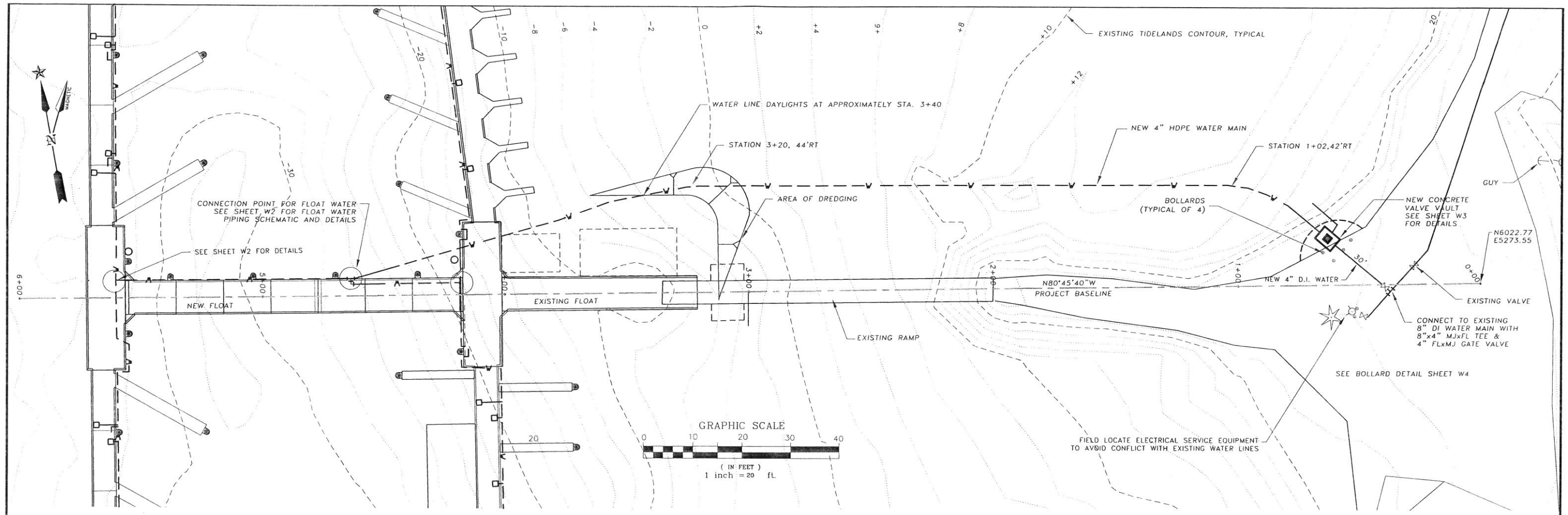

PLAN VIEW

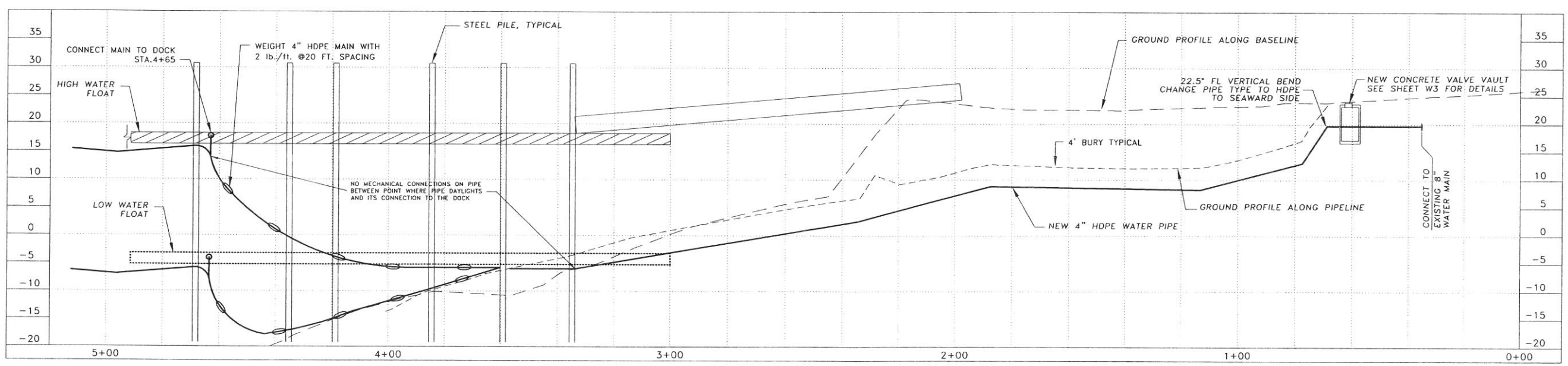

PROFILE VIEW

Date	No.	Description	By
		DOCK DESIGN	

Designed: TSS | Approved: SAM
Drawn: TSS | Scale: AS NOTED | Date: 1/27/03
Checked: SAM | Project No. 012360

R&M ENGINEERING-KETCHIKAN, INC.
355 CARLANNA LAKE ROAD
KETCHIKAN, ALASKA 99901

Client: CITY OF COFFMAN COVE
P.O. BOX 18135
COFFMAN COVE, ALASKA 99918

Project: COFFMAN COVE HARBOR EXPANSION

Sheet Description: WATER LINE SITE PLAN

Sheet No. W1

STATE OF ALASKA
49th
JIM COSTALES
CE 10359
REGISTERED PROFESSIONAL ENGINEER

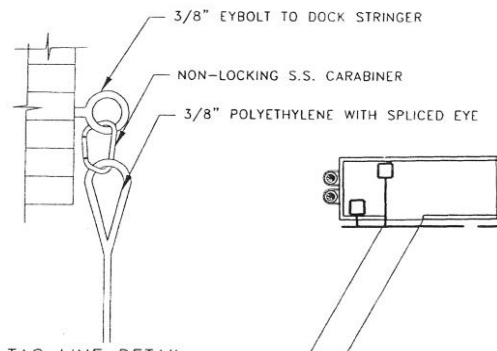

TAG LINE DETAIL

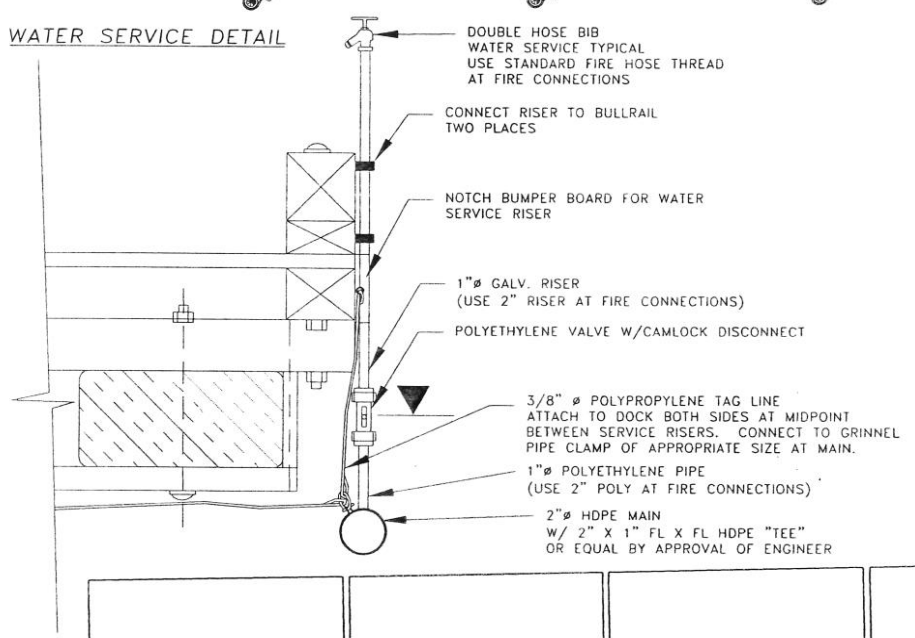

WATER SERVICE DETAIL

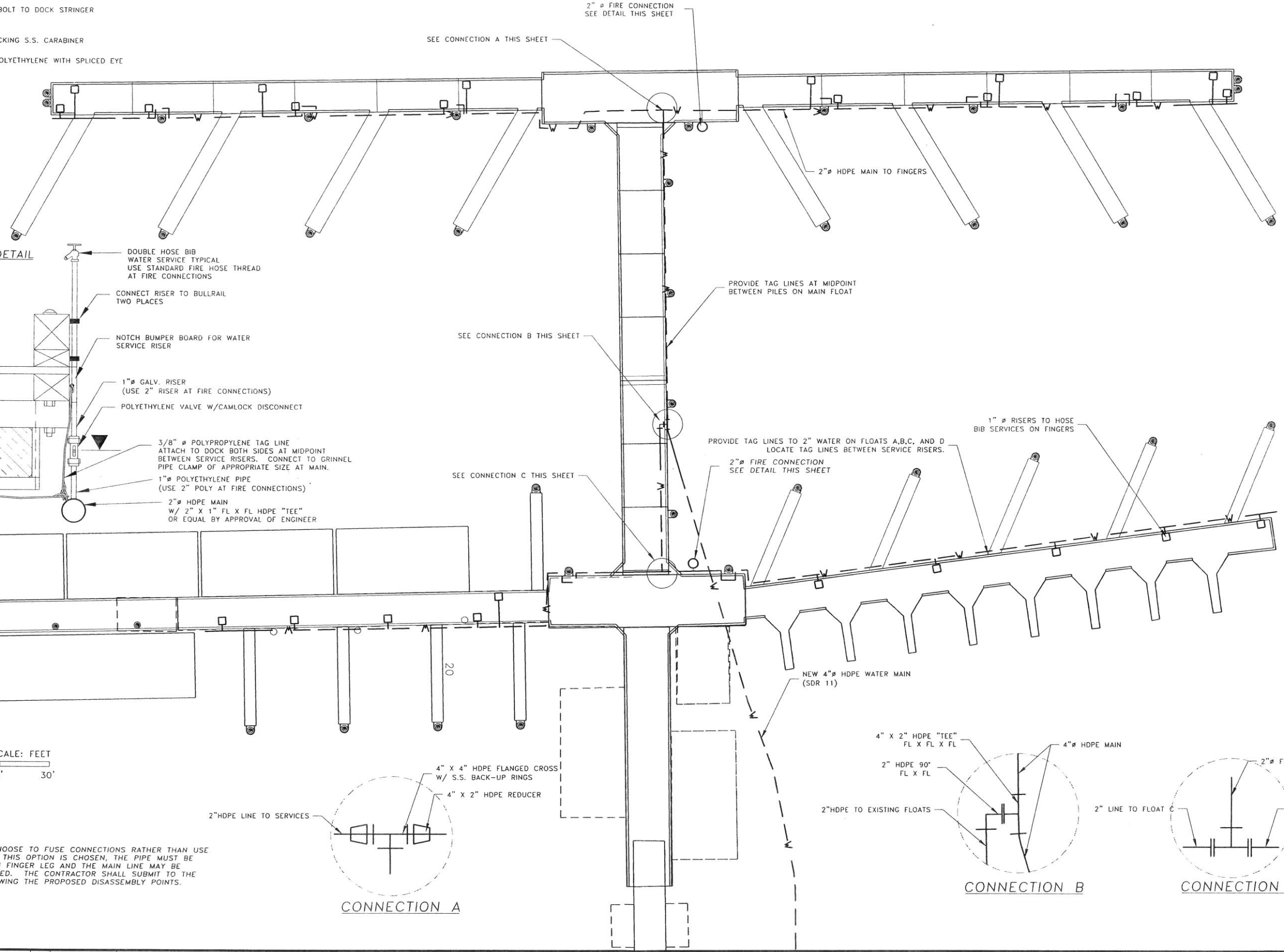

GRAPHIC SCALE: FEET

0' 15' 30'

CONNECTION A

CONNECTION B

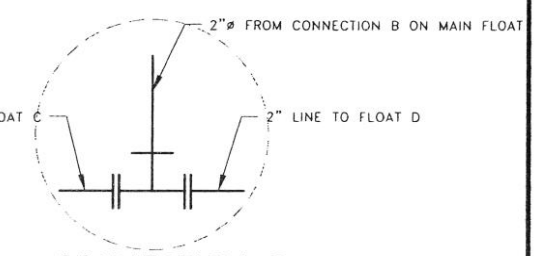

CONNECTION C

NOTE:
THE CONTRACTOR MAY CHOOSE TO FUSE CONNECTIONS RATHER THAN USE FLANGES AS SHOWN. IF THIS OPTION IS CHOSEN, THE PIPE MUST BE INSTALLED SO THAT EACH FINGER LEG AND THE MAIN LINE MAY BE INDIVIDUALLY DISCONNECTED. THE CONTRACTOR SHALL SUBMIT TO THE ENGINEER A LAYOUT SHOWING THE PROPOSED DISASSEMBLY POINTS.

Date	No.	Description	By
		DOCK DESIGN	

Designed: TSS | Approved: SAM
Drawn: TSS | Scale: AS NOTED | Date: 1/27/03
Checked: SAM | Project No. 012360

R&M ENGINEERING-KETCHIKAN, INC.
355 CARLANNA LAKE ROAD
KETCHIKAN, ALASKA 99901

Client: CITY OF COFFMAN COVE
P.O. BOX 18135
COFFMAN COVE, ALASKA 99918

Project: COFFMAN COVE HARBOR EXPANSION

Sheet Description: WATER LINE DOCK PLAN

Sheet No. W2

STATE OF ALASKA
49th
JIM COSTALES
CE 10359
REGISTERED PROFESSIONAL ENGINEER

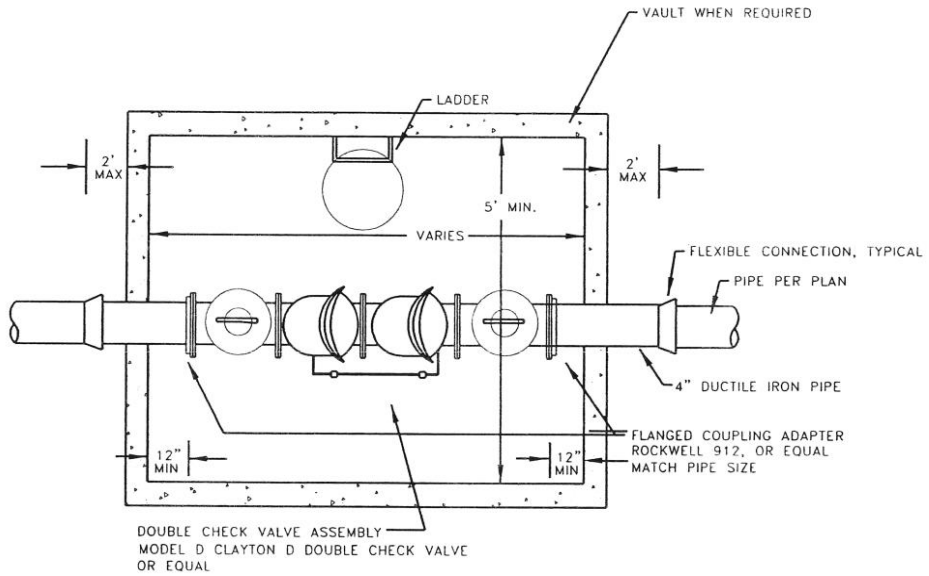

FRP VAULT DETAIL
N.T.S.

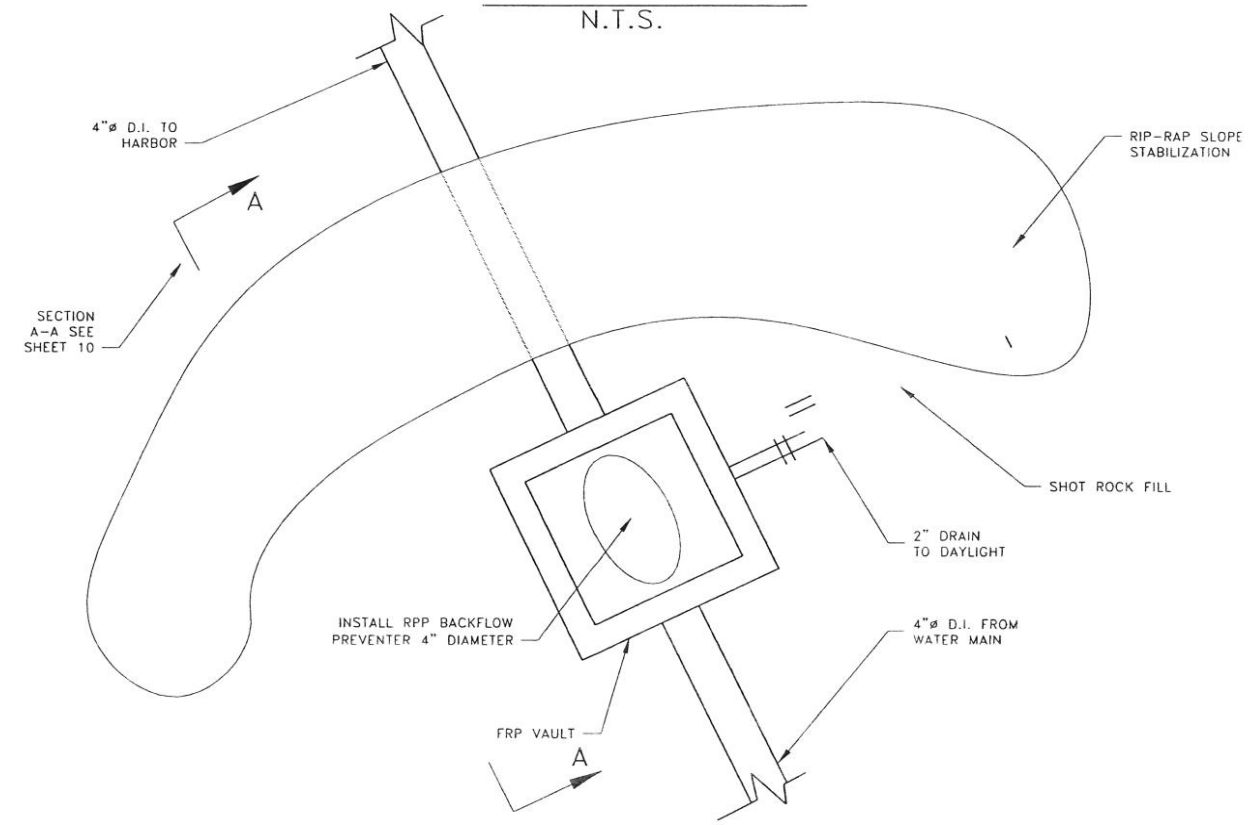

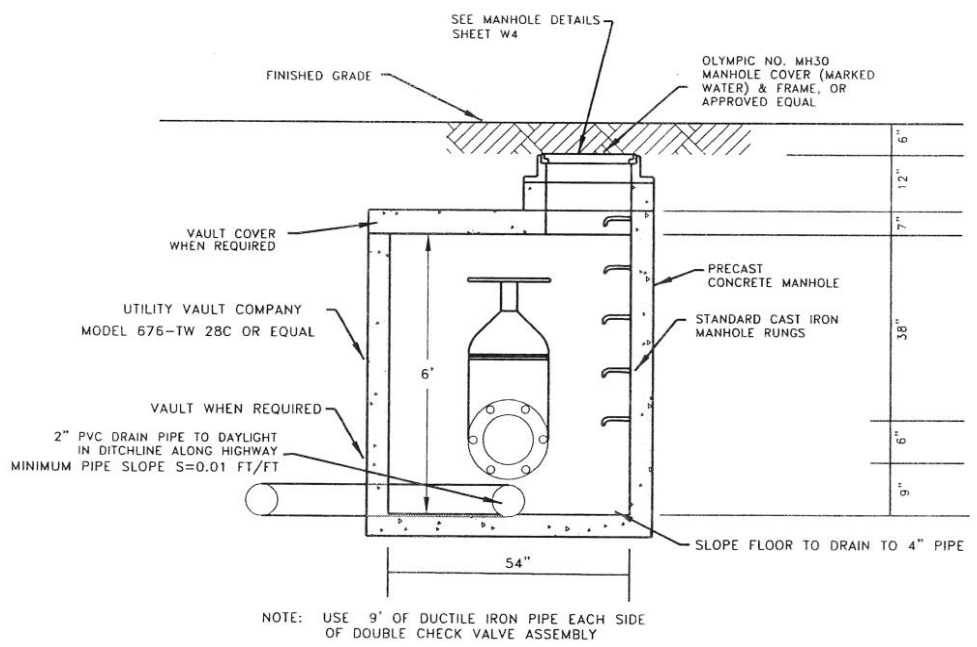

NOTE: USE 9' OF DUCTILE IRON PIPE EACH SIDE OF DOUBLE CHECK VALVE ASSEMBLY

1 / D4 BACKFLOW PREVENTER
NOT TO SCALE

NOTES:
1.) KEY FIRST COURSE OF RIP-RAP 24" INTO UNDISTURBED MATERIAL.
2.) BED BURIED PORTION OF PIPE WITHIN A LENS OF 6" D-1 COMPACTED TO 95% DRY DENSITY.
3.) ALONG BEACH PIPE SHALL BE BEDDED WITH 2" MINUS MATERIAL. NATIVE MATERIAL IS ACCEPTABLE IF SIZE CRITERIA CAN BE MET.
4.) CAP BEACH PORTION OF PIPE TRENCH WITH NATIVE MATERIAL.
5.) WHEN THE PORTION OF PIPING ALONG THE BEACH BEGINS, IT SHALL PROCEED WITHOUT INTERRUPTION UNTIL ALL PIPE INSTALLATION, TRENCHING, AND BACKFILL OPERATIONS ARE COMPLETED.

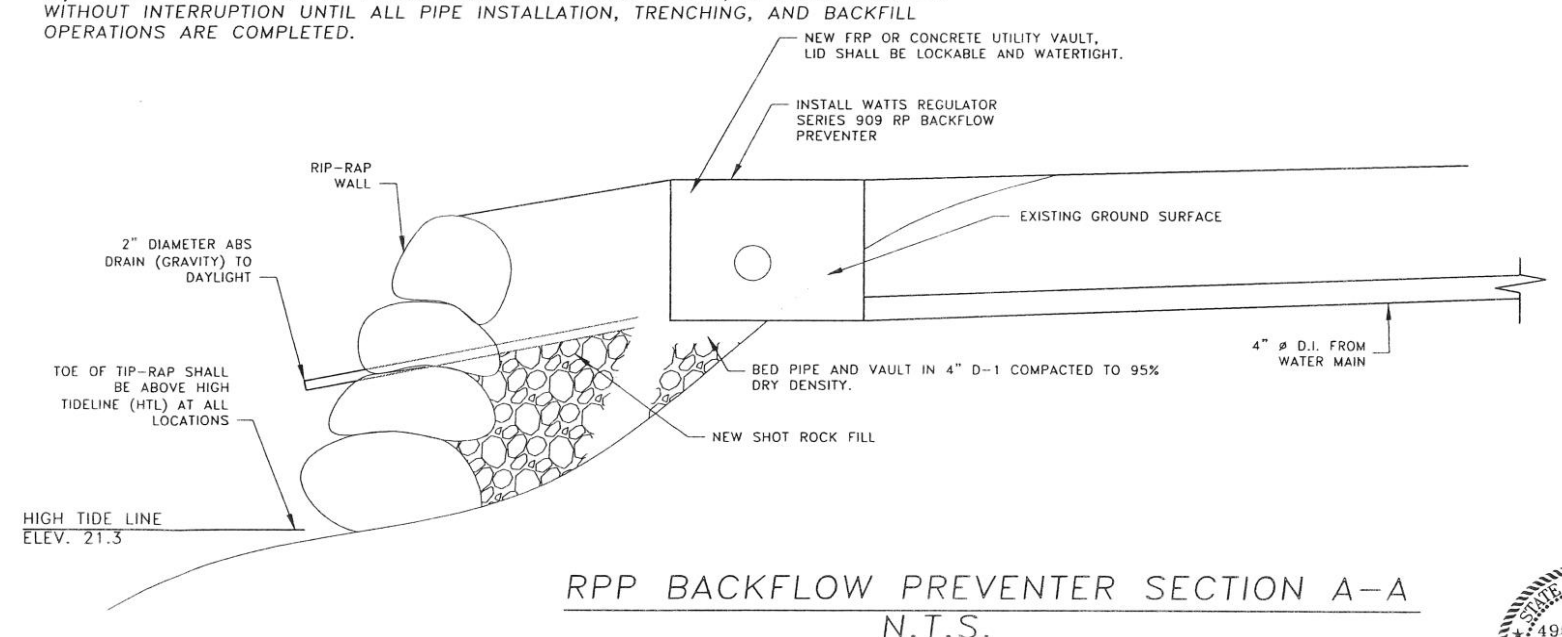

RPP BACKFLOW PREVENTER SECTION A-A
N.T.S.

Date	No.	Description	By
		DOCK DESIGN	

Designed: TSS | Approved: SAM
Drawn: TSS | Scale: AS NOTED | Date: 1/27/03
Checked: SAM | Project No. 012360

R&M ENGINEERING-KETCHIKAN, INC.
355 CARLANNA LAKE ROAD
KETCHIKAN, ALASKA 99901

Client: CITY OF COFFMAN COVE
P.O. BOX 18135
COFFMAN COVE, ALASKA 99918

Project: COFFMAN COVE HARBOR EXPANSION

Sheet Description: WATER SYSTEM DETAILS

Sheet No. W3

STATE OF ALASKA
49101
JIM COSTALES
CE 10359
REGISTERED PROFESSIONAL ENGINEER

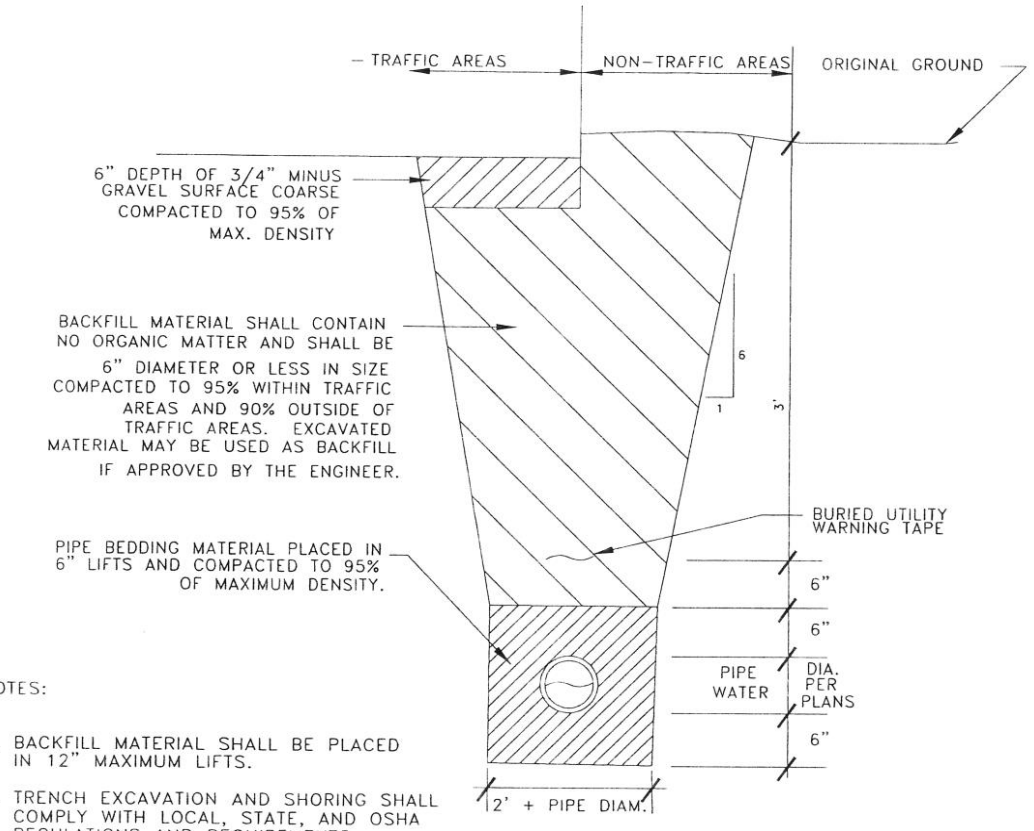

NOTES:

1. BACKFILL MATERIAL SHALL BE PLACED IN 12" MAXIMUM LIFTS.
2. TRENCH EXCAVATION AND SHORING SHALL COMPLY WITH LOCAL, STATE, AND OSHA REGULATIONS AND REQUIREMENTS. INDICATED SLOPE IS FOR PAY QUANTITY DETERMINATION ONLY FOR IMPORTED BACKFILL
3. GRAVEL AND RESURFACING REQUIREMENTS.
4. IF UNSUITABLE PIPE FOUNDATION MATERIAL IS ENCOUNTERED DURING EXCAVATION, ENGINEER MAY DIRECT THE CONTRACTOR TO OVER-EXCAVATE AND BACKFILL WITH SUITABLE MATERIAL. THE DITCH LINE, IF ONE EXISTS, SHALL BE RESHAPED IN SUCH A MANNER TO ALLOW POSITIVE DRAINAGE TO MATCH PRE-CONSTRUCTION CONDITIONS.

NOT TO SCALE

1 / W4 TYPICAL TRENCH SECTION

NOT TO SCALE

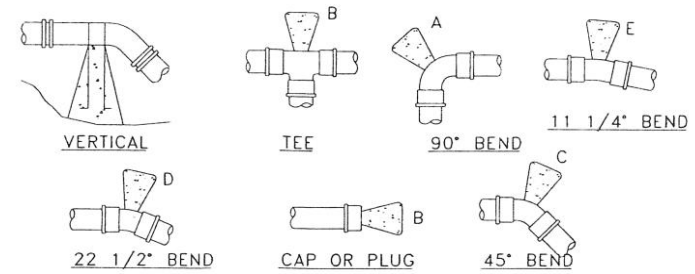

THRUST BLOCK TABLE						
PIPE DIA	MINIMUM BEARING AREA AGAINST UNDISTURBED SOIL IN SQ. FT.					
	A	B	C	D	E	X
4"	2	2	2	2	2	NONE
6"	4	3	2	2	2	NONE
8"	7	5	4	2	2	3

NOTES:

1. SQ. FT. OF CONC. THRUST AREA BASED ON 150 PSI INTERNAL PRESSURE, SAFE SOIL BEARING OF 3,000 PSF AND A SAFETY FACTOR OF 1.5.
2. BEARING AREA MAY VARY IN SIZE TO SUIT DIFFERENT INTERNAL PRESSURES, DIFFERENT SOIL BEARING VALUES AND SITE CONDITIONS OF ENGINEERS APPROVAL.
3. CONCRETE BLOCKING SHALL BE CAST IN PLACE & HAVE A MIN. OF 1/4 SQ. FT. BEARING AGAINST THE FITTINGS.
4. BLOCK SHALL BE CLEAR OF ALL JOINTS TO PERMIT DISMANTLING JOINTS.
5. THRUST BLOCKS NOT REQUIRED AT FITTINGS EXCEPT WHERE INDICATED.
6. 6 MIL POLYETHYLENE MUST BE INSTALLED BETWEEN CONC. THRUST BLOCK & PIPE.
7. ANCHORS FOR VERTICAL BENDS SHALL BE DESIGNED SO THAT CONCRETE MASS PROVIDES SAFETY FACTOR OF 1.5.
8. ALL BENDS HORIZONTAL, EXCEPT WHERE INDICATED OTHERWISE.

2 / W4 THRUST BLOCK DETAIL

NOT TO SCALE

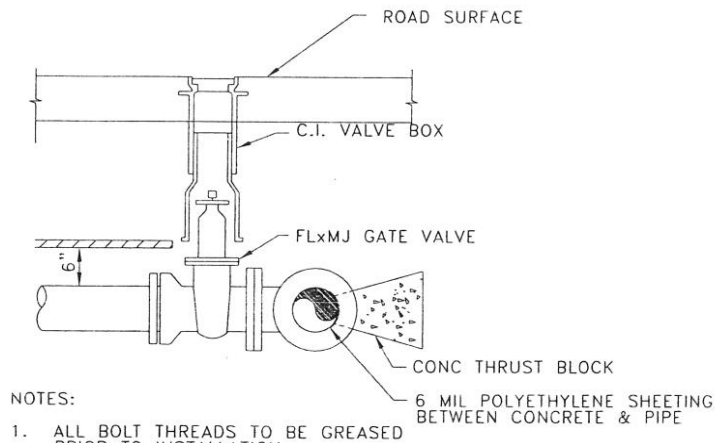

NOTES:

1. ALL BOLT THREADS TO BE GREASED PRIOR TO INSTALLATION.
2. THRUST BLOCK MAY BE OMITTED IF MECHANICAL JOINT RESTRAINTS INSTALLED

3 / W4 TYPICAL BURIED WATER SERVICE – LARGER THAN 2"

NOT TO SCALE

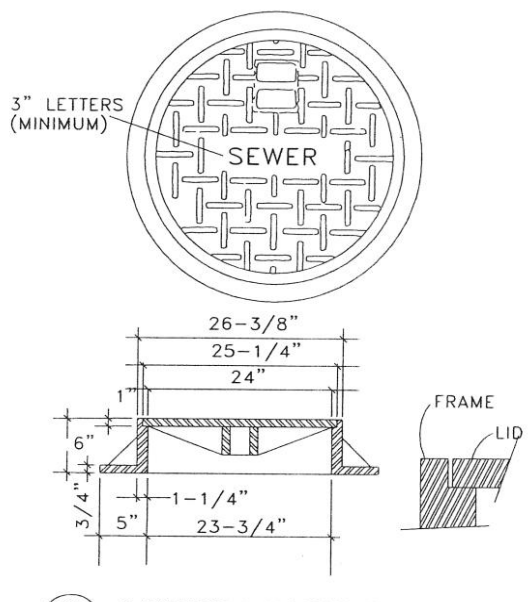

NOTES:

1. COVER AND FRAME SHALL BE HEAVY DUTY AND RATED FOR H-20 LOADING. MINIMUM TOTAL WEIGHT SHALL BE 360 POUNDS.
2. COVER AND SEALING GASKET SHALL BE NEENAH SELF SEALING LIDS OR APPROVED EQUAL. LOCKDOWN BOLTS NOT ALLOWED.
3. FRAME MUST BE MACHINED TO FIT WATERTIGHT COVER. COVER SHALL HAVE THE WORD "SEWER" CAST IN, AND SHALL BE PROVIDED WITH AN INTEGRAL LIFTING HANDLE.
4. FRAME AND COVER DIMENSIONS SHALL BE IN ACCORDANCE WITH THE GUIDELINES INDICATED. VARIATIONS MUST BE APPROVED BY THE ENGINEER.
5. ALL FRAMES AND COVERS SHALL BE IDENTICAL FOR ALL MANHOLE INSTALLATIONS.

6 / W4 SANITARY MANHOLE FRAME AND COVER

NOT TO SCALE

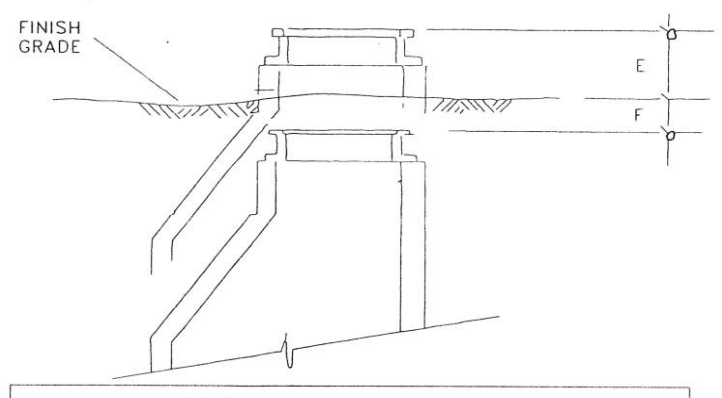

LOCATION	E	F(IN.)
BACKYARDS, SHOULDERS AND GRAVEL STREETS, AREAS WHERE TRAVELED		4-6
HIGHWAY R.O.W. OUTSIDE OF TRAFFIC AREAS AND UNDEVELOPED AREAS		2

NOTES:

1. MANHOLE LID MUST CONFORM TO THE GRADE AND CROSS SLOPE OF THE STREET. DIMENSION IS TO THE TOP OF EMBOSSED LETTERING IF THIS IS HIGHER THAN THE FRAME.
2. THESE GIVEN HEIGHTS WILL CONFORM TO ALL SANITARY SEWER CLEANOUTS INSTALLED WITHIN THIS CONTRACT.
3. BURIED CLEANOUTS AND MANHOLES SHALL BE MARKED WITH AN ORANGE CARSONITE MARKER, AT PROPERTY LINES, WITH REFERENCE OFFSET DISTANCE TO CLEANOUT. SEE DETAIL SHEET W20.

5 / W4 MANHOLE HEIGHTS

NOT TO SCALE

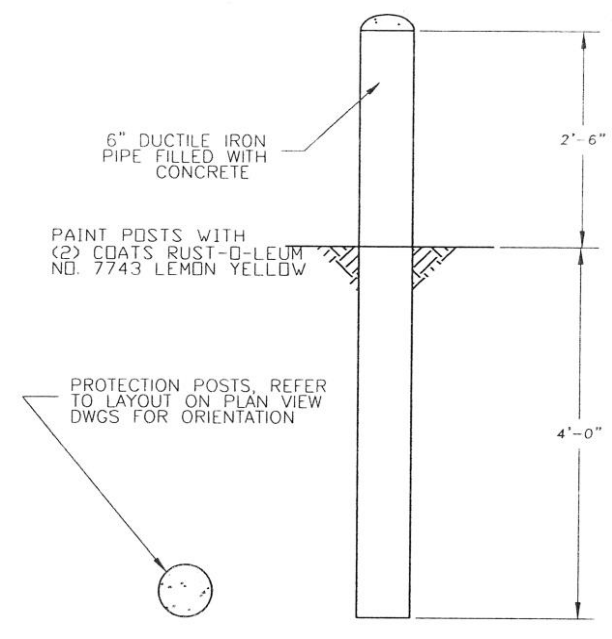

4 / W4 PROTECTIVE BOLLARD

NOT TO SCALE

Date	No.	Description	By
		DOCK DESIGN	

Designed: TSS | Approved: SAM
Drawn: TSS | Scale: AS NOTED | Date: 1/27/03
Checked: SAM | Project No. 012360

R&M ENGINEERING-KETCHIKAN, INC.
355 CARLANNA LAKE ROAD
KETCHIKAN, ALASKA 99901

Client: CITY OF COFFMAN COVE
P.O. BOX 18135
COFFMAN COVE, ALASKA 99918

Project: COFFMAN COVE HARBOR EXPANSION

Sheet Description: WATER SYSTEMS DETAILS

Sheet No. W4

STATE OF ALASKA
49th
JIM COSTALES
CE 10359
REGISTERED PROFESSIONAL ENGINEER

LEGEND

PCA	POWER CENTER "A" LAST LETTER DENOTES WHICH POWER CENTER IT IS; A, B, C, OR D
A □	TYPE A POWER PEDESTAL, SEE SHEET E-4 FOR DETAILS.
B □	TYPE B POWER PEDESTAL, SEE SHEET E-4 FOR DETAILS.
C □	TYPE C POWER PEDESTAL, SEE SHEET E-4 FOR DETAILS.
	LIGHT POLE. SEE SHEET E-5

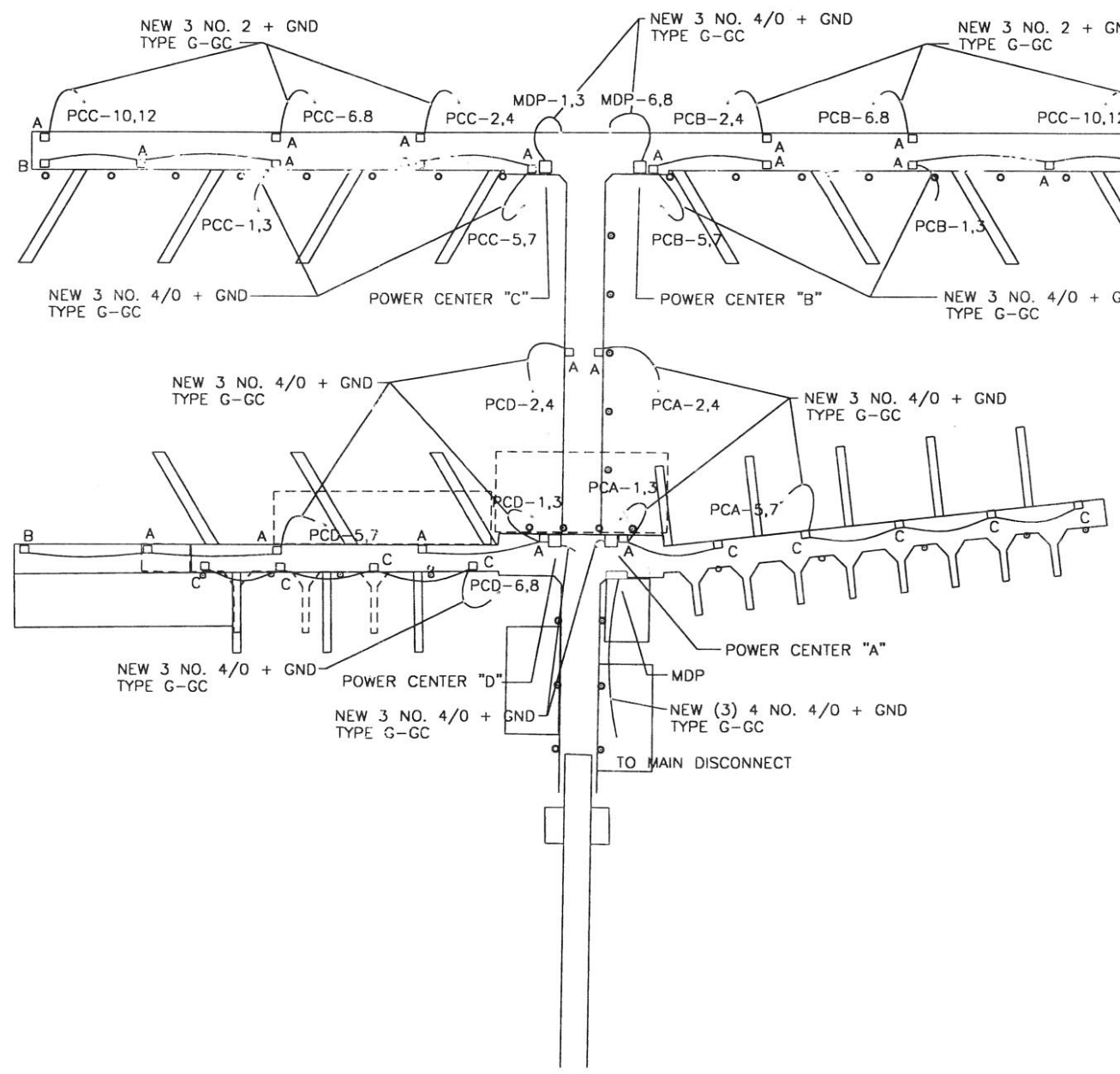

SITE PLAN - POWER

5 0 30 60
Feet

NOTES:

1. ALL POWER CENTERS SHALL COMPLY WITH DETAILS SHOWN ON SHEET E-3. SEE PANEL SCHEDULES FOR SIZES AND QUANTITES OF FEEDER CIRCUIT BREAKERS.

STATE OF ALASKA 49th Mark G. Morris EE 8613 REGISTERED PROFESSIONAL ENGINEER

IHH Electrical
5636 Glacier Highway, Juneau AK 99801
907-780-6520

Date	No.	Description	By
		PRELIMINARY DESIGNS	

Designed: MGM | Approved:
Drawn: SHS | Scale: AS NOTED | Date: 02/11/02
Checked: | Project No. 012360

R&M ENGINEERING-KETCHIKAN, INC.
355 CARLANNA LAKE ROAD
KETCHIKAN, ALASKA 99901

Client: CITY OF COFFMAN COVE
P.O. BOX 18135
COFFMAN COVE, ALASKA 99918

Project: COFFMAN COVE BOAT RAMP EXPANSION

Sheet Description: SITE PLAN - POWER

Sheet No. E-1

X

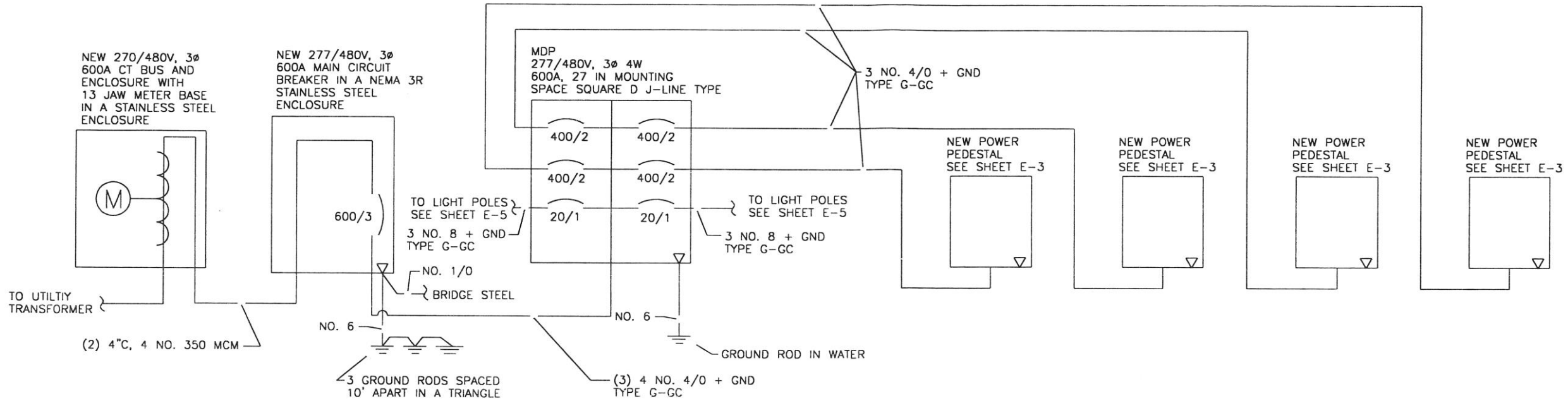

NOTES:

1. MOUNT MAIN CIRCUIT BREAKER AND CT BASE CABINET ON A UNISTRUT RACK ADJACENT TO TOP OF RAMP SEE SHEET E-__ FOR DETAIL OF MOUNTING RACK.

SINGLE LINE DIAGRAM

PANEL PCA	SIZE	VOLTS, PHASE	MOUNTING	LOCATION
	800A	120/240V, 1ø	SEE SHEET E-3	SEE SHEET E-1

CKT NO.	DESCRIPTION	C/B SIZE	KVA CKT	KVA Aø	KVA Bø	KVA CKT	C/B SIZE	DESCRIPTION	CKT NO.
1	30' STALL PEDESTAL	250/2	20			12	100/2	MAIN FLOAT PEDESTAL	2
3	——	——	20			12	——	——	4
5	30' STALL PEDESTAL	250/2	26					SPACE	6
7	——	——	26						8
9	SPACE								10
11									12

TOTAL CONNECTED LOAD = 126 KVA — TOTAL DEMAND = 100 KVA / 420 AMPS

PANEL PCC	SIZE	VOLTS, PHASE	MOUNTING	LOCATION
	800A	120/240V, 1ø	SEE SHEET E-3	SEE SHEET E-1

CKT NO.	DESCRIPTION	C/B SIZE	KVA CKT	KVA Aø	KVA Bø	KVA CKT	C/B SIZE	DESCRIPTION	CKT NO.
1	40' STALL PEDESTAL	250/2	27			12	100/2	TRANSIENT PEDESTAL	2
3	——	——	27			12	——	——	4
5	40' STALL PEDESTAL	250/2	24			12	100/2	TRANSIENT PEDESTAL	6
7	——	——	24			12	——	——	8
9	SPACE					12	100/2	TRANSIENT PEDESTAL	10
11						12	——	——	12

TOTAL CONNECTED LOAD = 180 KVA — TOTAL DEMAND = 126 KVA / 525 AMPS

PANEL PCB	SIZE	VOLTS, PHASE	MOUNTING	LOCATION
	800A	120/240V, 1ø	SEE SHEET E-3	SEE SHEET E-1

CKT NO.	DESCRIPTION	C/B SIZE	KVA CKT	KVA Aø	KVA Bø	KVA CKT	C/B SIZE	DESCRIPTION	CKT NO.
1	40' STALL PEDESTAL	250/2	27			12	100/2	TRANSIENT PEDESTAL	2
3	——	——	27			12	——	——	4
5	40' STALL PEDESTAL	250/2	24			12	100/2	TRANSIENT PEDESTAL	6
7	——	——	24			12	——	——	8
9	SPACE					12	100/2	TRANSIENT PEDESTAL	10
11						12	——	——	12

TOTAL CONNECTED LOAD = 180 KVA — TOTAL DEMAND = 126 KVA / 525 AMPS

PANEL PCD	SIZE	VOLTS, PHASE	MOUNTING	LOCATION
	800A	120/240V, 1ø	SEE SHEET E-3	SEE SHEET E-1

CKT NO.	DESCRIPTION	C/B SIZE	KVA CKT	KVA Aø	KVA Bø	KVA CKT	C/B SIZE	DESCRIPTION	CKT NO.
1	40' STALL PEDESTAL	250/2	24			12	100/2	MAIN FLOAT PEDESTAL	2
3	——	——	24			12	——	——	4
5	40' STALL PEDESTAL	250/2	26			26	250/2	30' STALL PEDESTAL	6
7	——	——	26			26	——	——	8
9	SPACE							SPACE	10
11									12

TOTAL CONNECTED LOAD = 194 KVA — TOTAL DEMAND = 136 KVA / 567 AMPS

MDP	SIZE	VOLTS, PHASE	MOUNTING	LOCATION
	600A	277/480V, 3ø	SEE SHEET E-_	SEE SHEET E-1

CKT NO.	DESCRIPTION	C/B SIZE	KVA CKT	KVA Aø	KVA Bø	KVA Cø	KVA CKT	C/B SIZE	DESCRIPTION	CKT NO.
1	PCC	400/2	63				50	400/2	PCA	2
3	——	——	63				50	——	——	4
5	PCD	400/2	68				63	400/2	PCB	6
7	——	——	68				63	——	——	8
9	LIGHTING	20/1						20/1	LIGHTING	10
11	SPACE								SPACE	12

TOTAL CONNECTED LOAD = 682 KVA — TOTAL DEMAND = 272 KVA / 327 AMPS

STATE OF ALASKA 49th Mark G. Morris EE 8613 REGISTERED PROFESSIONAL ENGINEER

IHH Electrical
5636 Glacier Highway, Juneau AK 99801
907-790-8520

Date	No.	Description	By
		PRELIMINARY DESIGNS	

Designed: MGM — Approved:
Drawn: SHS — Scale: AS NOTED — Date: 02/11/02
Checked: — Project No. 012360

R&M ENGINEERING-KETCHIKAN, INC.
355 CARLANNA LAKE ROAD
KETCHIKAN, ALASKA 99901

Client: CITY OF COFFMAN COVE
P.O. BOX 18135
COFFMAN COVE, ALASKA 99918

Project: COFFMAN COVE BOAT RAMP EXPANSION

Sheet Description: SINGLE LINE DIAGRAM, PANEL SCHEDULES

Sheet No. E-2

X

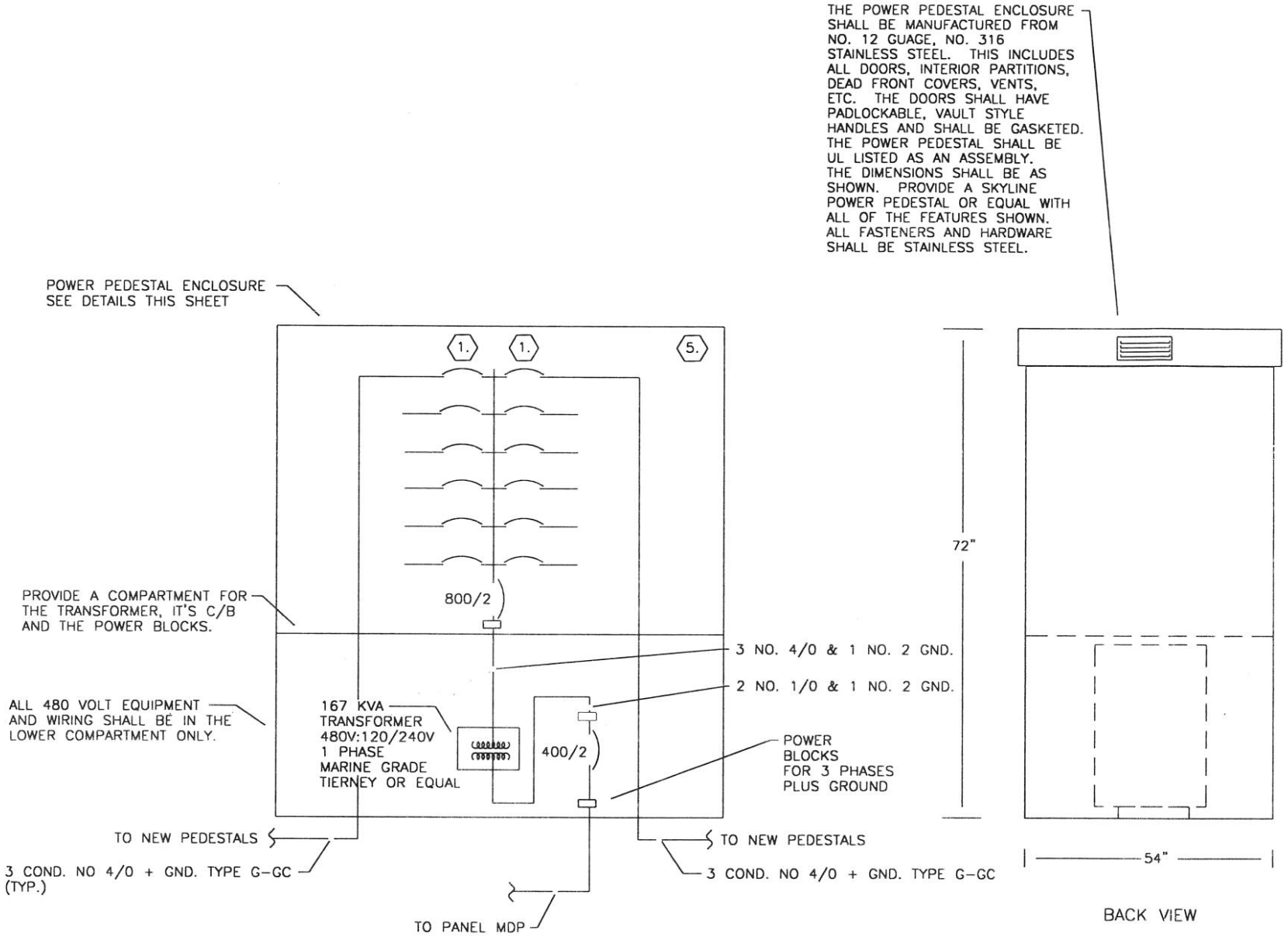

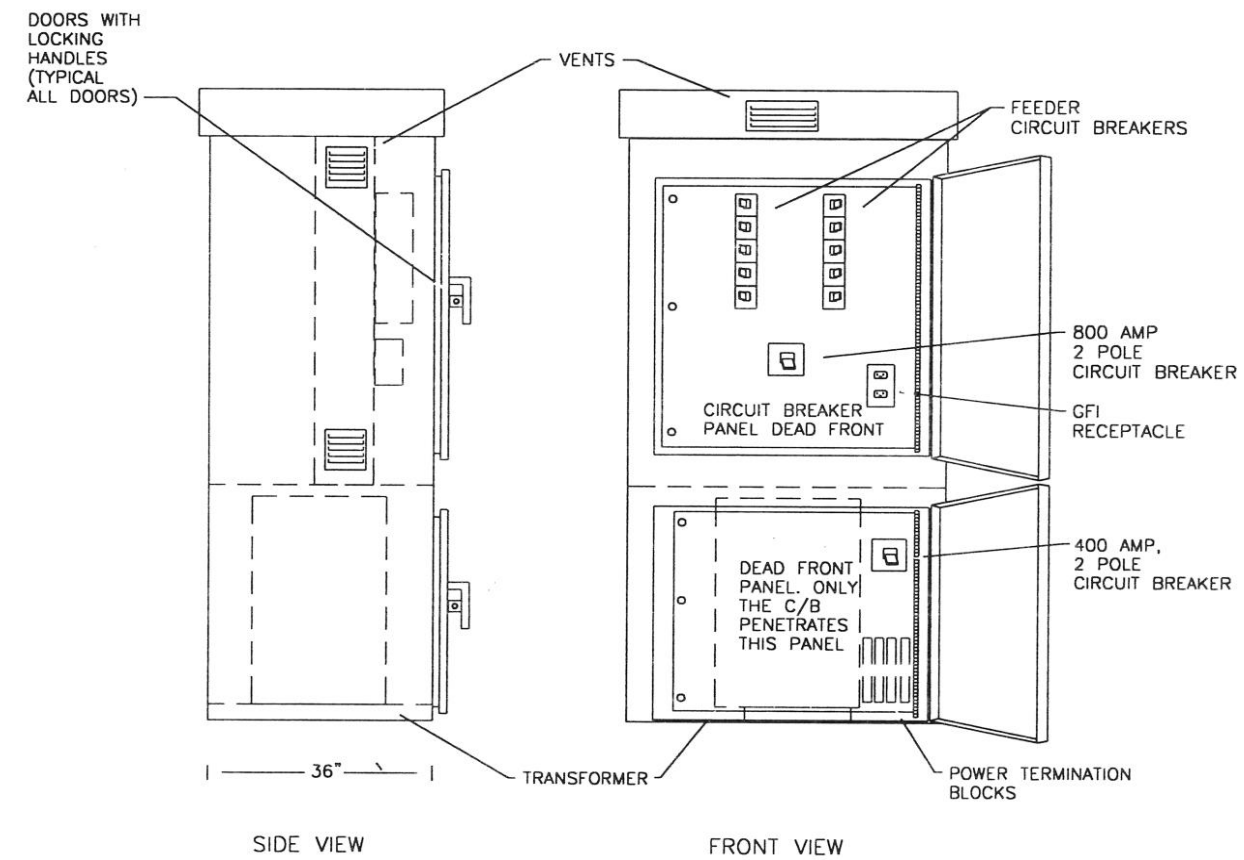

NOTES:

1. THESE CIRCUIT BREAKERS FEED THE PEDESTALS. SEE SHEET E-1.
2. BOND THE SECONDARY NEUTRAL TO THE GROUND POWER BLOCK WITH A NO. 1/0 GND. BOND THE PEDESTAL ENCLOSURE TO THE GROUND BUS WITH A NO. 1/0 GND.
3. PROVIDE A NEUTRAL BUS AND A GROUND BUS AT THE PANEL IN THE UPPER COMPARTMENT.
4. FIELD DRILL HOLES IN THE BASE OF THE PEDESTAL ENCLOSURE TO INSTALL THE CABLES. OVERSIZE THE HOLES AND INSTALL A RUBBER GROMMETT TO PROTECT THE CABLES.
5. SEE PANEL SCHEDULES FOR CIRCUIT BREAKER QUANTITES AND SIZES IN BRANCH PANEL SECTION. PROVIDE PANEL BUSS RATED AT 800 AMPS.

NEW POWER PEDESTAL – SINGLE LINE DIAGRAM

NO SCALE

NEW POWER PEDESTAL – ELEVATION DETAILS

NO SCALE

NOTES:

1. MOUNT COLOR CODED ENGRAVED PHENOLIC LABELS NEXT TO EACH CIRCUIT BREAKER. USE 1" HIGH LETTERS MIN. LABEL ALL OTHER DEVICES IN THE PEDESTAL.
2. ALL WELDS ON THE PEDESTAL SHALL BE STAINLESS. POWDER COAT THE PEDESTAL WHITE. BOLT THE INSTALL STAINLESS STEEL ANGLE SUPPORTS ALL AROUND THE BASE INSIDE THE ENCLOSURE. BOLT THE ENCLOSURE TO THE MOUNTING BRACKET (SEE SHEET S2) WITH 3/8" DIAMETER BOLTS (MIN. OF 6).

STATE OF ALASKA 49th Mark G. Morris EE 8613 REGISTERED PROFESSIONAL ENGINEER

IHH Electrical
5636 Glacier Highway, Juneau AK 99801
907-790-8520

Date	No.	Description	By
		PRELIMINARY DESIGNS	

Designed: MGM | Approved:
Drawn: SHS | Scale: AS NOTED | Date: 02/11/02
Checked: | Project No. 012360

R&M ENGINEERING-KETCHIKAN, INC.
355 CARLANNA LAKE ROAD
KETCHIKAN, ALASKA 99901

Client: CITY OF COFFMAN COVE
P.O. BOX 18135
COFFMAN COVE, ALASKA 99918

Project: COFFMAN COVE BOAT RAMP EXPANSION

Sheet Description: POWER PEDESTAL DETIAL

Sheet No. E-3

X

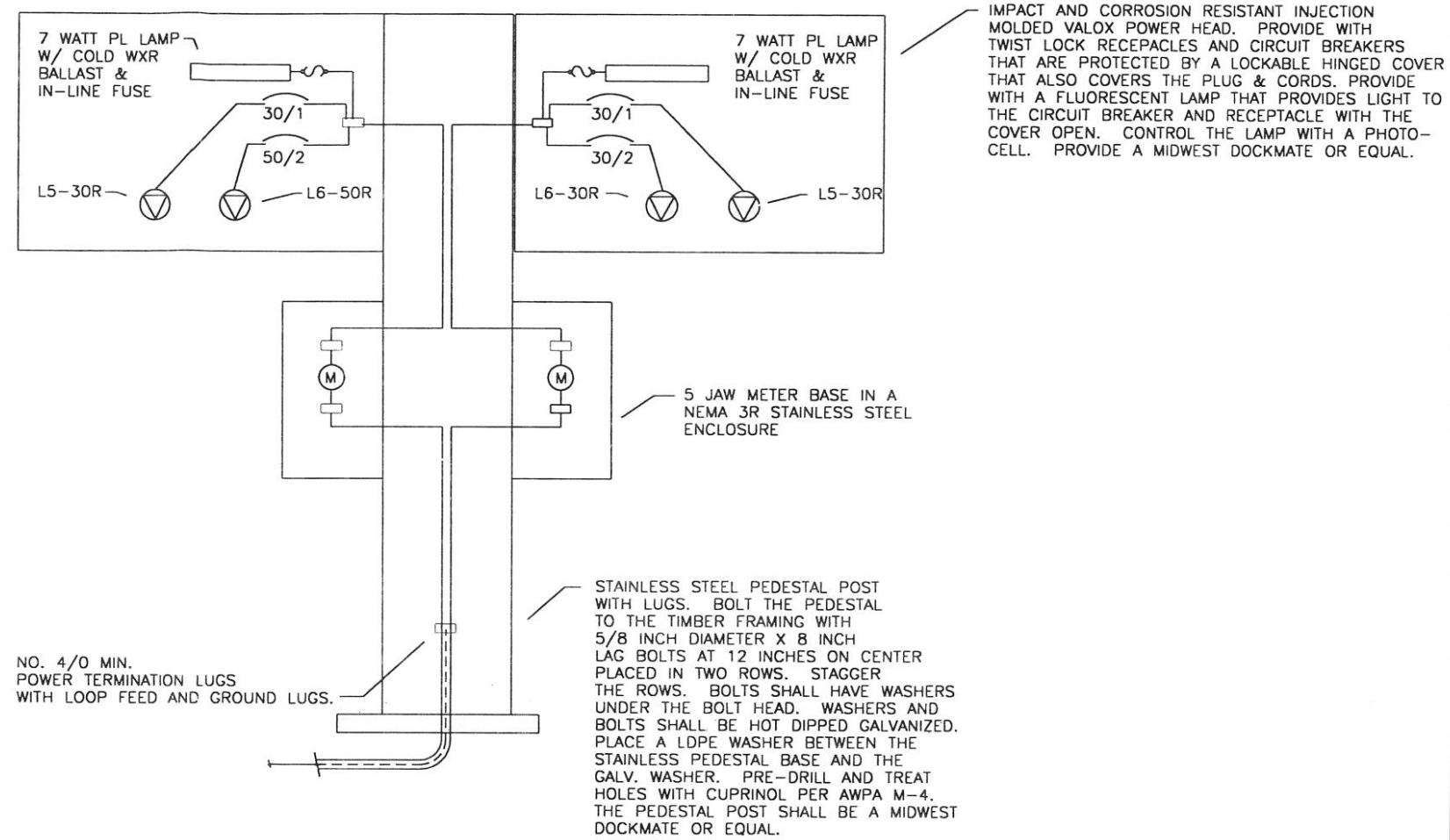

NEW TYPE C POWER PEDESTAL – SINGLE LINE DIAGRAM & DETAIL

NO SCALE

NOTES:

1. MOUNT PEDESTAL WHERE SHOWN ON THE SITE PLAN.
2. THE TYPE A POWER PEDESTAL IS IDENTICAL TO THE TYPE C POWER PEDESTAL EXCEPT FOR THE FOLLOWING CHANGES:
   1. IT HAS (1) 50/2 & (1) 30/1 C/B IN EACH POWER HEAD WITH (1) L6-50R AND (1) L5-30R RECPTACLES.
3. THE TYPE B PEDESTAL IS IDENTICAL TO THE TYPE A PEDESTAL EXCEPT IT HAS ONLY ONE POWER HEAD.

STATE OF ALASKA 49th Mark G. Morris EE 8613 REGISTERED PROFESSIONAL ENGINEER

IHH Electrical
5636 Glacier Highway, Juneau AK 99801
907-780-6520

Date	No.	Description	By
		PRELIMINARY DESIGNS	

Designed: MGM | Approved:
Drawn: SHS | Scale: AS NOTED | Date: 02/11/02
Checked: | Project No. 012360

R&M ENGINEERING-KETCHIKAN, INC.
355 CARLANNA LAKE ROAD
KETCHIKAN, ALASKA 99901

Client: CITY OF COFFMAN COVE
P.O. BOX 18135
COFFMAN COVE, ALASKA 99918

Project: COFFMAN COVE BOAT RAMP EXPANSION

Sheet Description: POWER PEDESTAL DETAILS

Sheet No. E-4

X

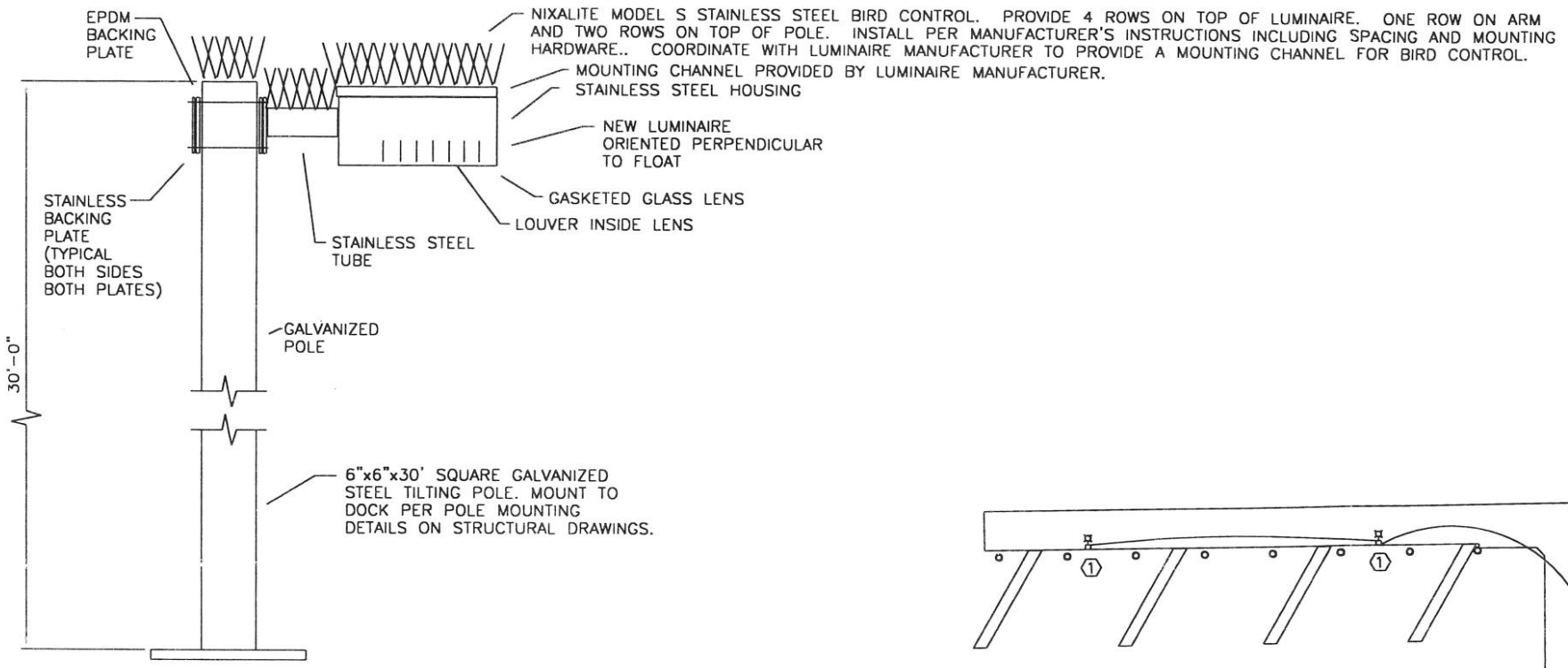

LUMINAIRE MOUNTING DETAIL

NO SCALE

GENERAL REQUIRMENTS FOR ALL POLES

1. SIZE POLES FOR SUSTAINED WINDS OF 120 MPH WITH GUST TO 150 MPH. POLE SIZES SHOWN ARE A MINIMUM.
2. PROVIDE POLE BASE PER DETAIL, THIS SHEET.
3. PROVIDE A FULL PENETRATION WELD AROUND BOTTOM OF THE BASE PLATE TO THE POLE SHAFT. WELD POLE SHAFT TO TOP OF BASE PLATE ON ALL FOUR SIDES.
4. ALL POLES SHALL BE HOT DIPPED GALVANIZED AND SHALL BE PAINTED LIGHT GREY WITH THE SYSTEM 8 PAINTING SYSTEM SPECIFIED IN SPECIFICATION SECTION 16521. THIS IS A TNEMEC SYSTEM FOR PAINTING GALVANIZED STEEL.

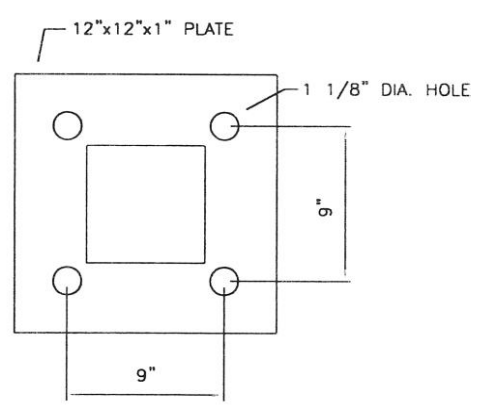

POLE BASE PLATE DETAIL

NO SCALE

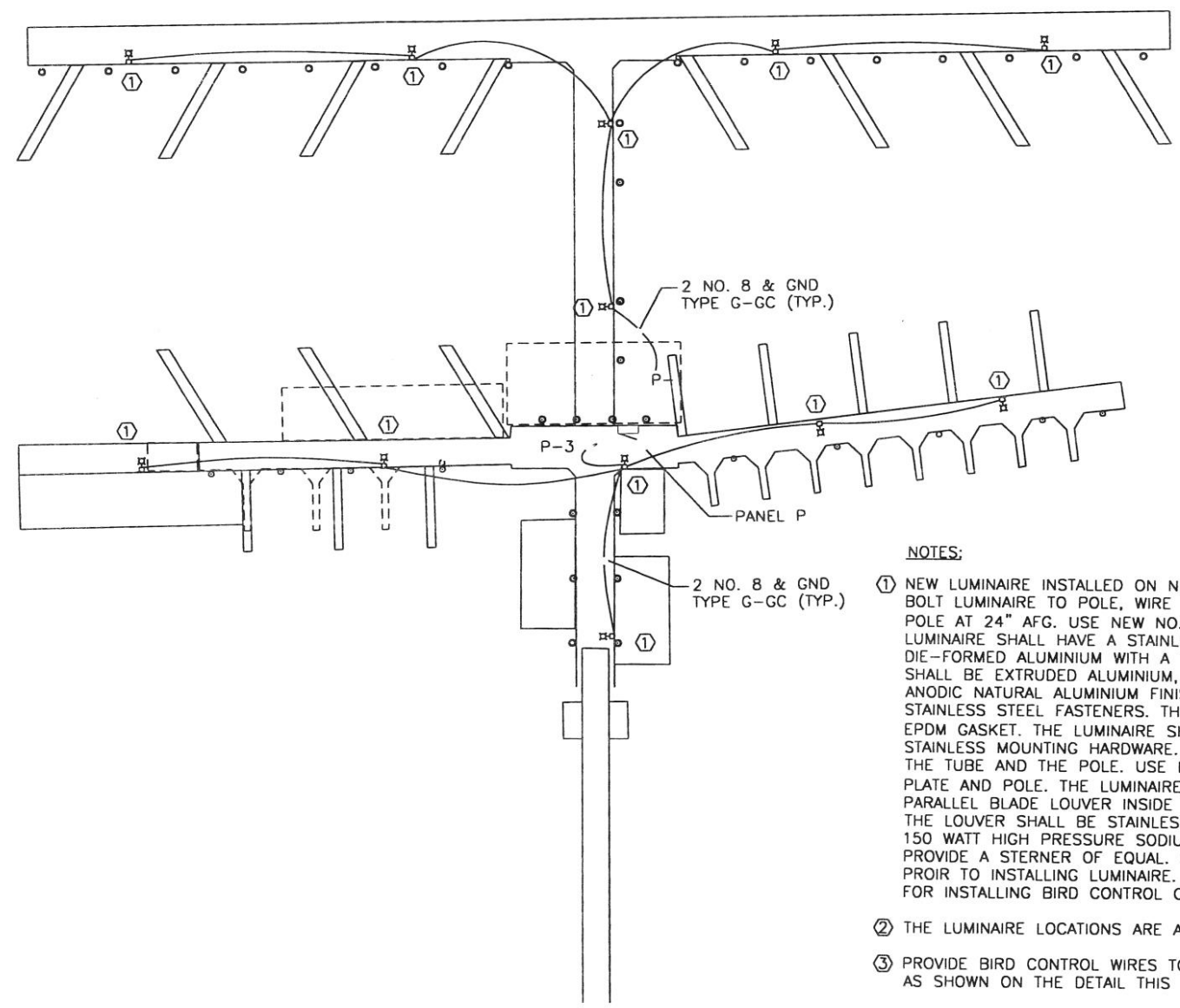

SITE PLAN – LIGHTING

5 0 30 60
Feet

NOTES:

① NEW LUMINAIRE INSTALLED ON NEW 6" GALV. POLE. DRILL MOUNTING HOLES AND BOLT LUMINAIRE TO POLE, WIRE LUMINAIRE FROM PANEL P MOUNTED TO THE POLE AT 24" AFG. USE NEW NO. 10 XHHW INSULATED CONDUCTORS. THE LUMINAIRE SHALL HAVE A STAINLESS HOUSING. THE REFLECTOR SHALL BE DIE-FORMED ALUMINIUM WITH A TYPE 1 IES DISTRIBUTION. THE DOOR FRAME SHALL BE EXTRUDED ALUMINIUM, INTERNAL CORNER KEY CONSTRUCTION WITH ANODIC NATURAL ALUMINIUM FINISH. THE DOOR SHALL BE FASTEND WITH TWO STAINLESS STEEL FASTENERS. THE LENS SHALL BE FLAT TEMPERD GLASS WITH EPDM GASKET. THE LUMINAIRE SHALL BE 2"X4"X10" STAINLESS STEEL TUBE WITH STAINLESS MOUNTING HARDWARE. PROVIDE A LDPE AND A S.S. PLATE BETWEEN THE TUBE AND THE POLE. USE LDPE PLATE BETWEEN STAINLESS STEEL BACKING PLATE AND POLE. THE LUMINAIRE SHALL HAVE 2/5" HIGHX 1" ON CENTER PARALLEL BLADE LOUVER INSIDE THE HOUSING. FINISHED TO MATCH LUMINAIRE. THE LOUVER SHALL BE STAINLESS STEEL OR ALUMINIUM. THE LAMP SHALL BE 150 WATT HIGH PRESSURE SODIUM WITH A MULTI-TAP HIGH FACTOR BALLAST. PROVIDE A STERNER OF EQUAL. ORIENT THE LUMINAIRE AS SHOWN. THE VOLTAGE PROIR TO INSTALLING LUMINAIRE. PROVIDE LUMINAIRE WITH MOUNTING CHANNEL FOR INSTALLING BIRD CONTROL ON TOP OF LUMINAIRE.

② THE LUMINAIRE LOCATIONS ARE APPROXIMATE.

③ PROVIDE BIRD CONTROL WIRES TO THE TOP OF THE LUMINAIRE, ARM AND POLE AS SHOWN ON THE DETAIL THIS SHEET.

STATE OF ALASKA 49th Mark G. Morris EE 8613 REGISTERED PROFESSIONAL ENGINEER

IHH Electrical
5636 Glacier Highway, Juneau AK 99801
907-790-8520

Date	No.	Description	By
		PRELIMINARY DESIGNS	

Designed: MGM | Approved:
Drawn: SHS | Scale: AS NOTED | Date: 02/11/02
Checked: | Project No. 012360

R&M ENGINEERING-KETCHIKAN, INC.
355 CARLANNA LAKE ROAD
KETCHIKAN, ALASKA 99901

Client: CITY OF COFFMAN COVE
P.O. BOX 18135
COFFMAN COVE, ALASKA 99918

Project: COFFMAN COVE BOAT RAMP EXPANSION

Sheet Description: SITE PLAN – LIGHTING

Sheet No. E-5

X

NOTES:

WOOD FRAMING

1.) WOOD FRAMING SHALL BE HEM-FIR NO. 1 OR DOUGLAS FIR/LARCH NO. 2 OR OTHER TO BE APPROVED BY ENGINEER. ALL GLULAM STRINGERS AND DIAPHRAGM MEMBERS SHALL BE TREATED WITH CREOSOTE TO A RETENTION BY ASSAY OF 20 pcf. GLULAM DECK PANELS SHALL BE TREATED WITH CREOSOTE TO A RETENTION BY ASSAY OF 12 pcf. ALL OTHER WOOD MEMBERS SHALL BE PRESSURE TREATED WITH WATER-BORNE PRESERVATIVES APPROVED FOR USE IN SALT WATER ENVIRONMENTS.

2.) ALL BORINGS, CUTS, AND ABRASIONS OCCURRING AFTER PRESSURE TREATMENT SHALL BE CAREFULLY TRIMMED AND BRUSH COATED WITH TWO APPLICATIONS OF A MIXTURE CONTAINING 60% CREOSOTE OIL AND 40% ROOFING PITCH OR SHALL BE BRUSH-COATED WITH AT LEAST THREE APPLICATIONS OF HOT CREOSOTE OIL (150°F - 200°F) AND COVERED WITH HOT ROOFING PITCH. IF WATER-BORNE PRESERVATIVE IS THE BASE TREATMENT, THREE APPLICATIONS OF A SOLUTION OF COPPER NAPHTHENATE CONTAINING NOT LESS THAN 2% COPPER MAY BE USED.

STEEL COMPONENTS

1.) STEEL SHAPES, PLATES, AND FABRICATIONS SHALL BE A36 STEEL, HOT-DIPPED GALVANIZED AFTER FABRICATION IN ACCORDANCE WITH ASTM A123/AAHTO M111 OR ASTM A153/AASHTO M232.

2.) NUTS AND BOLTS SHALL BE GRADE A307 HOT-DIPPED GALVANIZED IN ACCORDANCE WITH ASTM A123/AASHTO M111 OR ASTM A153/AASHTO M232. ALL BOLTS SHALL HAVE ECONOMY HEADS. ALL NUTS SHALL BEAR AGAINST WASHERS AND/OR BEARING PLATES AS SHOWN IN DRAWINGS. NUTS SHALL NOT BEAR DIRECTLY AGAINST WOOD MEMBERS.

FLOTATION MATERIAL

1.) FLOTATION BILLETS SHALL BE POLYSTYRENE COATED TO A MINIMUM 50 mil THICKNESS WITH AN APPROVED 100% SOLIDS POLYURETHANE. COATING SHALL BE ABLE TO WITHSTAND THE EFFECTS OF UNTRAVIOLET EXPOSURE. SHOP DRAWING SUBMITTALS SHALL INCLUDE A SAMPLE OF THE BILLET MATERIAL TO BE USED COATED WITH THE COATING PROPOSED TO BE USED (MINIMUM SAMPLE SIZE - 6 INCH x 6 INCH x 4 INCH). THE COATING MUST ADHERE TO THE POLYSTYRENE WITHOUT DAMAGING IT. FIELD DAMAGED COATING SHALL BE REPAIRED WITH A FIELD APPLICABLE TWO COMPONENT URETHANE MASTIC MANUFACTURED BY THE COATING SUPPLIER. FIELD REPAIR TO BE APPROVED BY THE ENGINEER. FLOTATION BILLETS SHALL MEET CORPS OF ENGINEERS REGULATION #36 CFR PART 327.

PILES

1.) PILES SHALL BE DRIVEN MINIMUM OF 15' FEET INTO BEARING SOILS. STEEL PIPE SHALL BE DIAMETERS AND WALL THICKNESS SHOWN ON PLANS AND SHALL BE GALVANIZED ASTM A53 UNLESS OTHERWISE SPECIFIED.

LEGEND:

EXISTING	DESCRIPTION	PROPOSED
"APARK-2"	CONTROL POINT, R & M	
15+00	CONTROL ALIGNMENT CENTERLINE	
	PROPERTY LINE	
	RIGHT-OF-WAY	
	EASEMENT BOUNDARY	
	UTILITY POLE	
	UTILITY POLE GUY ANCHOR	
	STREETLIGHT	
	FIRE HYDRANT	
W	WATER MAIN	
	WATER MAIN GATE VALVE	
	WATER MAIN TEE	
	WATER SERVICE LINE	
	REDUCER	
	WATER MAIN BEND	11-1/4° BEND
S	SEWER MAIN	
	SEWER SERVICE-GRAVITY	
	EXISTING STRUCTURES	
	NEW STRUCTURES	
	PILES	
	CENTERLINE	
	TEST PILE LOCATION	

EXISTING	DESCRIPTION	PROPOSED
	SANITARY SEWER MANHOLE	
	STORM DRAIN	
	STORM DRAIN CATCH BASIN	
	CMP CULVERT	
	FENCE	
	PAVED STREET OR DRIVEWAY	
	BUILDING	
	ELEC. TRANSFORMER	
95	CONTOUR LINES	95
	STACKED ROCK WALL	
	CULVERT(PROFILE)	
	SEWER CLEANOUT(PROFILE)	
	AIR RELEASE VALVE(PROFILE)	
	SEWER LINE(PROFILE)	
	WATER LINE(PROFILE)	
	SS MANHOLE(PROFILE)	

Date	No.	Description	By
		DOCK DESIGN	

Designed: TSS | Approved: SAM
Drawn: TSS | Scale: AS NOTED | Date: 1/27/03
Checked: SAM | Project No. 012360

R&M ENGINEERING-KETCHIKAN, INC.
355 CARLANNA LAKE ROAD
KETCHIKAN, ALASKA 99901

Client: CITY OF COFFMAN COVE
P.O. BOX 18135
COFFMAN COVE, ALASKA 99918

Project: COFFMAN COVE HARBOR EXPANSION

Sheet Description: GENERAL NOTES

Sheet No. T2