DOMESTIC VIOLENCE SHELTER

TUNDRA WOMEN'S COALITION

P.O. BOX 2029
250 6th AVENUE
BETHEL, ALASKA 99559

100% CONSTRUCTION DOCUMENTS
APRIL 21, 2009

SHEET INDEX

PROJECT INFORMATION

T1 COVER SHEET

CIVIL

C0.1 SURVEY CONTROL PLAN
C1.0 DEMOLITION PLAN
C2.0 SITE PLAN
C3.0 GRADING PLAN
C4.0 SITE SECTION
C5.0 DETAILS
C5.1 FENCE DETAILS
C6.1 UTILITY DETAILS

STRUCTURAL

S0.0 GENERAL NOTES
S1.0 PILE/FOUNDATION PLAN
S2.0 MAIN FLOOR GIRDER FRAMING PLAN
S3.0 MAIN FLOOR JOIST FRAMING PLAN
S4.0 PILE DETAILS
S4.1 PILE CAP DETAILS
S4.2 MAIN FLOOR FRAMING DETAILS
S4.3 MAIN FLOOR FRAMING DETAILS
S4.4 MAIN FFLOOR FRAMING DETAILS
S5.0 ROOF FRAMING PLAN
S6.0 SHEAR WALL / BEARING WALL PLAN
S7.0 ROOF FRAMING DETAILS
S7.1 ROOF FRAMING DETAILS
S7.2 MANUFACTURED TRUSS DIAGRAMS
S7.3 TIMBER TRUSS DETAILS

ARCHITECTURAL

A1.1 FIRE CODE ANALYSIS
A2.1 OVERALL FLOOR PLAN
A2.2 ENLARGED FLOOR PLAN – AREA A
A2.3 ENLARGED FLOOR PLAN – AREA B
A2.4 ROOF PLAN
A2.5 DOOR TYPES, DOOR & RELITE SCHEDULE
A2.6 ROOM FINISH SCHEDULE
A2.7 WALL TYPES
A3.1 EXTERIOR ELEVATIONS – SOUTH & WEST
A3.2 EXTERIOR ELEVATIONS – NORTH & EAST
A3.3 BUILDING SECTIONS
A3.4 BUILDING SECTIONS & DETAILS
A3.5 WALL SECTIONS
A4.1 ENLARGED FLOOR PLANS & INTERIOR ELEVATIONS
A4.2 INTERIOR ELEVATIONS
A4.3 INTERIOR ELEVATIONS
A4.4 ENLARGED FLOOR PLANS & INTERIOR ELEVATIONS
A4.5 NTERIOR ELEVATIONS

ARCHITECTURAL – CONT'D

A6.1 REFLECTED CEILING PLAN
A6.2 CRAWLSPACE & UNDERFLOOR UTILIDOR PLAN
A6.3 CEILING DETAILS
A7.1 ENLARGED STAIR PLANS AND SECTIONS
A7.2 ENLARGED STAIR AND RAMP – PLANS AND SECTIONS
A8.1 WINDOW TYPES & WINDOW DETAILS
A8.2 EXTERIOR AND INTERIOR DETAILS
A8.3 ROOFING DETAILS
A8.4 INTERIOR DETAILS
A8.5 INTERIOR DETAILS
A8.6 UNDERFLOOR SECURITY FENCE PLAN & DETAILS
A8.7 EXTERIOR DETAILS
A9.1 EQUIPMENT, FURNISHINGS & SPECIALTIES PLAN
A9.2 ENLARGED FLOOR PLANS – EQUIPMENT, FURNISHINGS & SPECIALTIES
A9.3 EQUIPMENT, FURNISHINGS, CASEWORK SCHEDULE, & DETAILS

MECHANICAL

M1.1 MECHANICAL SCHEDULES, ABBREVIATIONS & LEGEND
M1.2 MECHANICAL SCHEDULES
M2.1 UNDER FLOOR PIPING PLAN
M2.2 ABOVE FLOOR PIPING PLAN
M2.3 ABOVE FLOOR PIPING PLAN
M2.4 PLUMBING DETAILS
M2.5 PLUMBING DETAILS & SCHEMATICS
M3.1 HEATING PLAN
M3.2 HEATING DETAILS
M3.3 HEATING DETAILS
M4.1 VENTILATION PLAN
M5.1 MECHANICAL ROOM PLAN & DETAILS

ELECTRICAL

E0.1 LEGEND AND SCHEDULES
E1.1 SITE PLAN
E2.1 LIGHTING PLAN
E3.1 POWER PLAN
E3.2 ENLARGED POWER PLANS
E4.1 SYSTEMS PLAN
E5.1 RISER DIAGRAMS
E5.2 PANEL SCHEDULES
E5.3 PANEL SCHEDULES
E6.1 DETAILS
E6.2 DETAILS
E6.3 DETAILS
E6.4 DETAILS

PROJECT LOCATION

USKH
Architecture • Engineering
Land Surveying• Planning

2515 'A' Street
Anchorage, Alaska 99503
(907) 276-4245

544 4th Avenue, Suite 102
Fairbanks, Alaska 99701
(907) 452-2128

3031 Clinton Drive
Suite 200
Juneau, Alaska 99801
(907) 790-2901

351 W Parks Hwy, Suite 200
Wasilla, Alaska 99654
(907) 376-7815

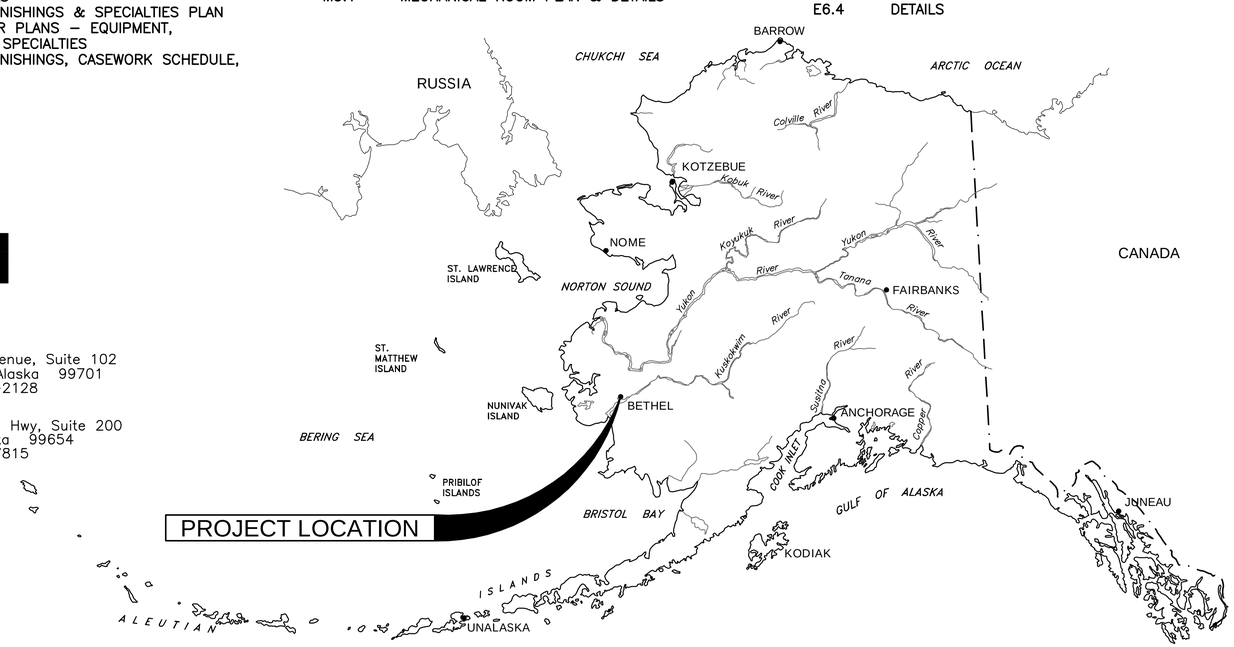

USER: JLINTELMAN FILE: I:\1074400\DWGS\1074400_T-1-100%.DWG PLOT DATE: 4/21/2009 12:08 PM

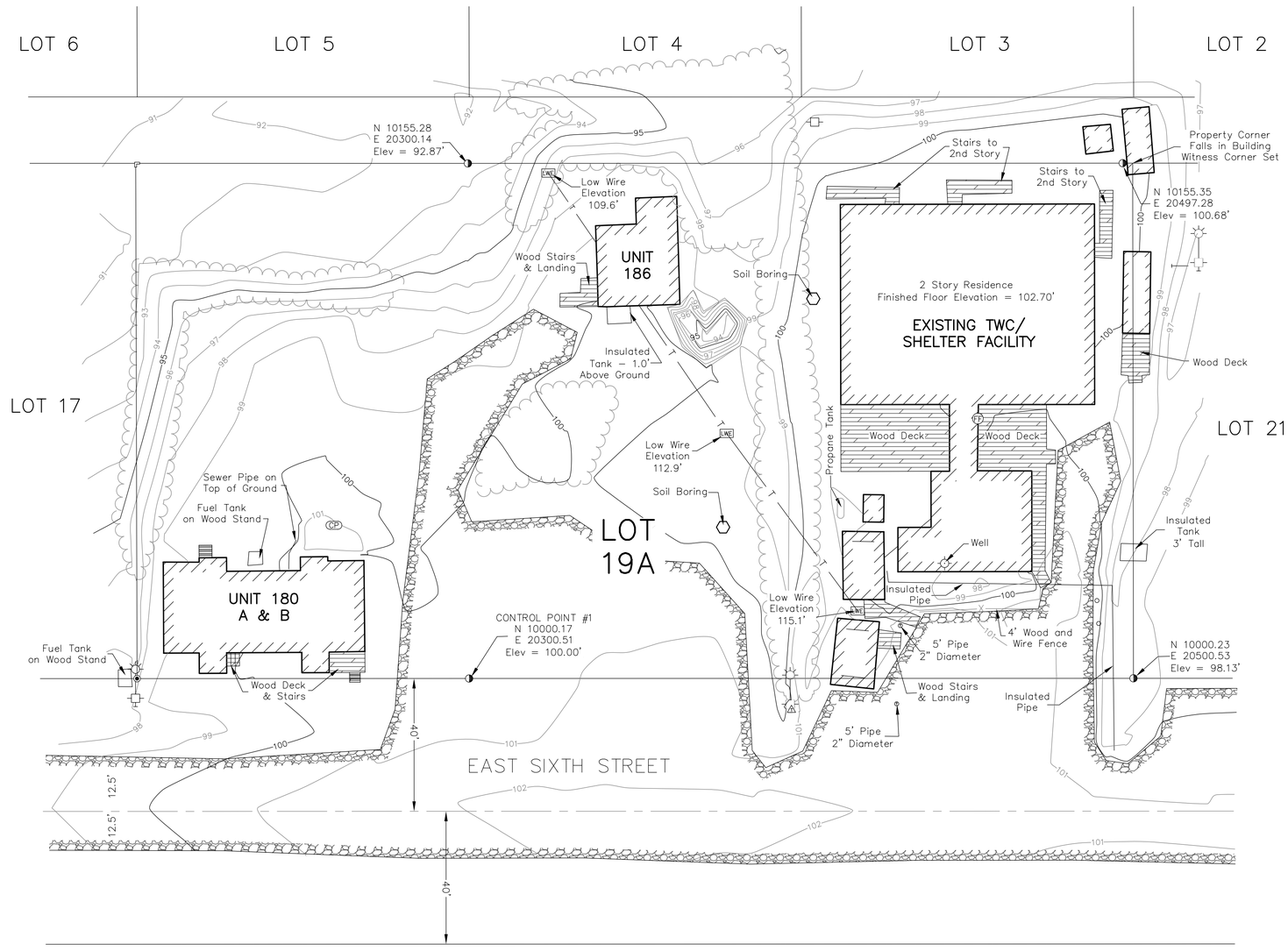

GRAPHIC SCALE

20 0 10 20 40 80

(IN FEET)
1 inch = 20 ft.

SURVEY LEGEND

- Found 1" Angle Iron Bent
- Set 5/8" Rebar
- Post
- Power Pole with Luminare
- Low Overhead Utility Wire
- Power Pole
- Found 2" Aluminum Cap
- Guy Wire
- Miscellaneous Topo Item
- Finish Floor Elevation Location
- Telephone Pedestal
- Septic Clean Out
- Overhead Telephone
- Building
- Edge of Gravel
- Edge of Vegetation
- Contour Interval = 1.0'

NOTES

1. FOUND LOT CORNERS FROM PREVIOUS LOT SURVEY.

HORIZONTAL CONTROL

BASED ON A LOCAL GROUND COORDINATE SYSTEM DEVELOPED BY USKH, INC.

VERTICAL CONTROL

ELEVATIONS ARE BASED UPON CONTROL POINT #1 AS SHOWN HEREON HAVING AN ASSUMED ELEVATION OF 100.00 FEET.

1 / C0.1 SURVEY CONTROL PLAN

SCALE: 1"=20'

STATE OF ALASKA 49TH
Jacob Michael Gerondale
LS-11758
REGISTERED PROFESSIONAL LAND SURVEYOR

Date Stamped: 04/15/2009

Date	Revision	By

USKH
Architecture • Engineering
Land Surveying • Planning

2515 'A' Street
Anchorage, Alaska 99503
(907) 276-4245

544 4th Avenue, Suite 102
Fairbanks, Alaska 99701
(907) 452-2128

3031 Clinton Drive
Suite 200
Juneau, Alaska 99801
(907) 790-2901

351 W Parks Hwy, Suite 200
Wasilla, Alaska 99654
(907) 376-7815

Project:
DOMESTIC VIOLENCE SHELTER

TUNDRA WOMEN'S COALITION
P.O. BOX 2029
250 6th AVENUE
BETHEL, ALASKA 99559

Project Mgr.	JC	
Drawn	GIS	
Checked	SDG	ZWS
Date	15 APRIL 2009	

Sheet Contents:
SURVEY CONTROL PLAN

Sheet No.:
C0.1

USKH W.O. 1074400

DRAWING NAME: I:\1074400\Dwgs\c\Sheets\1074400C01.dwg PLOTTED: Apr 15, 2009 - 10:54am

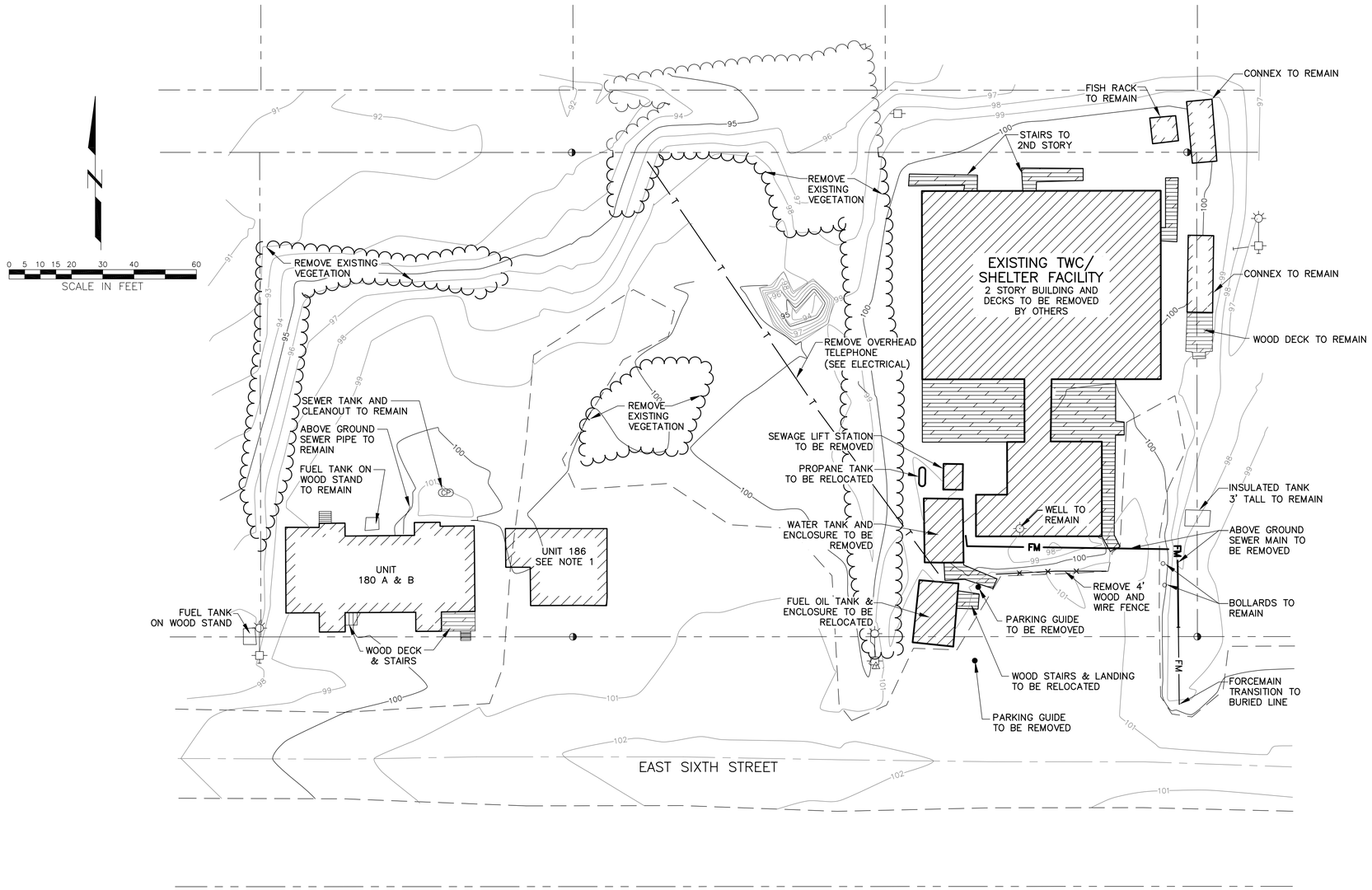

1 / C1.0 DEMOLITION PLAN

NOTES:

1. UNIT 186 WAS TO BE RELOCATED AFTER COMPLETION OF FIELD SURVEY. POSITION SHOWN MAY NOT BE ACCURATE.
2. REMOVALS AND RELOCATIONS SHALL BE COORDINATED WITH OWNER. USE OF EXISTING TWC/SHELTER AND SUPPORT FACILITIES SHALL BE MAINTAINED UNTIL OCCUPANCY OF NEW FACILITY. PROVIDE TEMPORARY UTILITIES, CONNECTIONS, AND ACCESS AS REQUIRED.

STATE OF ALASKA 49TH
Zane W. Shanklin
CE 7056
REGISTERED PROFESSIONAL ENGINEER

Date Stamped: 04/15/2009

Date	Revision	By

USKH
Architecture • Engineering
Land Surveying • Planning

2515 'A' Street
Anchorage, Alaska 99503
(907) 276-4245

544 4th Avenue, Suite 102
Fairbanks, Alaska 99701
(907) 452-2128

3031 Clinton Drive
Suite 200
Juneau, Alaska 99801
(907) 790-2901

351 W Parks Hwy, Suite 200
Wasilla, Alaska 99654
(907) 376-7815

Project:
DOMESTIC VIOLENCE SHELTER

TUNDRA WOMEN'S COALITION
P.O. BOX 2029
250 6th AVENUE
BETHEL, ALASKA 99559

Project Mgr.	JC	
Drawn	GIS	
Checked	SDG	ZWS
Date	15 APRIL 2009	

Sheet Contents:
DEMOLITION PLAN

Sheet No.:
C1.0

USKH W.O. 1074400

DRAWING NAME: I:\1074400\Dwgs\c\Sheets\1074400C10.dwg PLOTTED: Apr 15, 2009 – 10:54am

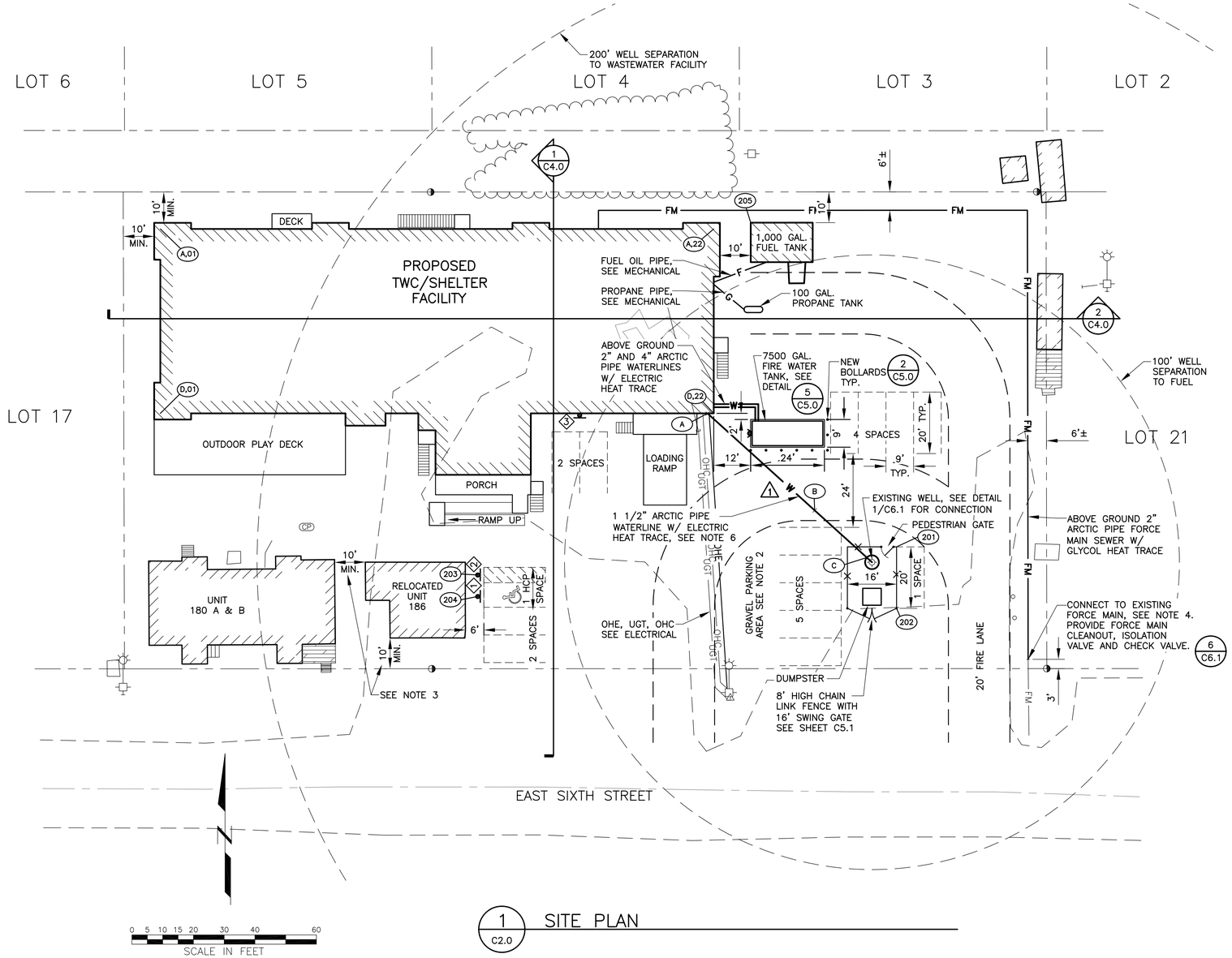

1 C2.0 SITE PLAN

COORDINATES

POINT	NORTHING	EASTING	REMARKS
A,01	10143.26	20212.20	BUILDING GRID INTERSECTION A,01
A,22	10143.26	20392.20	BUILDING GRID INTERSECTION A,22
D,01	10083.26	20212.20	BUILDING GRID INTERSECTION D,01
D,22	10083.26	20392.20	BUILDING GRID INTERSECTION D,22
201	10039.83	20451.66	FENCE CORNER
202	10019.83	20451.66	FENCE CORNER
203	10030.68	20315.43	NO PARKING SIGN
204	10023.68	20315.43	RESERVED PARKING W/ HCP SIGN
205	10145.32	20404.23	CORNER OF FUEL TANK

LEGEND:

PROPOSED	EXISTING	
		POST
		POWER POLE WITH LUMINAIRE
		POWER POLE
		FOUND 2" ALUMINUM CAP
		GUY WIRE
		MISCELLANEOUS TOPO ITEM
		TELEPHONE PEDESTAL
	CP	SEPTIC CLEAN OUT
	T	OVERHEAD TELEPHONE
OHE		OVERHEAD ELECTRIC
UGE		UNDERGROUND ELECTRIC
W		WATER MAIN
FM	FM	FORCE MAIN SEWER
G		PROPANE LINE
F		FUEL OIL LINE
		BUILDING
		EDGE OF GRAVEL
		EDGE OF VEGETATION
100	99	GROUND CONTOUR

NOTES:

1. UNDERGROUND UTILITIES NOT SHOWN MAY BE PRESENT ON SITE. OBTAIN UTILITY LOCATES AND VERIFY LOCATIONS PRIOR TO EXCAVATION.
2. FIRE LANE AND PARKING SPACES SHOWN TO ILLUSTRATE AVAILABILITY OF REQUIRED SPACES. MARKINGS ARE NOT REQUIRED.
3. DIMENSIONS TO BE VERIFIED.
4. ABOVE GROUND SEWER FORCE MAIN LOCATION IS APPROXIMATE. ROUTE FORCE MAIN WITHIN 6' OF THE PROPERTY LINE, AND BAND TO 4 X 6 SLEEPERS SPACED 10' ON CENTER. PORTIONS OF ROUTING MAY BE TEMPORARY BECAUSE OF EXISTING FEATURES. EXISTING LINE SIZE ASSUMED TO BE 2", CONTRACTOR TO VERIFY. (1)
5. FOR FENCE UNDER BUILDING SEE SHEET A8.6
6. WATER PIPE (DETAIL 3/C6.1) TO BE BURIED IN FIRE LANE WITH A 12" MIN. COVER. (1)

WATER LINE

POINT	NORTHING	EASTING	TOP OF PIPE ELEVATION	REMARKS
A	10083.26	20390.16	101.06	AT BUILDING
B	10051.69	20425.04	101.30	AT GRADE BREAK
C	--	--	104.3±	AT WELL

(1)

SIGN SUMMARY

No.	DESCRIPTION	CODE	SIZE	COLOR LEGEND	COLOR BACKGROUND	NOTES
1	RESERVED PARKING (W/ HANDICAP SYMBOL)	R7-8	12"x18"	GREEN	WHITE\BLUE	SEE DETAIL 1/C5.0
2	NO PARKING	R8-3	18x24"	RED	WHITE	
3	AUTHORIZED VEHICLES ONLY	N/A	30"x42"	WHITE	RED	POST ON BUILDING SEE DETAIL 4/C5.0

NOTE: ALL SIGNS SHALL CONFORM TO THE MANUAL ON UNIFORM TRAFFIC CONTROL DEVICES (MUTED) 2003.

STATE OF ALASKA 49TH
Zane W. Shanklin
CE 7056
REGISTERED PROFESSIONAL ENGINEER

Date Stamped: 04/15/2009

Date	Revision	By
4/21/09	WATER LINE REROUTE	SDG

USKH
Architecture • Engineering
Land Surveying • Planning
2515 'A' Street
Anchorage, Alaska 99503
(907) 276-4245
544 4th Avenue, Suite 102
Fairbanks, Alaska 99701
(907) 452-2128
3031 Clinton Drive
Suite 200
Juneau, Alaska 99801
(907) 790-2901
351 W Parks Hwy, Suite 200
Wasilla, Alaska 99654
(907) 376-7815

Project:
DOMESTIC VIOLENCE SHELTER

TUNDRA WOMEN'S COALITION
P.O. BOX 2029
250 6th AVENUE
BETHEL, ALASKA 99559

Project Mgr.	JC	
Drawn	GIS	
Checked	SDG	ZWS
Date	21 APRIL 2009	

Sheet Contents:
SITE PLAN

Sheet No.:
C2.0

USKH W.O. 1074400

DRAWING NAME: I:\1074400\Dwgs\c\Sheets\1074400C20.dwg PLOTTED: Apr 21, 2009 - 9:07am

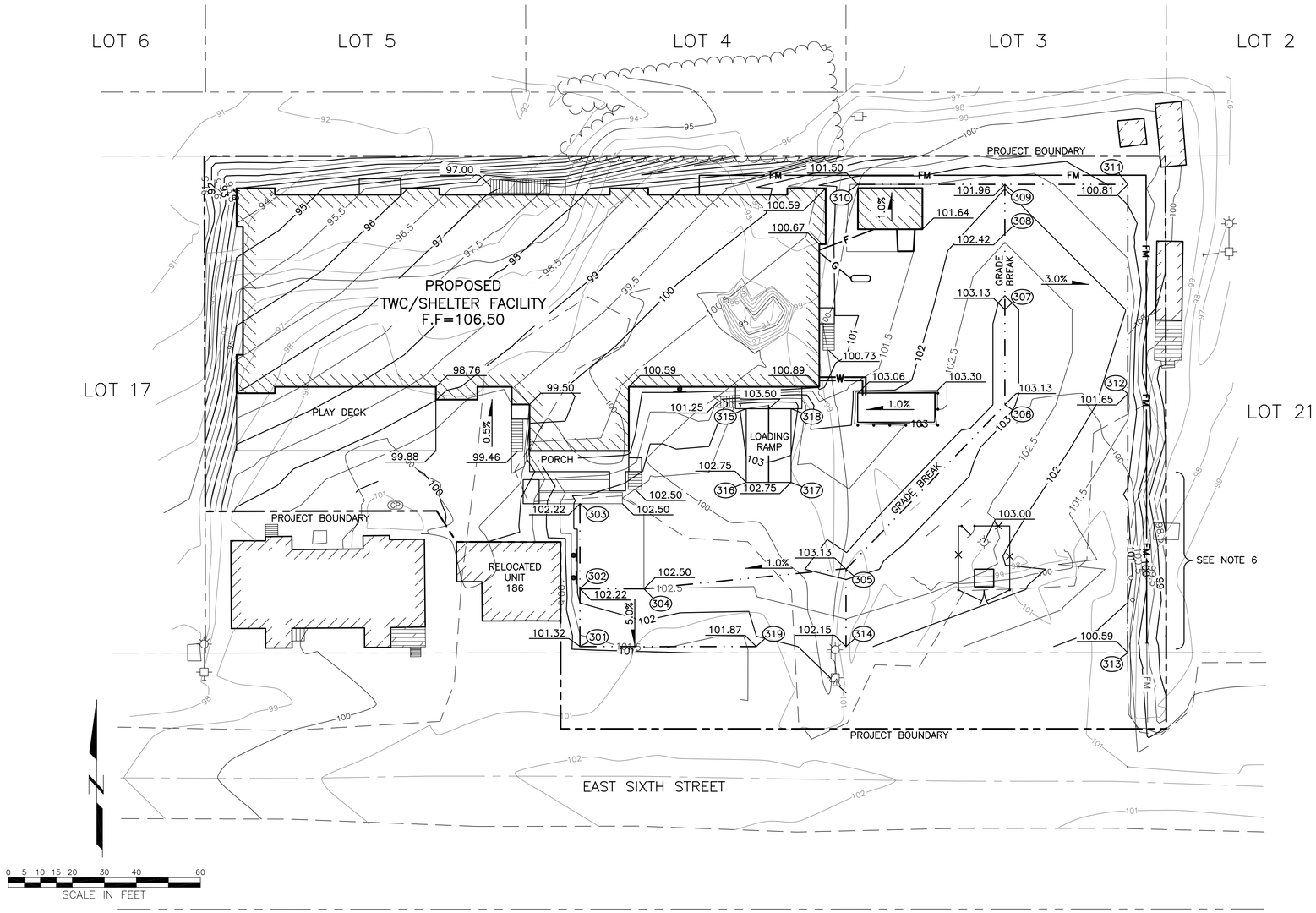

1 C3.0 GRADING PLAN

COORDINATES			
POINT	NORTHING	EASTING	REMARKS
301	10002.21	20317.43	GRADE BREAK
302	10020.21	20317.40	GRADE BREAK
303	10046.79	20317.43	GRADE BREAK
304	10020.21	20337.40	GRADE BREAK
305	10026.32	20400.53	GRADE BREAK
306	10077.65	20450.14	GRADE BREAK
307	10107.40	20450.14	GRADE BREAK
308	10131.10	20450.14	GRADE BREAK
309	10146.47	20450.14	GRADE BREAK
310	10145.32	20404.23	GRADE BREAK
311	10146.47	20488.52	GRADE BREAK
312	1006		
		-3.36	GRADE BREAK
319	10002.21	20372.49	GRADE BREAK

NOTES:

1. WITHIN BUILDING LIMITS GRADE TO MAINTAIN DRAINAGE AND MINIMUM CLEARANCE BELOW FINISH FLOOR PER STRUCTURAL. SLOPES FROM EDGE OF BUILDING TO PROPERTY LINE NOT TO EXCEED 2:1.
2. FOR STAIRS SEE ARCHITECTURAL. FIRST 4 FEET IN TRAVEL DIRECTION FROM STAIR NOT TO EXCEED 2%.
3. SLOPE NOT TO EXCEED 3:1 ALONG EAST PROPERTY LINE.
4. FINISH GRADE TO SLOPE AWAY FROM WELL AT 5% MINIMUM FOR AT LEAST 10 FEET IN ALL DIRECTIONS.
5. BETWEEN FIRE ACCESS LANES PROVIDE SMOOTH TRANSITION TO EXISTING ROAD.
6. MAINTAIN EXISTING DRAINAGE SWALE.

STATE OF ALASKA 49TH
Zane W. Shanklin
CE 7056
REGISTERED PROFESSIONAL ENGINEER

Date Stamped: 04/15/2009

Date	Revision	By

USKH
Architecture • Engineering
Land Surveying • Planning

2515 'A' Street
Anchorage, Alaska 99503
(907) 276-4245

544 4th Avenue, Suite 102
Fairbanks, Alaska 99701
(907) 452-2128

3031 Clinton Drive
Suite 200
Juneau, Alaska 99801
(907) 790-2901

351 W Parks Hwy, Suite 200
Wasilla, Alaska 99654
(907) 376-7815

Project:
DOMESTIC VIOLENCE SHELTER

TUNDRA WOMEN'S COALITION
P.O. BOX 2029
250 6th AVENUE
BETHEL, ALASKA 99559

Project Mgr.	JC	
Drawn	GIS	
Checked	SDG	ZWS
Date	15 APRIL 2009	

Sheet Contents:
GRADING PLAN

Sheet No.:
C3.0

USKH W.O. 1074400

DRAWING NAME: I:\1074400\Dwgs\c\Sheets\1074400C30.dwg PLOTTED: Apr 15, 2009 - 10:54am

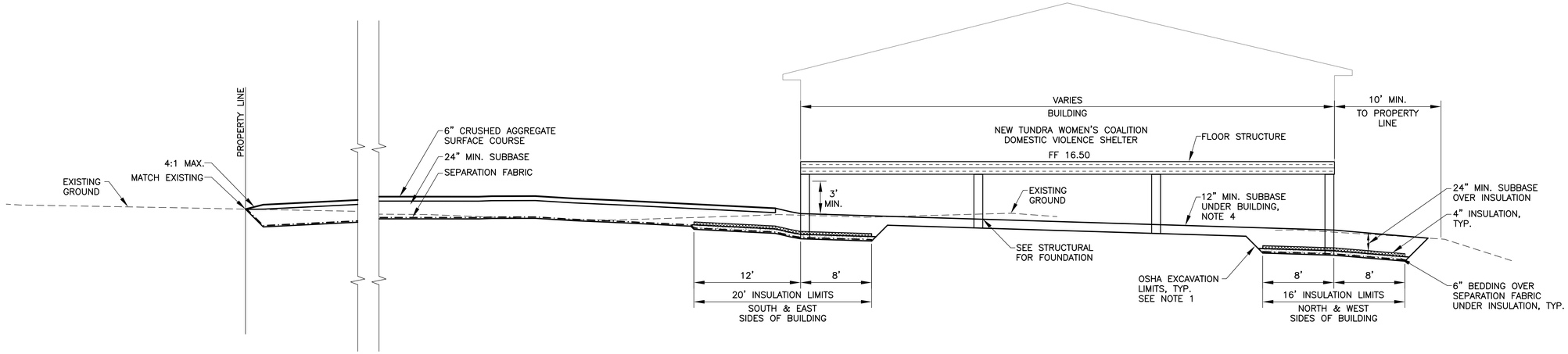

NOTES:

1. EXCAVATION SLOPES WILL VARY WITH SOIL STRENGTH AND CHARACTERISTICS. SLOPES SHALL CONFORM TO OSHA SAFETY STANDARDS.
2. AFTER EXCAVATION TO PLANNED DEPTH, SUBGRADE SHALL BE INSPECTED AND COMPACTED TO 95% MAXIMUM DENSITY. MATERIAL THAT CANNOT BE RE-COMPACTED SHALL BE OVER-EXCAVATED AND REPLACED WITH SUBBASE. DEPTH OF OVER-EXCAVATION WILL BE DETERMINED BY THE ENGINEER.
3. ALL SLOPES AND DISTURBED AREAS NOT SCHEDULED FOR SURFACING SHALL BE RE-GRADED AND PROVIDED WITH 4" TOPSOIL AND SEED.
4. EXCAVATE / FILL BENEATH BUILDING AS REQUIRED TO PROVIDE POSITIVE DRAINAGE.

1 / C4.0 BUILDING SECTION S-N

SCALE: N.T.S.

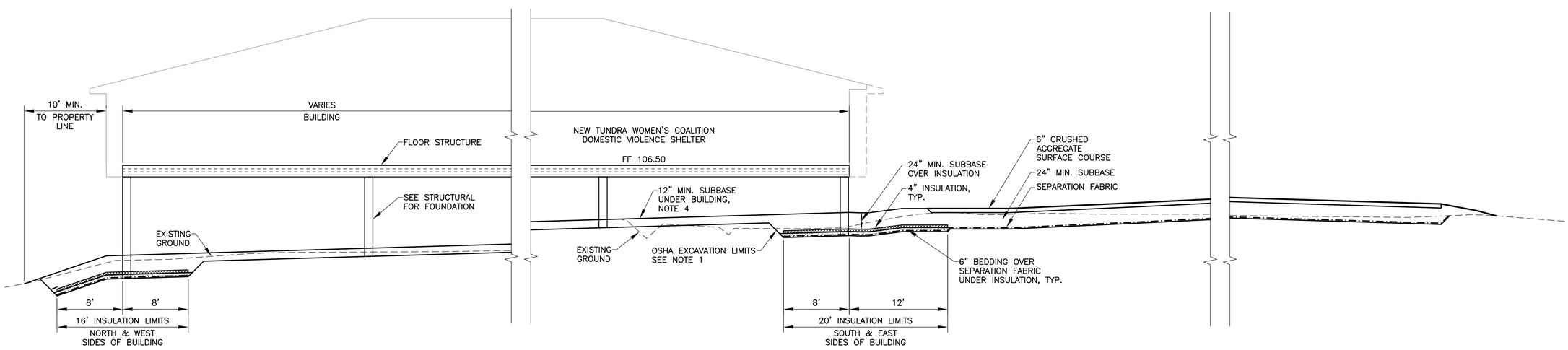

2 / C4.0 BUILDING SECTION W-E

SCALE: N.T.S.

STATE OF ALASKA 49TH
Zane W. Shanklin
CE 7056
REGISTERED PROFESSIONAL ENGINEER

Date Stamped: 04/15/2009

Date	Revision	By

USKH
Architecture • Engineering
Land Surveying • Planning

2515 'A' Street
Anchorage, Alaska 99503
(907) 276-4245

544 4th Avenue, Suite 102
Fairbanks, Alaska 99701
(907) 452-2128

3031 Clinton Drive
Suite 200
Juneau, Alaska 99801
(907) 790-2901

351 W Parks Hwy, Suite 200
Wasilla, Alaska 99654
(907) 376-7815

Project:

DOMESTIC VIOLENCE SHELTER

TUNDRA WOMEN'S COALITION
P.O. BOX 2029
250 6th AVENUE
BETHEL, ALASKA 99559

Project Mgr.	JC	
Drawn	BCL	
Checked	SDG	ZWS
Date	15 APRIL 2009	

Sheet Contents:
SITE SECTION

Sheet No.:
C4.0

USKH W.O. 1074400

DRAWING NAME: I:\1074400\Dwgs\c\Sheets\1074400C40.dwg PLOTTED: Apr 15, 2009 - 10:55am

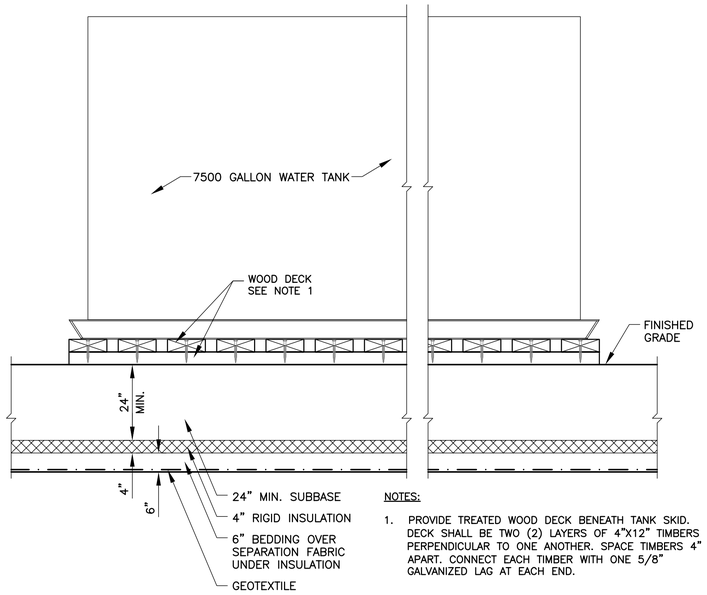

NOTES:

1. PROVIDE TREATED WOOD DECK BENEATH TANK SKID. DECK SHALL BE TWO (2) LAYERS OF 4"X12" TIMBERS PERPENDICULAR TO ONE ANOTHER. SPACE TIMBERS 4" APART. CONNECT EACH TIMBER WITH ONE 5/8" GALVANIZED LAG AT EACH END.

5 / C5.0 WATER TANK PAD DETAIL

SCALE: N.T.S.

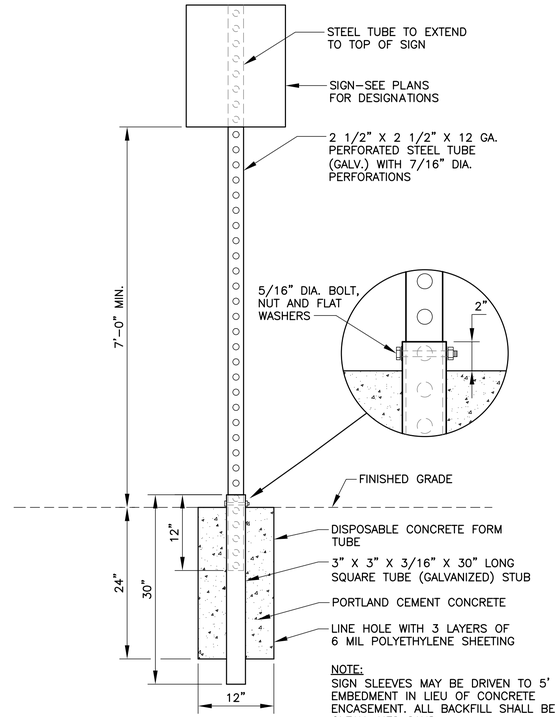

NOTE:
SIGN SLEEVES MAY BE DRIVEN TO 5' EMBEDMENT IN LIEU OF CONCRETE ENCASEMENT. ALL BACKFILL SHALL BE CLEAN, NFS SAND.

3 / C5.0 SIGN AND FOUNDATION DETAIL

SCALE: N.T.S.

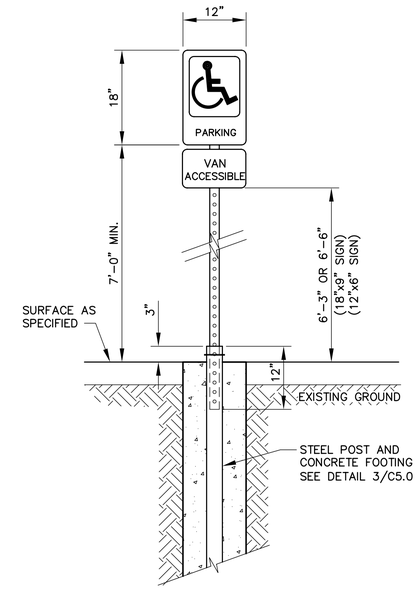

NOTES:

1. SIGNS CAN BE MOUNTED ON THE BUILDING PROVIDED THAT THEY ARE NOT OBSTRUCTED BY TREES, SHRUBBERY, ETC.
2. SIGNS SHALL NOT BE MOUNTED ON DOORS OR WINDOWS AND CAN NOT BE MORE THAN TEN FEET FROM THE EDGE OF THE PARKING STALL.
3. SIGN SHALL BE CENTERED BETWEEN PARKING SPACE STRIPING (1 IN DIAGRAM). MOUNTING HEIGHTS FOR BUILDING ARE SAME AS THOSE FOR POLE MOUNTING INDICATED ON THIS SHEET.
4. INSTALL A *NO PARKING* SIGN CENTERED AT THE FRONT OF THE 8 FOOT WIDE ACCESS AISLE (2 IN DIAGRAM BELOW).
5. ONE OUT OF EIGHT REQUIRED HANDICAP SPACES MUST BE VAN ACCESSIBLE.

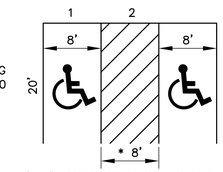

(* 5' WIDTH WHERE NOT ADJACENT TO VAN ACCESSIBLE STALL)

1 / C5.0 ACCESSIBLE PARKING SIGN DETAIL

SCALE: N.T.S.

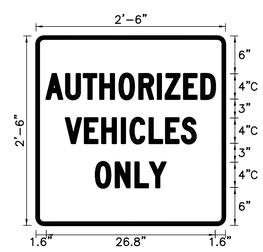

NOTES:

1. BORDER RADIUS = 1.13", THICKNESS = 0.38", AND OFFSET FROM EDGE = 0.14"
2. LEGEND AND BACKGROUND COLOR AS INDICATED ON SHEET C2.0
3. LETTERING SHALL CONFORM TO MUTCD SERIES C.

4 / C5.0 SIGN DETAIL

SCALE: N.T.S.

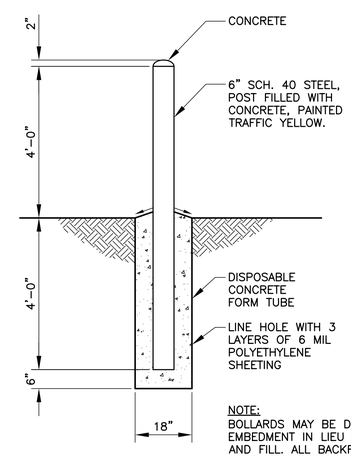

NOTE:
BOLLARDS MAY BE DRIVEN OR DRILLED TO 10' EMBEDMENT IN LIEU OF CONCRETE ENCASEMENT AND FILL. ALL BACKFILL SHALL BE CLEAN, NFS SAND. SEAL WELD CAP ON DRIVEN BOLLARDS TO PREVENT WATER ENTRY INTO BORE OF PIPE.

ELEVATION

2 / C5.0 BOLLARD DETAIL

SCALE: N.T.S.

STATE OF ALASKA 49TH
Zane W. Shanklin
CE 7056
REGISTERED PROFESSIONAL ENGINEER

Date Stamped: 04/15/2009

Date	Revision	By

USKH
Architecture • Engineering
Land Surveying • Planning

2515 'A' Street
Anchorage, Alaska 99503
(907) 276–4245

544 4th Avenue, Suite 102
Fairbanks, Alaska 99701
(907) 452–2128

3031 Clinton Drive
Suite 200
Juneau, Alaska 99801
(907) 790–2901

351 W Parks Hwy, Suite 200
Wasilla, Alaska 99654
(907) 376–7815

Project:
DOMESTIC VIOLENCE SHELTER

TUNDRA WOMEN'S COALITION
P.O. BOX 2029
250 6th AVENUE
BETHEL, ALASKA 99559

Project Mgr.	JC	
Drawn	GIS	
Checked	SDG	ZWS
Date	15 APRIL 2009	

Sheet Contents:
DETAILS

Sheet No.:
C5.0

USKH W.O. 1074400

DRAWING NAME: I:\1074400\Dwgs\c\Sheets\1074400C50.dwg PLOTTED: Apr 15, 2009 – 10:55am

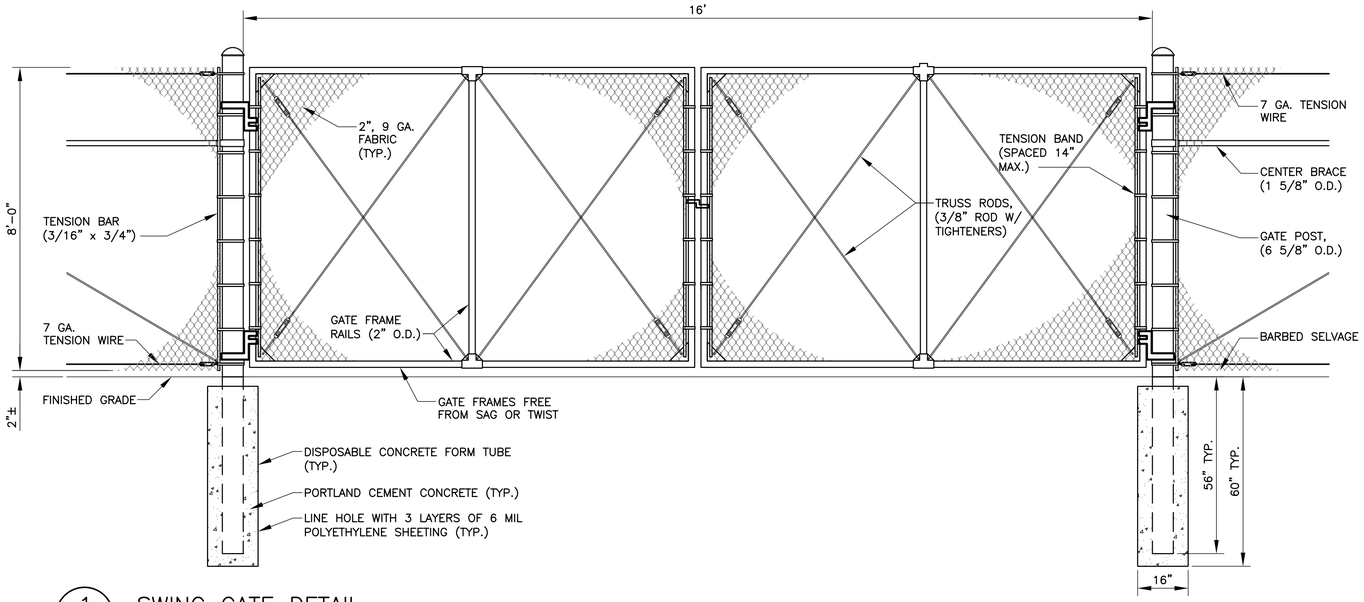

1 C5.1 SWING GATE DETAIL

SCALE: N.T.S.

NOTES:

1. ALL CONCRETE USED FOR FENCE FOOTINGS SHALL BE 3000 PSI MINIMUM, CAST IN DISPOSABLE CONCRETE FORM TUBE. LINE HOLE WITH 3 LAYERS OF 6 MIL POLYETHYLENE SHEETING.
2. FINISHED CONCRETE TO BE RECESSED 3" BELOW FINISHED GRADE. BACKFILL AND COMPACT AROUND RECESSED CONCRETE WITH EXCAVATED MATERIAL (TYPICAL ALL CONCRETE POSTS IN GROUND)
3. POSTS MAY BE DRIVEN OR DRILLED IN LIEU OF CONCRETE ENCASEMENT. PROVIDE 10' MINIMUM EMBEDMENT FOR ALL POSTS, EXCEPT PROVIDE 5' MINIMUM EMBEDMENT FOR LINE POSTS. ALL BACKFILL SHALL BE CLEAN, NFS SAND.
4. PROVIDE PRIVACY SLATS.

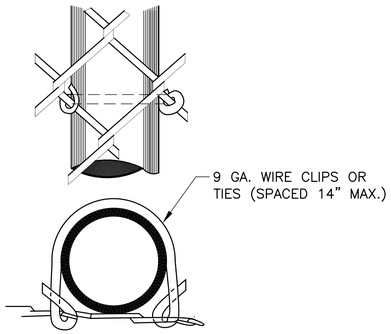

TYPICAL METHOD OF TYING FABRIC TO TUBULAR POSTS

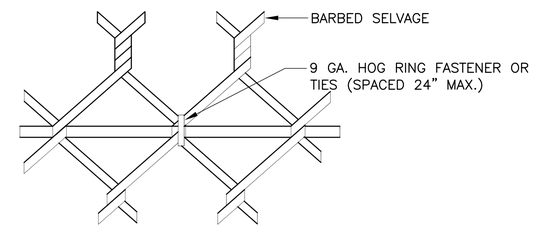

TYPICAL METHOD OF TYING FABRIC TO TENSION WIRE

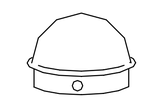

ACORN OR DOME CAP FOR GATE/TERMINAL POST

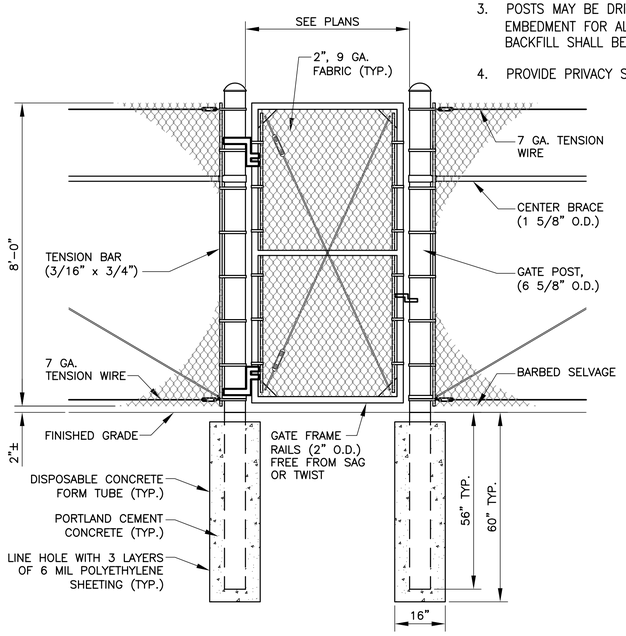

2 C5.1 PEDESTRIAN GATE DETAIL

SCALE: N.T.S.

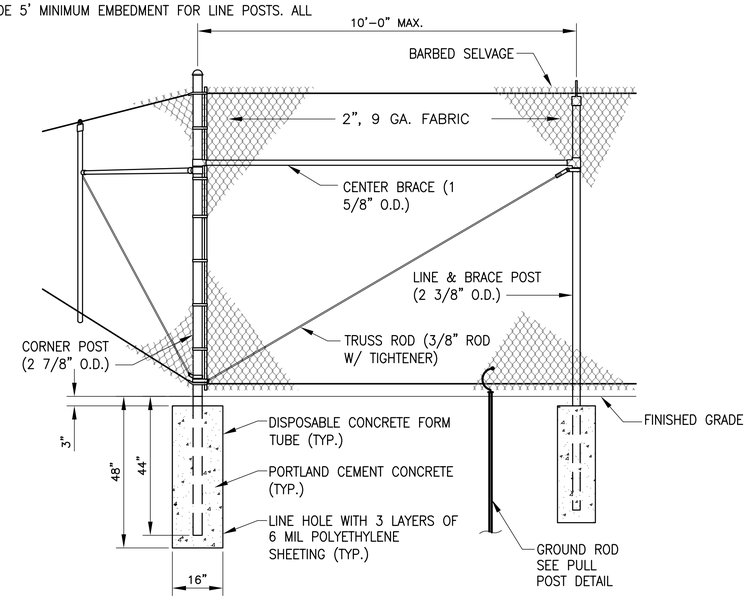

TYPICAL CORNER TERMINAL

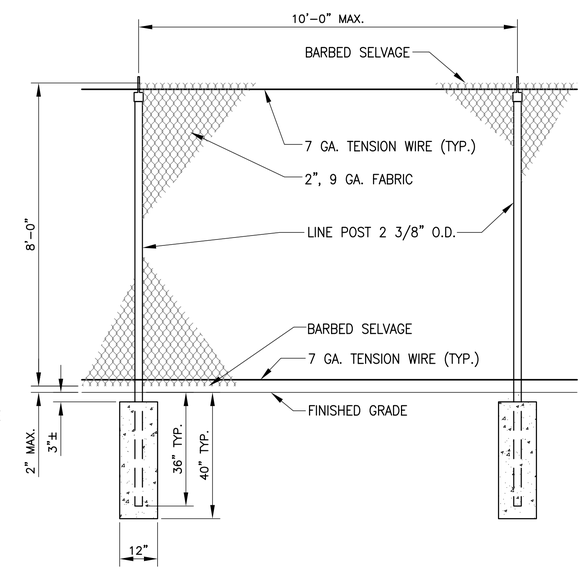

TYPICAL LINE SECTION

3 C5.1 TYPICAL FENCE DETAILS

SCALE: N.T.S.

STATE OF ALASKA 49TH
Zane W. Shanklin
CE 7056
REGISTERED PROFESSIONAL ENGINEER

Date Stamped: 04/15/2009

Date	Revision	By

USKH

Architecture • Engineering
Land Surveying • Planning

2515 'A' Street
Anchorage, Alaska 99503
(907) 276-4245

544 4th Avenue, Suite 102
Fairbanks, Alaska 99701
(907) 452-2128

3031 Clinton Drive
Suite 200
Juneau, Alaska 99801
(907) 790-2901

351 W Parks Hwy, Suite 200
Wasilla, Alaska 99654
(907) 376-7815

Project:
DOMESTIC VIOLENCE SHELTER

TUNDRA WOMEN'S COALITION
P.O. BOX 2029
250 6th AVENUE
BETHEL, ALASKA 99559

Project Mgr.	JC	
Drawn	GIS	
Checked	SDG	ZWS
Date	15 APRIL 2009	

Sheet Contents:
FENCE DETAILS

Sheet No.:
C5.1

USKH W.O. 1074400

DRAWING NAME: I:\1074400\Dwgs\c\Sheets\1074400C51.dwg PLOTTED: Apr 15, 2009 - 10:55am

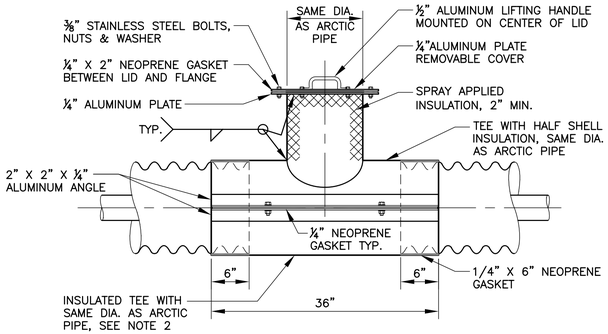

NOTES:

1. ACCESS TEE SHALL BE WATER TIGHT AND PLACED OVER ALL VALVES. STENCIL NAME OF TYPE OF VALVE OR PORT ON ACCESS TEE COVER.
2. MINIMUM 3" OF INSULATION COATED WITH 75 MILS OF POLYUREA ELASTOMER SHALL BE APPLIED TO AREAS WITH EXPOSED HDPE PIPE.

5 / C6.1 ACCESS TEE DETAIL

SCALE: N.T.S.

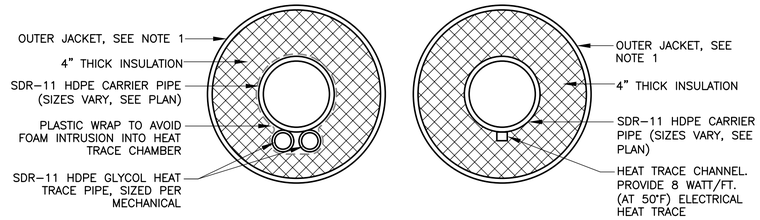

GLYCOL HEAT TRACE

ELECTRIC HEAT TRACE

NOTE:

1. OUTER JACKET OF ABOVE GRADE PIPING SHALL BE CMP. BELOW GRADE PIPING SHALL BE JACKETED WITH EITHER CMP OR HDPE.

2 / C6.1 ARCTIC PIPE DETAIL

SCALE: N.T.S.

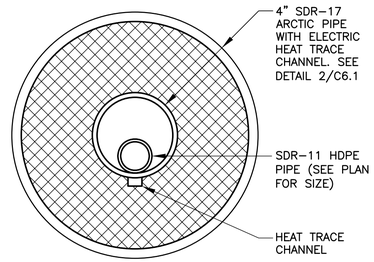

NOTES:

1. PIPE BEDDING TO EXTEND FROM 6" ABOVE TO 6" BELOW AND 18" TO EITHER SIDE OF PIPE. PLACE BEDDING IN 6" MAX. LIFTS. COMPACT TO 90% OF MAX. DENSITY.
2. TRENCH WALL SLOPES WILL VARY WITH SOIL STRENGTH AND CHARACTERISTICS. SLOPES SHALL CONFORM TO OSHA SAFETY STANDARDS. PROVIDE ENGINEERED SHORING AS REQUIRED TO PROTECT WORKERS AND EXISTING FEATURES.

1 3 / C6.1 WATER PIPE DETAIL

SCALE: N.T.S.

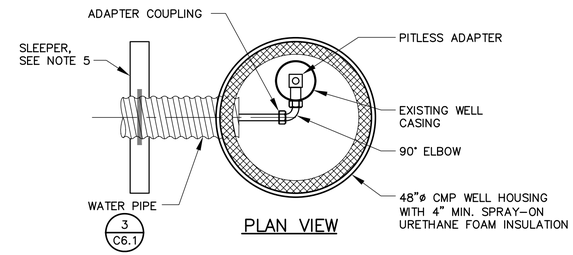

PLAN VIEW

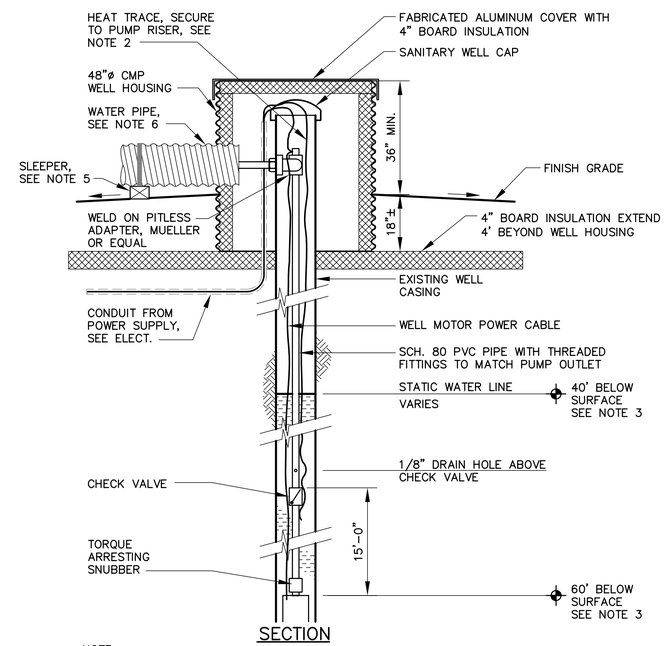

SECTION

NOTE:

1. WELL CONNECTION SHALL BE AT 90° TO WELL AS SHOWN. EXTEND HEAT TRACE TO WELL CASING AND INSULATE CONNECTION WITH POURED URETHANE FOAM.
2. SEPARATE 8 WATT/FOOT (AT 50°F) HEAT TRACES SHALL BE PROVIDED FOR SUPPLY PIPE AND WELL RISER ON SEPARATE CIRCUITS. WELL RISER HEAT TRACE SHALL EXTEND AT LEAST 15' BELOW GROUND.
3. CONTRACTOR TO CONFIRM AND RECORD DEPTH TO STATIC WATER. ADJUST PUMP DEPTH AS REQUIRED TO ACCOMMODATE DDOWN AT THE MAXIMUM PUMPING RATE.
4. EXISTING WELL CASING TO REMAIN. REMOVE ALL OTHER WELL APPURTENANCES.
5. BAND PIPE TO 4 X 6 SLEEPERS SPACED 10 FEET ON CENTER.
6. PROVIDE CLEANLY CUT PENETRATION OF MINIMAL SIZE. FILL PENETRATION WITH FOAM INSULATION.

1 1 / C6.1 WELL PUMP SETTING DETAIL

SCALE: N.T.S.

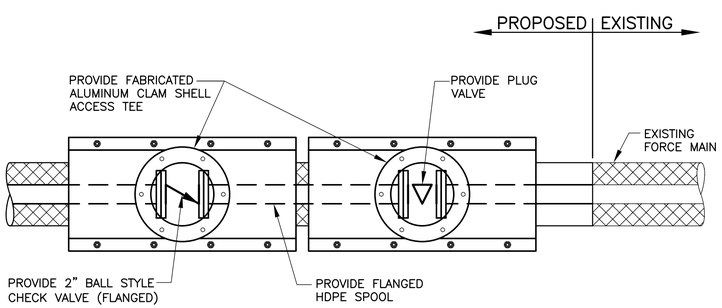

PLAN VIEW

6 / C6.1 CONNECTION TO EXISTING FORCE MAIN

SCALE: N.T.S.

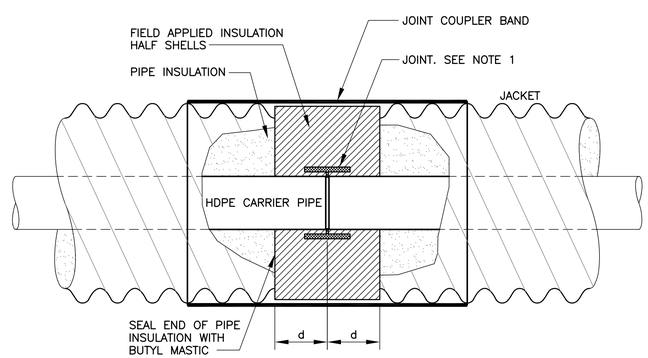

NOTES:

1. WATER OR FORCEMAIN JOINTS SHALL BE FUSED OR ELECTROFUSION.
2. CUTBACK DIMENSION d = MINIMUM DISTANCE REQUIRED ACCORDING TO MANUFACTURER'S RECOMMENDATIONS

4 / C6.1 ARCTIC PIPE JOINT DETAIL

SCALE: N.T.S.

STATE OF ALASKA 49TH
Zane W. Shanklin
CE 7056
REGISTERED PROFESSIONAL ENGINEER

Date Stamped: 04/15/2009

Date	Revision	By
4/21/09	WATER LINE REROUTE	SDG

USKH
Architecture • Engineering
Land Surveying • Planning

2515 'A' Street
Anchorage, Alaska 99503
(907) 276-4245

544 4th Avenue, Suite 102
Fairbanks, Alaska 99701
(907) 452-2128

3031 Clinton Drive
Suite 200
Juneau, Alaska 99801
(907) 790-2901

351 W Parks Hwy, Suite 200
Wasilla, Alaska 99654
(907) 376-7815

Project:

DOMESTIC VIOLENCE SHELTER

TUNDRA WOMEN'S COALITION

P.O. BOX 2029
250 6th AVENUE
BETHEL, ALASKA 99559

Project Mgr.	JC	
Drawn	GIS	
Checked	SDG	ZWS
Date	21 APRIL 2009	

Sheet Contents:

UTILITY DETAILS

Sheet No.:

C6.1

USKH W.O. 1074400

DRAWING NAME: I:\1074400\Dwgs\c\Sheets\1074400C61.dwg PLOTTED: Apr 21, 2009 - 9:10am

GENERAL STRUCTURAL NOTES

A. DESIGN CRITERIA

1. BUILDING CODE ..... 2006 IBC (INTERNATIONAL BUILDING CODE)
2. LIVE LOADS:
   - FLOOR LIVE LOAD ..... 100 PSF
   - FLOOR LIVE LOAD (MECHANICAL ROOMS) ..... 250 PSF OR ACTUAL WEIGHT OF EQUIPMENT
3. SNOW LOADS:
   - GROUND SNOW LOAD P_g ..... 40 PSF
   - FLAT ROOF SNOW LOAD P_f ..... 31 PSF
   - SNOW EXPOSURE FACTOR C_e 0.9
   - SNOW LOAD IMPORTANCE FACTOR I 1.0
   - THERMAL FACTOR C_t 1.1
4. WIND LOADS:
   - BASIC WIND SPEED ..... 120 MPH (3 SECOND GUST)
   - IMPORTANCE FACTOR 1.0
   - EXPOSURE C
   - INTERNAL PRESSURE COEFFICIENT 0.18
   - COMPONENTS AND CLADDING DESIGN PRESSURE ..... ROOF CLADDING : 83 PSF, WALL CLADDING : 47 PSF
5. SEISMIC LOADS:
   - SEISMIC USE GROUP I
   - S_{DS} 0.31
   - S_{D1} 0.15
   - SITE CLASS ..... D
   - BASIC SEISMIC FORCE RESISTING SYSTEM ..... LIGHT FRAME WALLS WITH WOOD SHEAR PANELS & DRIVEN PIPE PILES
   - DESIGN BASE SHEAR 0.13W
   - ANALYSIS PROCEDURE ..... EQUIVALENT LATERAL FORCE METHOD

B. FOUNDATION

1. FOUNDATION DESIGN IS BASED ON A GEOTECHNICAL INVESTIGATION PREPARED BY SHANNON & WILSON.
2. ALL ORGANIC AND/ OR OTHER UNSUITABLE MATERIAL SHALL BE REMOVED FROM SUB-GRADE AND BACK FILL AREAS AND THE EXCAVATION SHALL BE BACK FILLED WITH STRUCTURAL FILL.

C. STRUCTURAL STEEL

1. ALL STRUCTURAL STEEL WIDE FLANGE MEMBERS SHALL BE ASTM A992 GRADE 50 (Fy = 50 KSI).
2. SQUARE/ RECTANGULAR HOLLOW STRUCTURAL SECTIONS (HSS) SHALL CONFORM TO ASTM A500 GRADE B (Fy = 46 KSI).
3. ROUND HSS (PIPES) SHALL CONFORM TO ASTM A53 GRADE B (Fy = 35 KSI).
4. ANGLES, CHANNELS, AND PLATES SHALL BE ASTM A36 (Fy = 36 KSI).
5. ALL STRUCTURAL STEEL SHALL BE DETAILED AND FABRICATED IN ACCORDANCE WITH THE LATEST EDITION OF THE AISC MANUAL OF STEEL CONSTRUCTION.
6. WELDING SHALL BE PERFORMED WITH E70XX ELECTRODES. WELDING SHALL BE DONE BY QUALIFIED WELDERS AND SHALL CONFORM TO THE LATEST EDITION OF THE AWS CODE. ALL WELDS ARE INTENDED TO BE CONTINOUS UNLESS NOTED OTHERWISE.
7. FIELD WELDS NOTED THROUGHOUT THE CONTRACT DOCUMENTS ARE ACCEPTABLE LOCATIONS FOR FIELD WELDING. AT THE CONTRACTOR'S OPTION, FIELD WELDS MAY BE PERFORMED IN THE SHOP.
8. BOLTED CONNECTIONS SHALL BE ACCOMPLISHED WITH ASTM A325 (TYPE N) HIGH STRENGTH BOLTS IN STANDARD HOLES UNLESS NOTED OTHERWISE. ANCHOR BOLTS SHALL BE ASTM F1554 AS INDICATED. ANCHOR BOLTS ARE TO BE ACCURATELY PLACED WITH SETTING TEMPLATES.
9. THE CONTRACTOR SHALL BE RESPONSIBLE FOR THE CONTROL OF ALL ERECTION PROCEDURES AND SEQUENCES WITH REGARDS TO TEMPERATURE DIFFERENTIALS.

D. WOOD CONSTRUCTION

1. ALL FRAME LUMBER SHALL BE DOUG FIR/ LARCH NO. 2 OR BETTER/ EQUAL.
2. LAMINATED VENEER LUMBER (LVL) SHALL MEET THE FOLLOWING MINIMUM CRITERIA:
   - A. 1 3/4" WIDE : Fb = 2800 PSI, E = 2,000,000 PSI
   - B. 3 1/2" & WIDER : Fb = 3100 PSI, E = 2,000,000 PSI
3. GLUED LAMINATED BEAMS SHALL BE 24F-V8, AND SHALL MEET THE FOLLOWING MINIMUM CRITERIA:
   Fb = 2400 PSI
   E = 1,800,000 PSI
4. BOLTS USED IN WOOD CONNECTIONS SHALL BE ASTM A307.
5. OPEN-WEB FLOOR TRUSS DESIGN PER MANUFACTURER.
6. PLYWOOD SHALL MEET THE FOLLOWING MINIMUM CRITERIA:
   - A. ROOF SHEATHING SHALL BE 5/8" APA RATED WITH 40/20 SPAN RATING
   - B. FLOOR & MECHANICAL PLATFORM SHEATHING SHALL BE 3/4" T&G APA RATED WITH 40/20 SPAN RATING
   - C. WALL SHEATHING SHALL BE 7/16" APA RATED WITH 24/0 SPAN RATING

E. LIGHT GAUGE STEEL FRAMING

1. ALL METAL STUDS, JOISTS, AND ACCESSORIES SHALL BE DESIGNED IN ACCORDANCE WITH THE AMERICAN IRON AND STEEL INSTITUTE SPECIFICATION FOR THE DESIGN OF COLD-FORMED STEEL STRUCTURAL MEMBERS. MEMBERS SHALL BE ASTM A446, GRADE D (Fy=50 KSI) FOR 12, 14 AND 16 GAUGE, AND ASTM A446, GRADE A (Fy=33 KSI) FOR 18 GAUGE AND LIGHTER. FASTENERS SHALL BE #10 SELF DRILLING, SELF TAPPING SCREWS, OR AS INDICATED ON THE DRAWINGS. PROVIDE SHOP DRAWINGS WITH DETAILS FOR REVIEW.

F. STRUCTURAL INSULATED PANELS

1. MANUFACTURER IS RESPONSIBLE FOR ALL PANEL ENGINEERING. DESIGN PANELS FOR LOADS INDICATED AND IN CONFORMANCE WITH ALL REQUIREMENTS OF THE 2006 IBC.

SPECIAL INSPECTIONS

THE FOLLOWING STRUCTURAL ITEMS REQUIRE SPECIAL INSPECTION PER IBC SECTION 1704. THESE INSPECTIONS SHALL BE PERFORMED BY A SPECIAL INSPECTOR QUALIFIED TO PERFORM THE TYPES OF INSPECTIONS SPECIFIED. SEE PROJECT SPECIFICATIONS FOR ADDITIONAL REQUIREMENTS FOR INSPECTION AND TESTING THAT ARE NOT PART OF SPECIAL INSPECTIONS. OWNER IS RESPONSIBLE FOR SPECIAL INSPECTION COST. CONTRACTOR IS RESPONSIBLE FOR COORDINATING SPECIAL INSPECTIONS WITH INSPECTOR.

ITEM	INSPECTION DESCRIPTION	FREQUENCY
PILES	VISUAL INSPECTION OF PILE INSTALLATION	FULLTIME
FIELD WELDING	PERIODIC VISUAL INSPECTION OF FIELD WELDS	VISUAL INSPECTION OF ALL WELDS AFTER COMPLETE
FRAMING	VISUAL INSPECTION OF BEAM PLACEMENT ON TOP OF PILES	ONE INSPECTION AFTER COMPLETION
	VISUAL INSPECTION OF FLOOR FRAMING	ONE INSPECTION AFTER COMPLETION
	VISUAL INSPECTION OF WALL FRAMING	ONE INSPECTION AFTER COMPLETION
	VISUAL INSPECTION OF ROOF FRAMING	ONE INSPECTION AFTER COMPLETION

INSULATED PANEL DESIGN CRITERIA

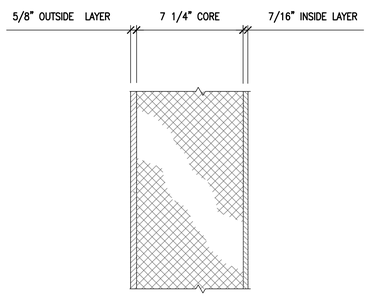

DESIGN PANEL FOR LOADS INDICATED ON SHEET S6.0

Date Stamped: 4-21-09

Date	Revision	By

USKH
Architecture • Engineering
Land Surveying • Planning

2515 'A' Street
Anchorage, Alaska 99503
(907) 276-4245

544 4th Avenue, Suite 102
Fairbanks, Alaska 99701
(907) 452-2128

3031 Clinton Drive
Suite 200
Juneau, Alaska 99801
(907) 790-2901

351 W Parks Hwy, Suite 200
Wasilla, Alaska 99654
(907) 376-7815

Project:
DOMESTIC VIOLENCE SHELTER

TUNDRA WOMEN'S COALITION
P.O. BOX 2029
250 6th AVENUE
BETHEL, ALASKA 99559

Project Mgr.	JC	
Drawn	DJL	
Checked	GAL	
Date	21 APRIL 2009	

Sheet Contents:
GENERAL NOTES

Sheet No.:
S0.0

USKH W.O. 1074400

DRAWING NAME: C:\Documents and Settings\Deanne\My Documents\drawings\uskh\1074400-Tundra Women's\1074400s00.dwg PLOTTED: Apr 21, 2009 - 10:23am

NOTE:

THE PILES AND GIRDERS BETWEEN GRIDS 1 AND 13 HAVE BEEN DESIGNED WITH CONSIDERATION FOR A FUTURE SECOND FLOOR. NO OTHER COMPONENTS INCLUDING BUT NOT LIMITED TO SHEAR WALLS, BEARING WALLS, LATERAL RESISTANCE, SNOW DRIFTING CREATED BY A SECOND FLOOR, ETC. HAVE BEEN CONSIDERED IN THIS DESIGN. IN THE EVENT THE OWNER UNDERTAKES THE ADDITION OF A SECOND FLOOR, A STRUCTURAL ENGINEER WOULD NEED TO BE RETAINED TO EVALUATE THE NON-CONSIDERED COMPONENTS.

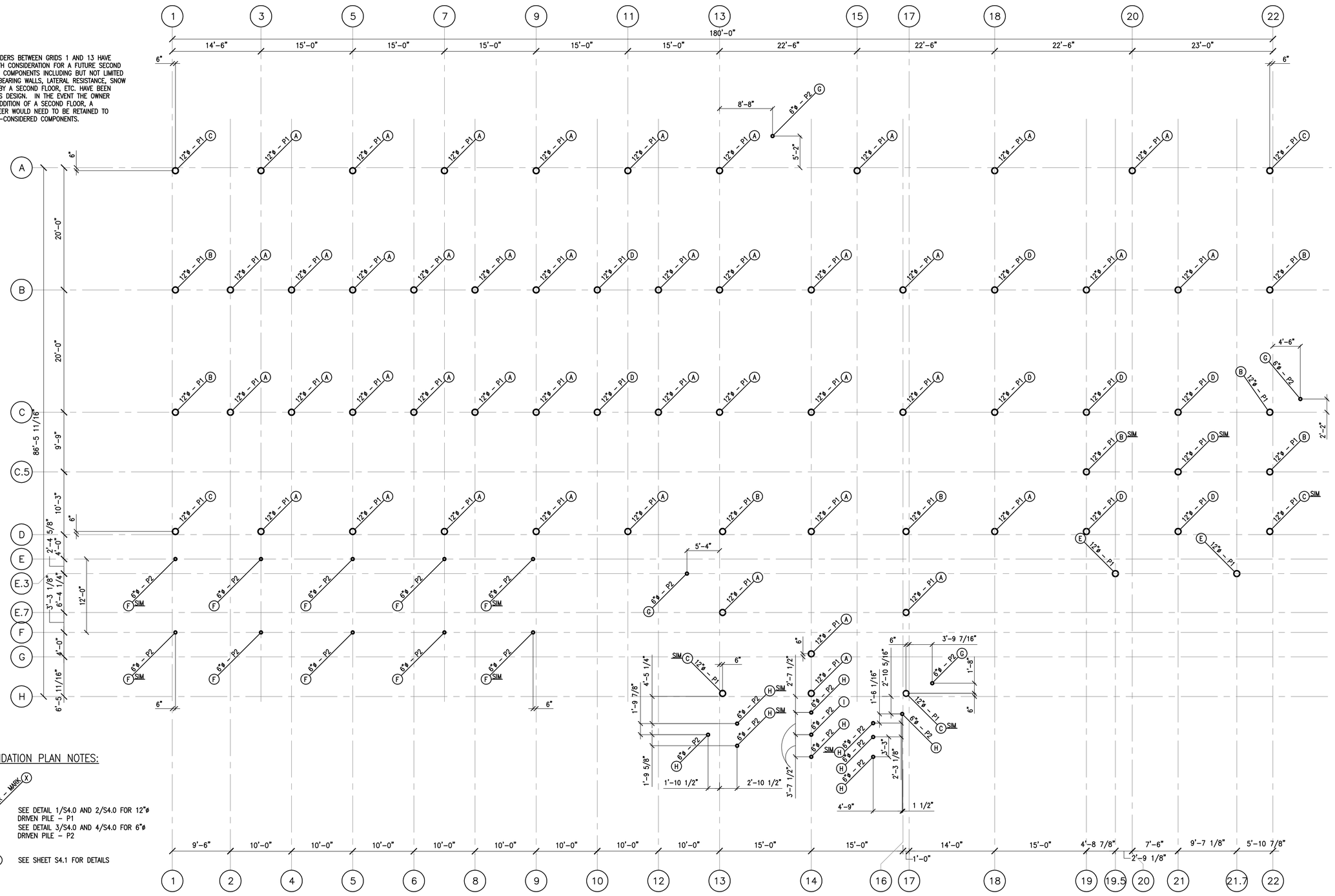

PILE / FOUNDATION PLAN NOTES:

PILE DIAMETER - MARK (X)

1. SEE DETAIL 1/S4.0 AND 2/S4.0 FOR 12"ø DRIVEN PILE - P1
SEE DETAIL 3/S4.0 AND 4/S4.0 FOR 6"ø DRIVEN PILE - P2

(X) SEE SHEET S4.1 FOR DETAILS

1 / S1.0 PILE/ FOUNDATION PLAN

SCALE: 1/8" = 1'-0"

STATE OF ALASKA 49TH GREGORY A. LIEBL No. CE 9225 REGISTERED PROFESSIONAL ENGINEER

Date Stamped: 4-21-09

Date	Revision	By

USKH

Architecture • Engineering
Land Surveying • Planning

2515 'A' Street
Anchorage, Alaska 99503
(907) 276-4245

544 4th Avenue, Suite 102
Fairbanks, Alaska 99701
(907) 452-2128

3031 Clinton Drive
Suite 200
Juneau, Alaska 99801
(907) 790-2901

351 W Parks Hwy, Suite 200
Wasilla, Alaska 99654
(907) 376-7815

Project:

DOMESTIC VIOLENCE SHELTER

TUNDRA WOMEN'S COALITION

P.O. BOX 2029
250 6th AVENUE
BETHEL, ALASKA 99559

Project Mgr.	JC
Drawn	DJL
Checked	GAL
Date	21 APRIL 2009

Sheet Contents:

PILE / FOUNDATION PLAN

Sheet No.:

S1.0

USKH W.O. 1074400

DRAWING NAME: C:\Documents and Settings\Deanne\My Documents\drawings\uskh\1074400-Tundra Women's\1074400s10.dwg PLOTTED: Apr 21, 2009 - 10:23am

NOTE:

THE PILES AND GIRDERS BETWEEN GRIDS 1 AND 13 HAVE BEEN DESIGNED WITH CONSIDERATION FOR A FUTURE SECOND FLOOR. NO OTHER COMPONENTS INCLUDING BUT NOT LIMITED TO SHEAR WALLS, BEARING WALLS, LATERAL RESISTANCE, SNOW DRIFTING CREATED BY A SECOND FLOOR, ETC. HAVE BEEN CONSIDERED IN THIS DESIGN. IN THE EVENT THE OWNER UNDERTAKES THE ADDITION OF A SECOND FLOOR, A STRUCTURAL ENGINEER WOULD NEED TO BE RETAINED TO EVALUATE THE NON-CONSIDERED COMPONENTS.

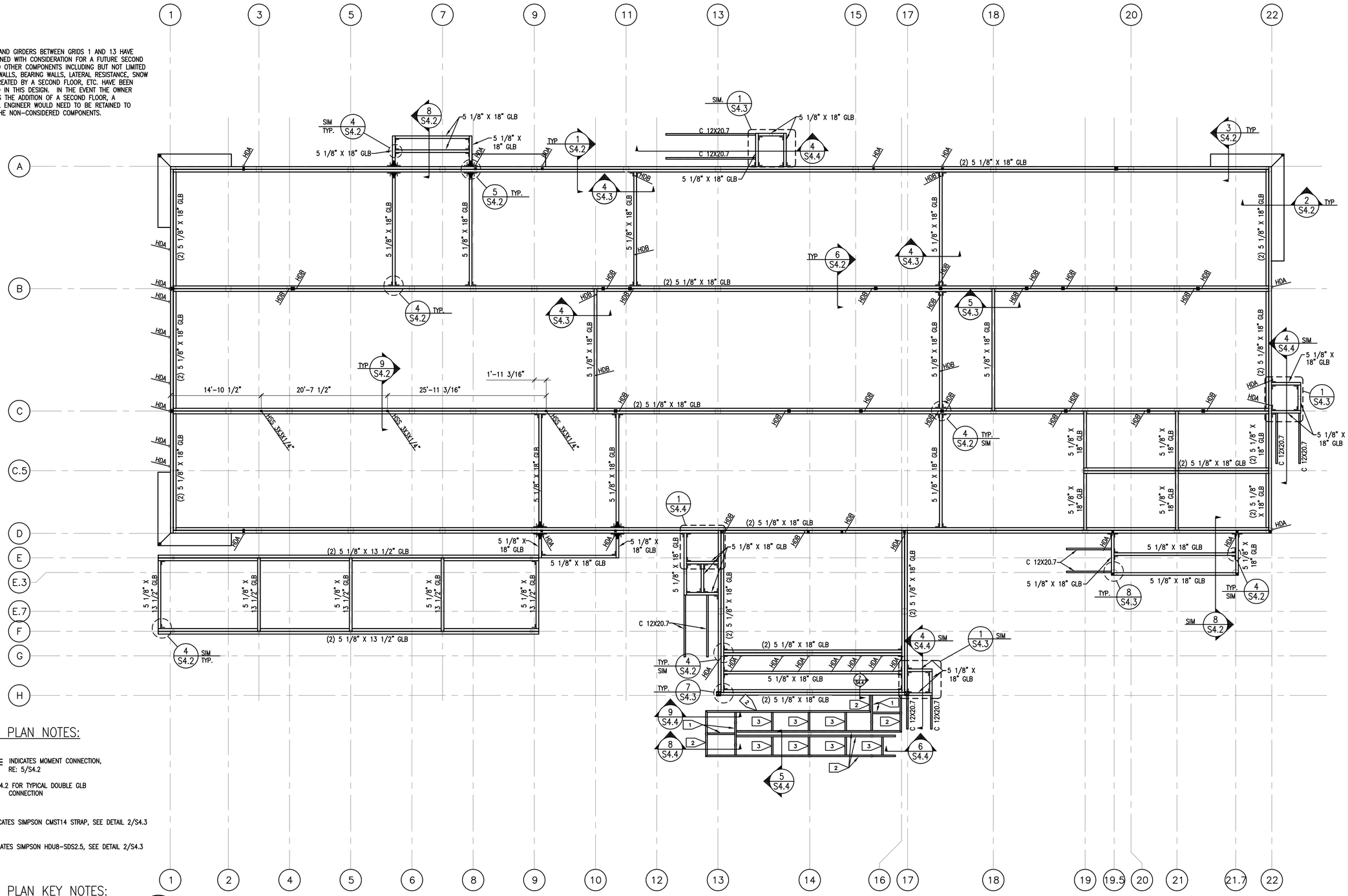

FRAMING PLAN NOTES:

1. INDICATES MOMENT CONNECTION, RE: 5/S4.2
2. REFER 7/S4.2 FOR TYPICAL DOUBLE GLB CONNECTION
3. HDA — INDICATES SIMPSON CMST14 STRAP, SEE DETAIL 2/S4.3
   HDB — INDICATES SIMPSON HDU8-SDS2.5, SEE DETAIL 2/S4.3

FRAMING PLAN KEY NOTES:

1. HSS 6X3X1/4"
2. C 12X20.7
3. HSS 3X3X1/4"

1 / S2.0 MAIN FLOOR GIRDER FRAMING PLAN

SCALE: 1/8" = 1'-0"

STATE OF ALASKA 49TH GREGORY A. LIEBL No. CE 9225 REGISTERED PROFESSIONAL ENGINEER

Date Stamped: 4-21-09

Date	Revision	By

USKH

Architecture • Engineering

Land Surveying • Planning

2515 'A' Street
Anchorage, Alaska 99503
(907) 276-4245

544 4th Avenue, Suite 102
Fairbanks, Alaska 99701
(907) 452-2128

3031 Clinton Drive
Suite 200
Juneau, Alaska 99801
(907) 790-2901

351 W Parks Hwy, Suite 200
Wasilla, Alaska 99654
(907) 376-7815

Project:

DOMESTIC VIOLENCE SHELTER

TUNDRA WOMEN'S COALITION

P.O. BOX 2029
250 6th AVENUE
BETHEL, ALASKA 99559

Project Mgr.	JC
Drawn	DJL
Checked	GAL
Date	21 APRIL 2009

Sheet Contents:

MAIN FLOOR GIRDER FRAMING PLAN

Sheet No.:

S2.0

USKH W.O. 1074400

DRAWING NAME: C:\Documents and Settings\Deanne\My Documents\drawings\uskh\1074400\s20.dwg PLOTTED: Apr 21, 2009 - 10:24am

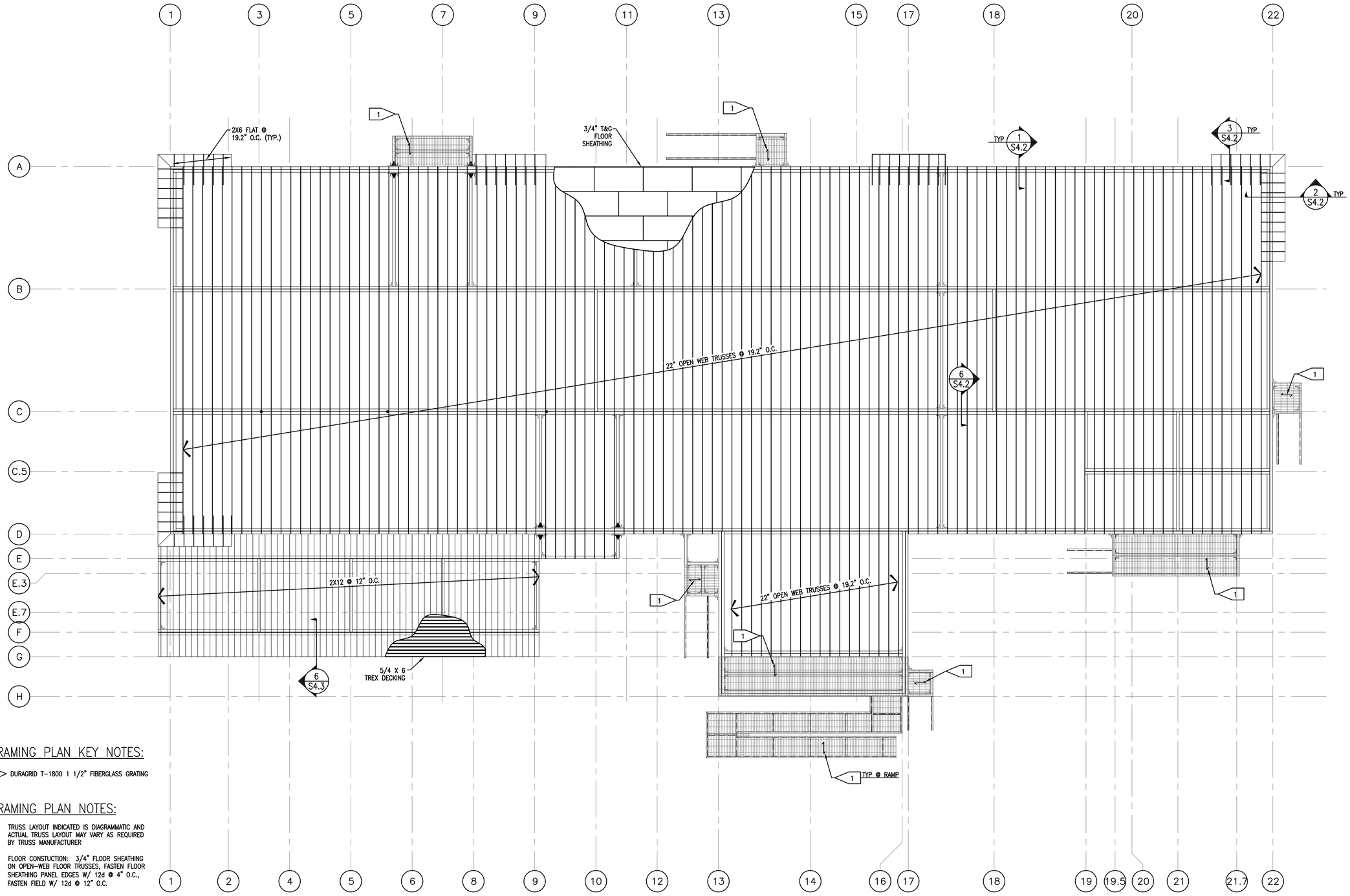

FRAMING PLAN KEY NOTES:

1 DURAGRID T-1800 1 1/2" FIBERGLASS GRATING

FRAMING PLAN NOTES:

1. TRUSS LAYOUT INDICATED IS DIAGRAMMATIC AND ACTUAL TRUSS LAYOUT MAY VARY AS REQUIRED BY TRUSS MANUFACTURER
2. FLOOR CONSTUCTION: 3/4" FLOOR SHEATHING ON OPEN-WEB FLOOR TRUSSES, FASTEN FLOOR SHEATHING PANEL EDGES W/ 12d @ 4" O.C., FASTEN FIELD W/ 12d @ 12" O.C.

1 / S3.0 MAIN FLOOR JOIST FRAMING PLAN

SCALE: 1/8" = 1'-0"

STATE OF ALASKA 49TH GREGORY A. LIEBL No. CE 9225 REGISTERED PROFESSIONAL ENGINEER

Date Stamped: 4-21-09

Date	Revision	By

USKH

Architecture • Engineering

Land Surveying • Planning

2515 'A' Street
Anchorage, Alaska 99503
(907) 276-4245

544 4th Avenue, Suite 102
Fairbanks, Alaska 99701
(907) 452-2128

3031 Clinton Drive
Suite 200
Juneau, Alaska 99801
(907) 790-2901

351 W Parks Hwy, Suite 200
Wasilla, Alaska 99654
(907) 376-7815

Project:

DOMESTIC VIOLENCE SHELTER

TUNDRA WOMEN'S COALITION

P.O. BOX 2029
250 6th AVENUE
BETHEL, ALASKA 99559

Project Mgr.	JC
Drawn	DJL
Checked	GAL
Date	21 APRIL 2009

Sheet Contents:

MAIN FLOOR JOIST FRAMING PLAN

Sheet No.:

S3.0

USKH W.O. 1074400

DRAWING NAME: C:\Documents and Settings\Deanne\My Documents\drawings\uskh\1074400-Tundra Women's\1074400s30.dwg PLOTTED: Apr 21, 2009 - 10:24am

PILE (P) SCHEDULE					
MARK	PILE TYPE	SIZE	EMBEDDED LENGTH (SEE DETAILS)	TOTAL LENGTH (SEE DETAILS)	QUANTITY
P1	DRIVEN	12"ø STANDARD	55'-0"	60'-0"	67
P2	DRIVEN	6"ø STANDARD	35'-0"	40'-0"	24

NOTE:

1. ALL PILES MINIMUM 3/8" WALL THICKNESS
2. CONTRACTOR RESPONSIBLE FOR ALL MEANS AND METHODS TO INSTALL PILES AT DEPTH SHOWN WITHOUT DAMAGE TO PILES INCLUDING CONSIDERATIONS FOR PRE-DRILLING, ETC.

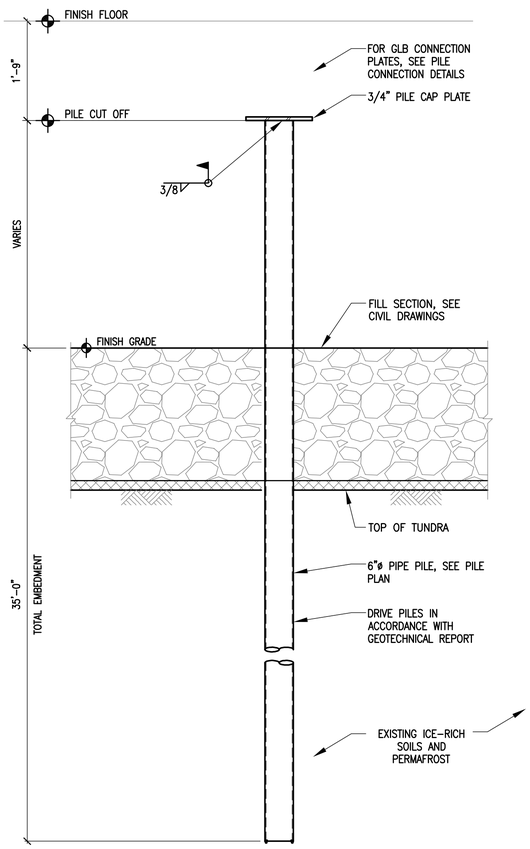

4 S4.0 6"ø DRIVEN PIPE PILE INSTALLATION-P2
SCALE: 3/4" = 1'-0"

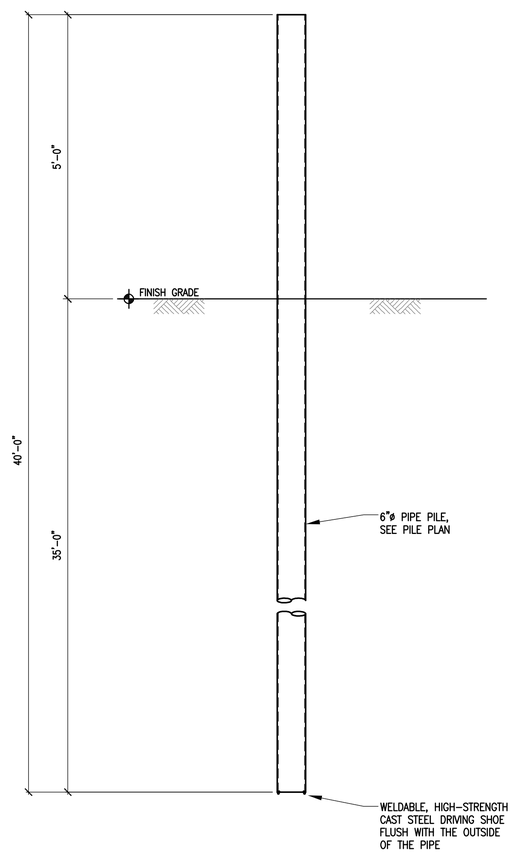

3 S4.0 6"ø DRIVEN PIPE PILE FABRICATION-P2
SCALE: 3/4" = 1'-0"

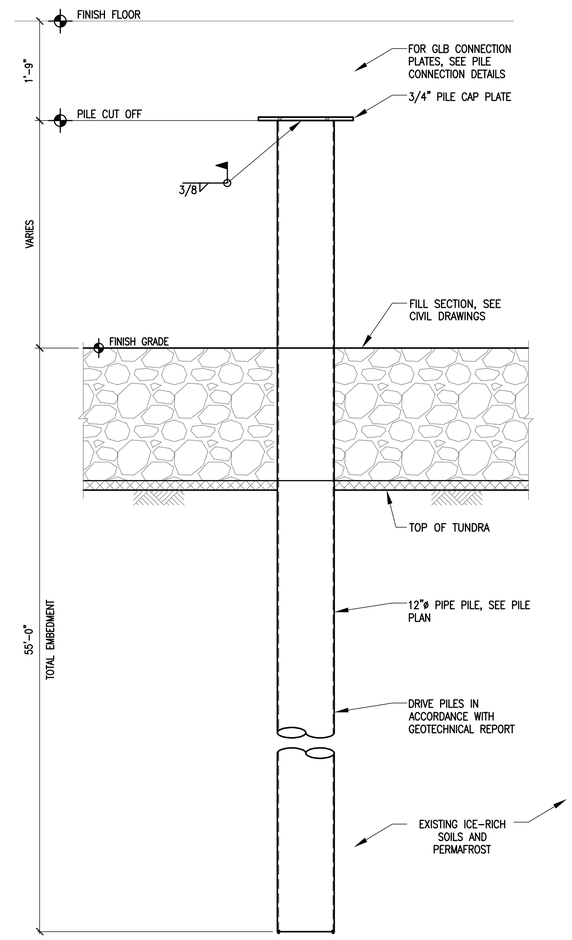

2 S4.0 12"ø DRIVEN PIPE PILE INSTALLATION-P1
SCALE: 3/4" = 1'-0"

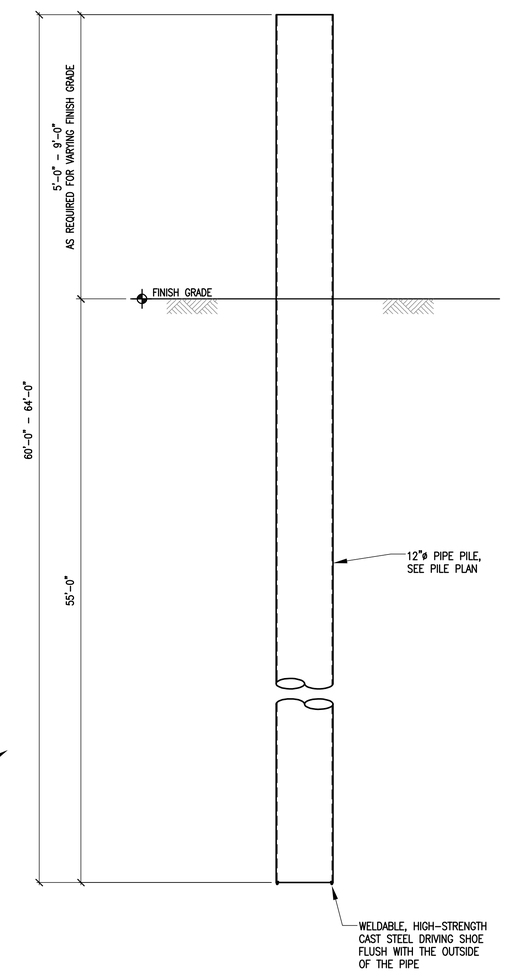

1 S4.0 12"ø DRIVEN PIPE PILE FABRICATION-P1
SCALE: 3/4" = 1'-0"

STATE OF ALASKA 49TH GREGORY A. LIEBL No. CE 9225 REGISTERED PROFESSIONAL ENGINEER

Date Stamped: 4-21-09

Date	Revision	By

USKH
Architecture • Engineering
Land Surveying • Planning

2515 'A' Street
Anchorage, Alaska 99503
(907) 276-4245

544 4th Avenue, Suite 102
Fairbanks, Alaska 99701
(907) 452-2128

3031 Clinton Drive
Suite 200
Juneau, Alaska 99801
(907) 790-2901

351 W Parks Hwy, Suite 200
Wasilla, Alaska 99654
(907) 376-7815

Project:
DOMESTIC VIOLENCE SHELTER

TUNDRA WOMEN'S COALITION
P.O. BOX 2029
250 6th AVENUE
BETHEL, ALASKA 99559

Project Mgr.	JC	
Drawn	DJL	
Checked	GAL	
Date	21 APRIL 2009	

Sheet Contents:
PILE DETAILS

Sheet No.:
S4.0

USKH W.O. 1074400

DRAWING NAME: C:\Documents and Settings\Deanne\My Documents\drawings\uskh\1074400-Tundra Women's\1074400s40.dwg PLOTTED: Apr 21, 2009 - 10:24am

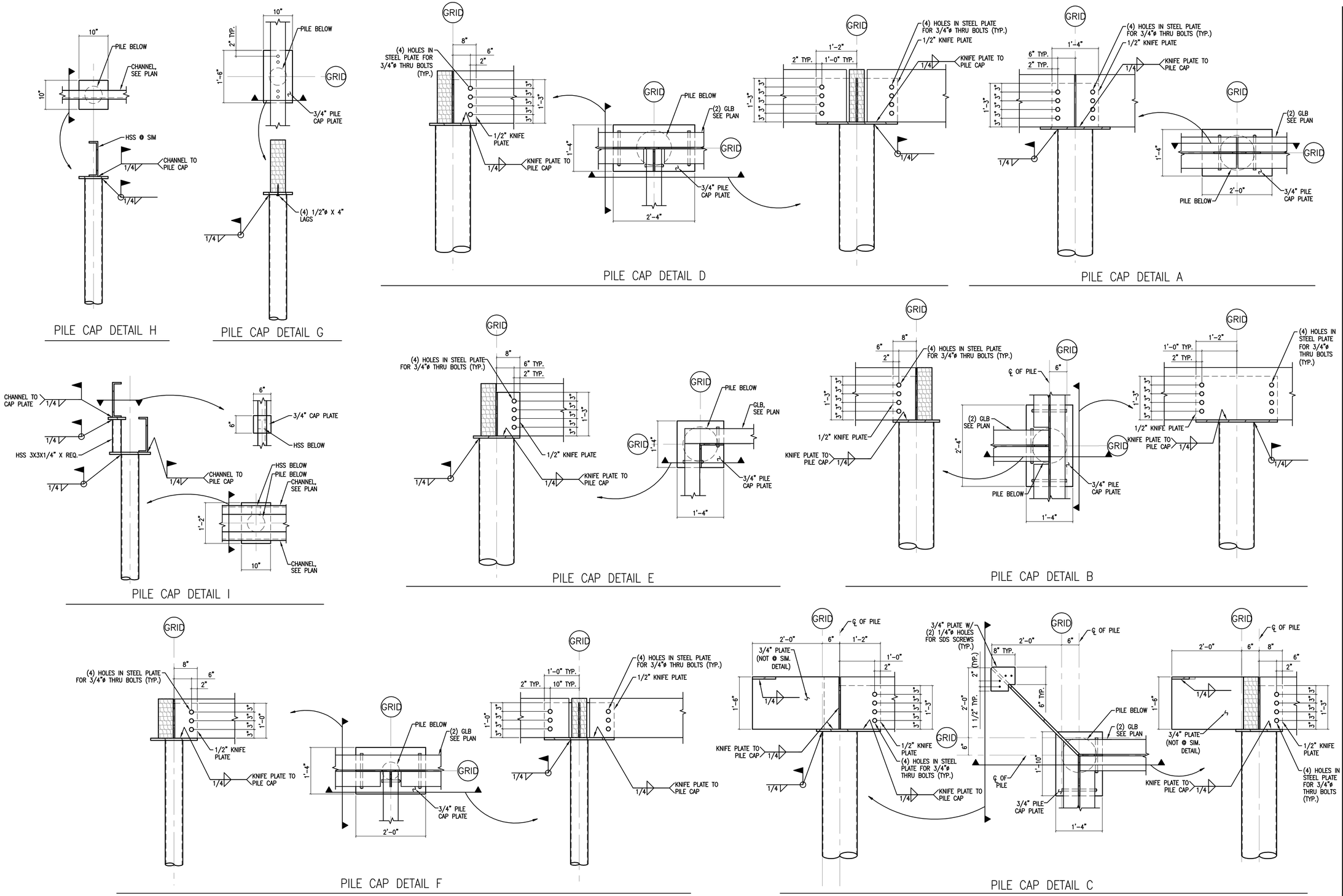

1 / S4.1 PILE CAP DETAIL

SCALE: 3/4" = 1'-0"

NOTE: ALL THRU-BOLTS TO BE 4" MINIMUM FROM END OF GLB

STATE OF ALASKA 49TH GREGORY A. LIEBL No. CE 9225 REGISTERED PROFESSIONAL ENGINEER

Date Stamped: 4-21-09

Date	Revision	By

USKH

Architecture • Engineering

Land Surveying • Planning

2515 'A' Street
Anchorage, Alaska 99503
(907) 276-4245

544 4th Avenue, Suite 102
Fairbanks, Alaska 99701
(907) 452-2128

3031 Clinton Drive
Suite 200
Juneau, Alaska 99801
(907) 790-2901

351 W Parks Hwy, Suite 200
Wasilla, Alaska 99654
(907) 376-7815

Project:

DOMESTIC VIOLENCE SHELTER

TUNDRA WOMEN'S COALITION

P.O. BOX 2029
250 6th AVENUE
BETHEL, ALASKA 99559

Project Mgr.	JC
Drawn	DJL
Checked	GAL
Date	21 APRIL 2009

Sheet Contents:

PILE CAP DETAILS

Sheet No.:

S4.1

USKH W.O. 1074400

DRAWING NAME: C:\Documents and Settings\Deanne\My Documents\drawings\uskh\1074400-Tundra Women's\1074400s41.dwg PLOTTED: Apr 21, 2009 - 10:24am

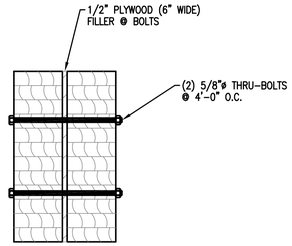

7 S4.2 TYPICAL DOUBLE GLB CONNECTION
SCALE: 1 1/2" = 1'-0"

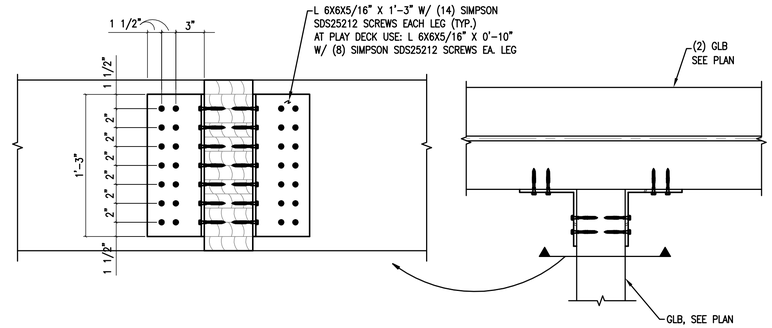

4 S4.2 PILE / FRAMING DETAIL
SCALE: 1 1/2" = 1'-0"

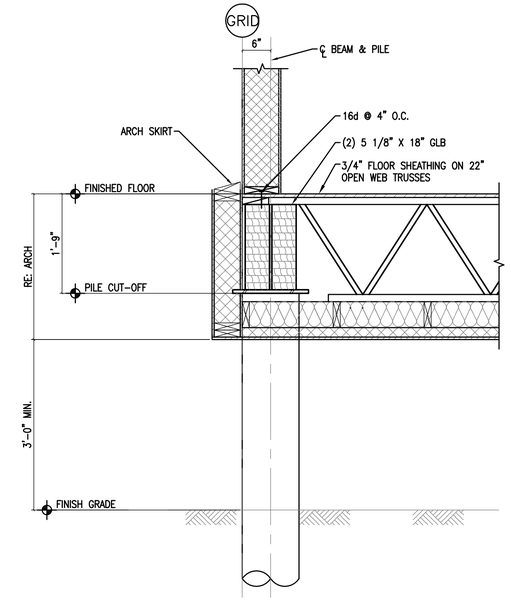

1 S4.2 PILE / FRAMING DETAIL
SCALE: 3/4" = 1'-0"

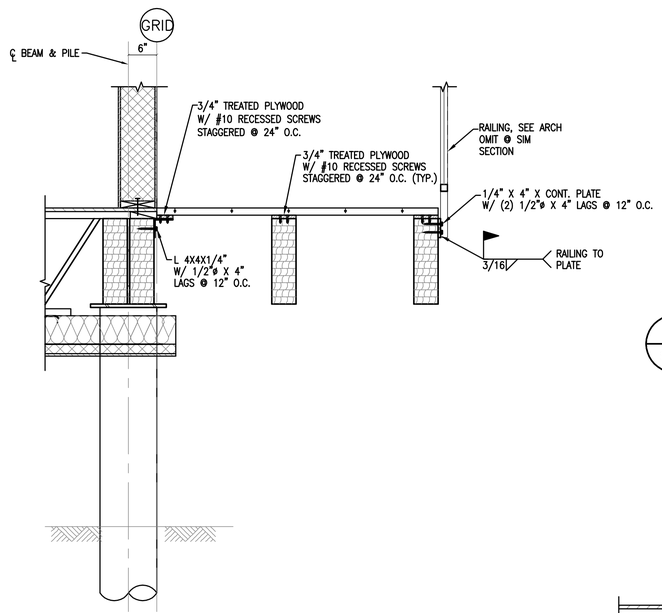

8 S4.2 PILE / FRAMING DETAIL
SCALE: 3/4" = 1'-0"

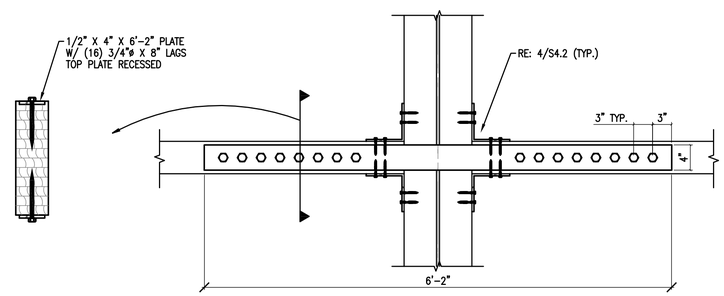

5 S4.2 PILE / FRAMING DETAIL
SCALE: 1" = 1'-0"

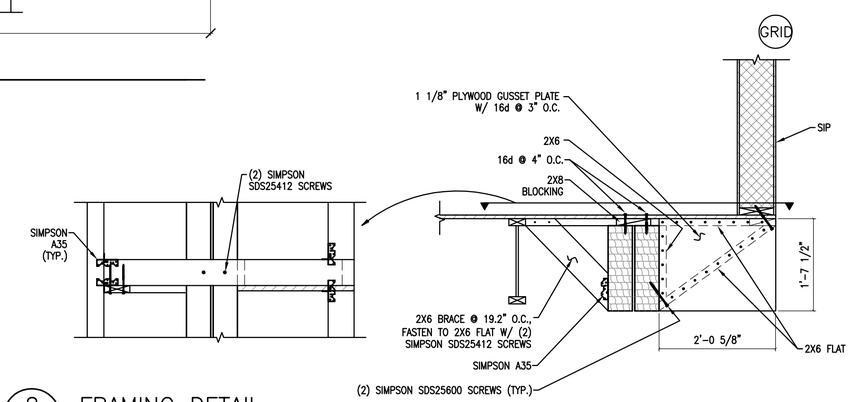

2 S4.2 FRAMING DETAIL
SCALE: 3/4" = 1'-0"

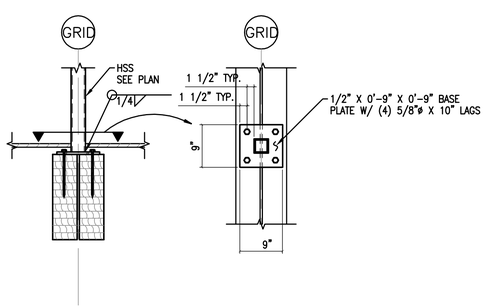

9 S4.2 PILE / FRAMING DETAIL
SCALE: 3/4" = 1'-0"

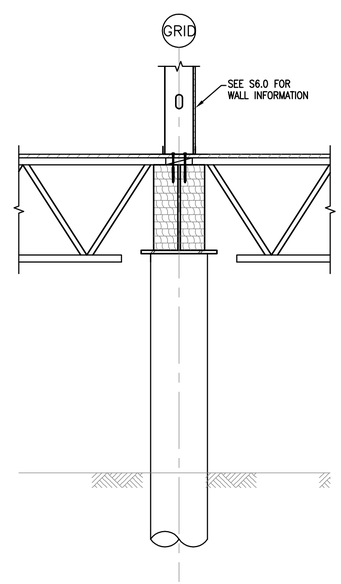

6 S4.2 PILE / FRAMING DETAIL
SCALE: 3/4" = 1'-0"

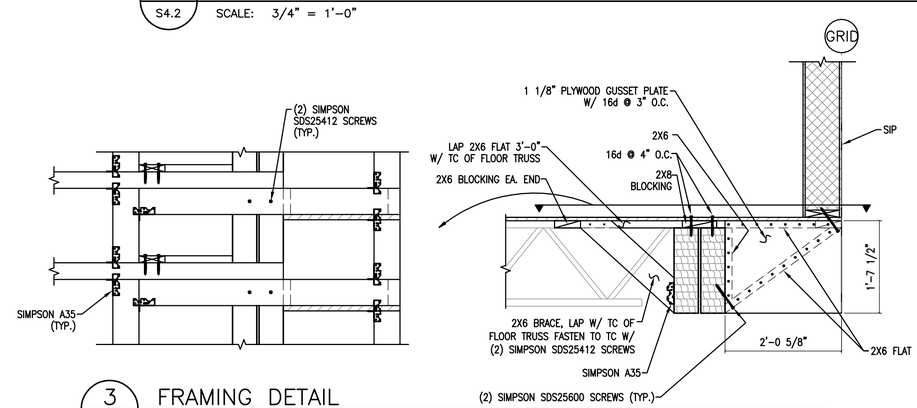

3 S4.2 FRAMING DETAIL
SCALE: 3/4" = 1'-0"

STATE OF ALASKA
49TH
GREGORY A. LIEBL
No. CE 9225
REGISTERED PROFESSIONAL ENGINEER

Date Stamped: 4-21-09

Date	Revision	By

USKH

Architecture • Engineering
Land Surveying • Planning

2515 'A' Street
Anchorage, Alaska 99503
(907) 276-4245

544 4th Avenue, Suite 102
Fairbanks, Alaska 99701
(907) 452-2128

3031 Clinton Drive
Suite 200
Juneau, Alaska 99801
(907) 790-2901

351 W Parks Hwy, Suite 200
Wasilla, Alaska 99654
(907) 376-7815

Project:
DOMESTIC VIOLENCE SHELTER

TUNDRA WOMEN'S COALITION
P.O. BOX 2029
250 6th AVENUE
BETHEL, ALASKA 99559

Project Mgr.	JC
Drawn	DJL
Checked	GAL
Date	21 APRIL 2009

Sheet Contents:
MAIN FLOOR FRAMING DETAILS

Sheet No.:
S4.2

USKH W.O. 1074400

DRAWING NAME: C:\Documents and Settings\Deanne\My Documents\drawings\uskh\1074400-Tundra Women's\1074400s42.dwg PLOTTED: Apr 21, 2009 - 10:24am

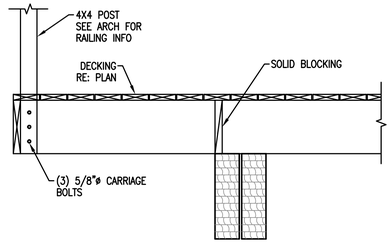

6 S4.3 FRAMING DETAIL
SCALE: 3/4" = 1'-0"

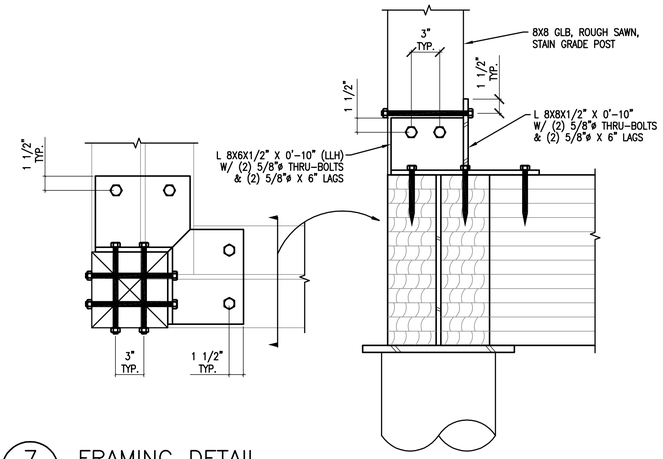

7 S4.3 FRAMING DETAIL
SCALE: 1 1/2" = 1'-0"

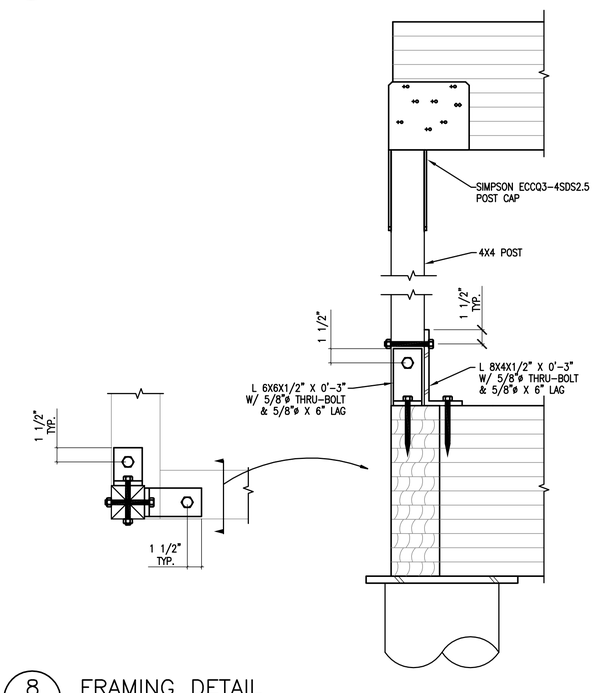

8 S4.3 FRAMING DETAIL
SCALE: 1 1/2" = 1'-0"

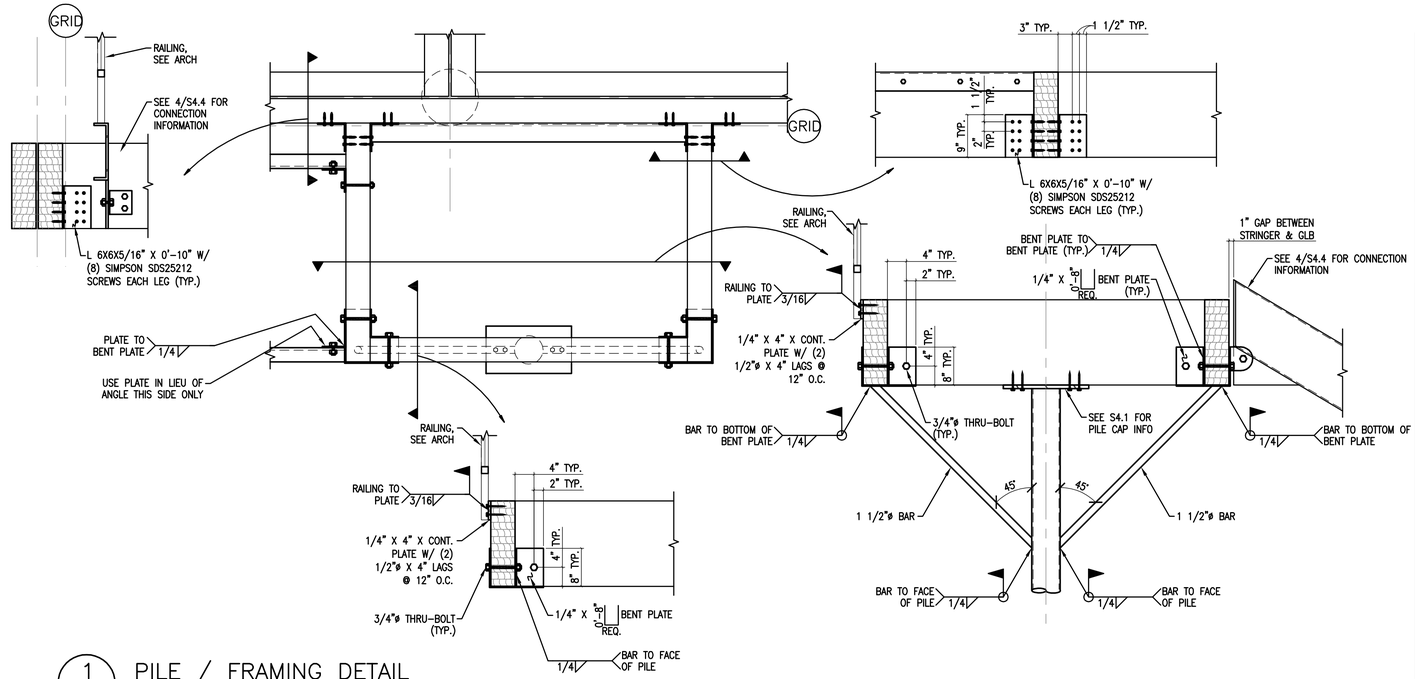

1 S4.3 PILE / FRAMING DETAIL
SCALE: 3/4" = 1'-0"

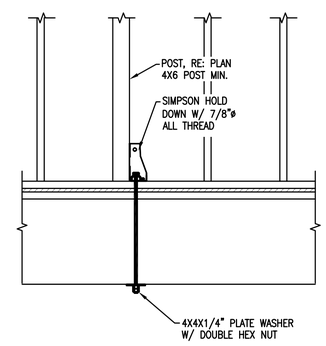

HOLD DOWN @ FRAME WALL

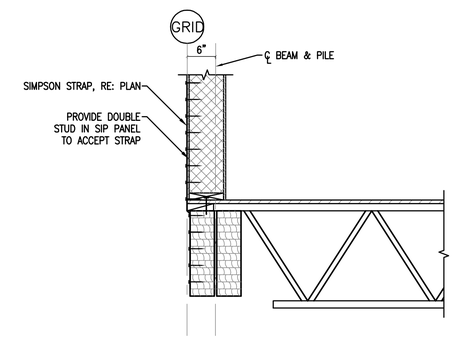

HOLD DOWN @ SIP

2 S4.3 HOLD DOWN DETAILS
SCALE: NTS

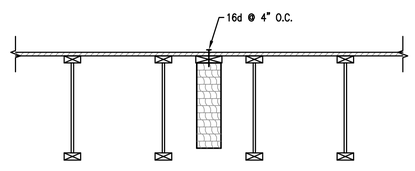

5 S4.3 FRAMING DETAIL
SCALE: 3/4" = 1'-0"

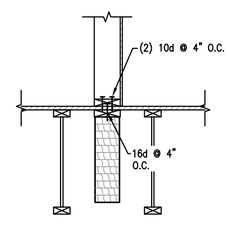

4 S4.3 FRAMING DETAIL
SCALE: 3/4" = 1'-0"

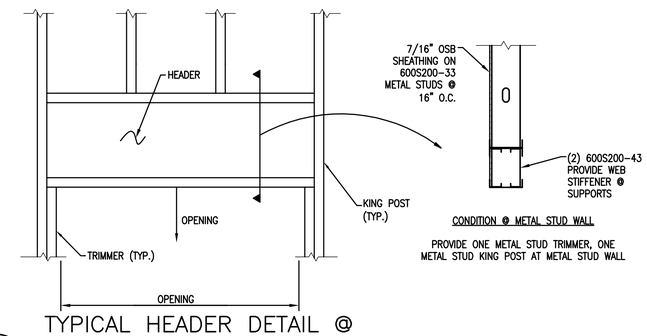

3 S4.3 TYPICAL HEADER DETAIL @ METAL STUD BEARING WALL
SCALE: 3/4" = 1'-0"

STATE OF ALASKA
49TH
GREGORY A. LIEBL
No. CE 9225
REGISTERED PROFESSIONAL ENGINEER

Date Stamped: 4-21-09

Date	Revision	By

USKH
Architecture • Engineering
Land Surveying • Planning

2515 'A' Street
Anchorage, Alaska 99503
(907) 276-4245

544 4th Avenue, Suite 102
Fairbanks, Alaska 99701
(907) 452-2128

3031 Clinton Drive
Suite 200
Juneau, Alaska 99801
(907) 790-2901

351 W Parks Hwy, Suite 200
Wasilla, Alaska 99654
(907) 376-7815

Project:
DOMESTIC VIOLENCE SHELTER

TUNDRA WOMEN'S COALITION
P.O. BOX 2029
250 6th AVENUE
BETHEL, ALASKA 99559

Project Mgr.	JC
Drawn	DJL
Checked	GAL
Date	21 APRIL 2009

Sheet Contents:
MAIN FLOOR FRAMING DETAILS

Sheet No.:
S4.3

USKH W.O. 1074400

DRAWING NAME: C:\Documents and Settings\Deanne\My Documents\drawings\uskh\1074400-Tundra Women's\1074400s43.dwg PLOTTED: Apr 21, 2009 - 10:24am

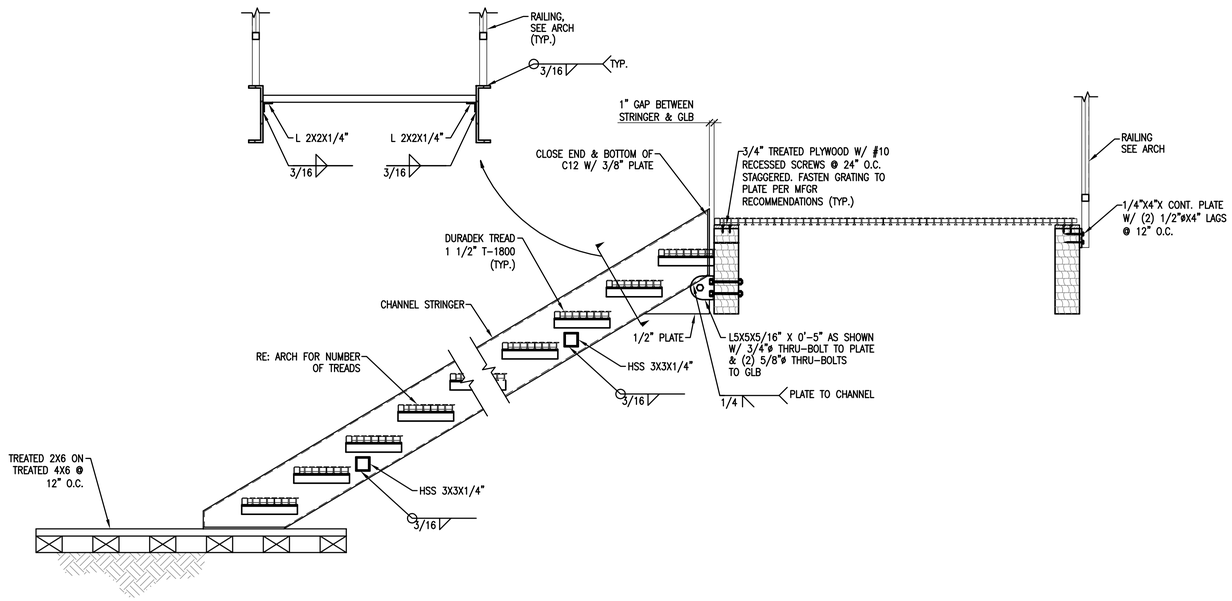

4 S4.4 FRAMING DETAIL
SCALE: 3/4" = 1'-0"

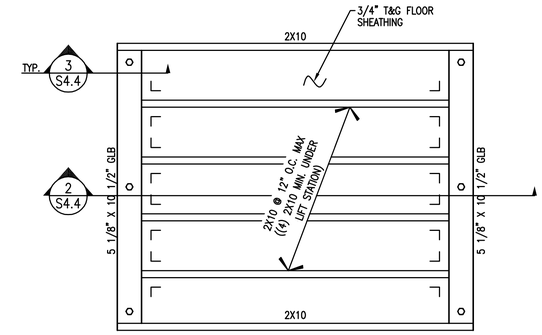

1 S4.4 LIFT STATION FRAMING PLAN
SCALE: 3/4" = 1'-0"

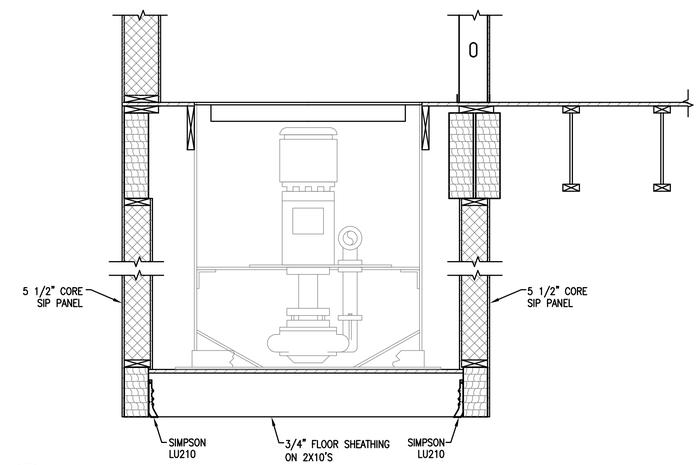

2 S4.4 LIFT STATION DETAIL
SCALE: 3/4" = 1'-0"

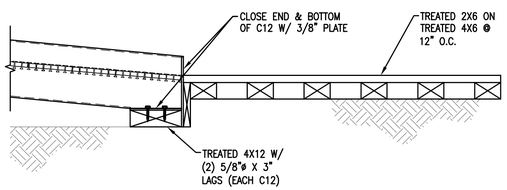

6 S4.4 FRAMING DETAIL
SCALE: 3/4" = 1'-0"

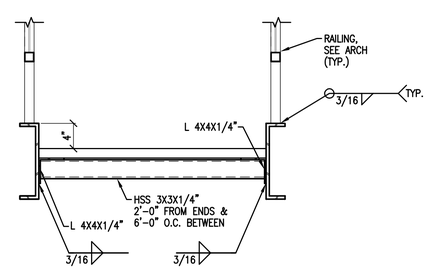

5 S4.4 FRAMING DETAIL
SCALE: 1" = 1'-0"

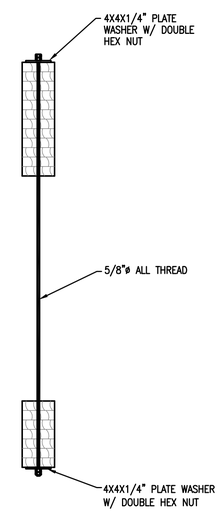

3 S4.4 LIFT STATION DETAIL
SCALE: 1" = 1'-0"

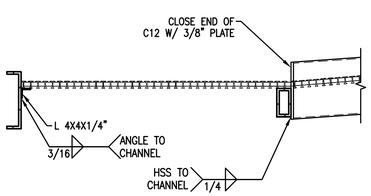

9 S4.4 FRAMING DETAIL
SCALE: 3/4" = 1'-0"

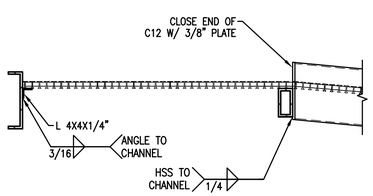

8 S4.4 FRAMING DETAIL
SCALE: 3/4" = 1'-0"

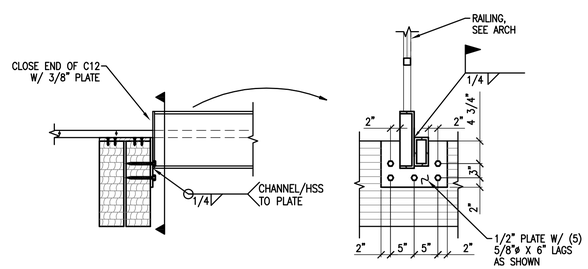

7 S4.4 FRAMING DETAIL
SCALE: 3/4" = 1'-0"

Date Stamped: 4-21-09

Date	Revision	By

USKH
Architecture • Engineering
Land Surveying • Planning

2515 'A' Street
Anchorage, Alaska 99503
(907) 276-4245

544 4th Avenue, Suite 102
Fairbanks, Alaska 99701
(907) 452-2128

3031 Clinton Drive
Suite 200
Juneau, Alaska 99801
(907) 790-2901

351 W Parks Hwy, Suite 200
Wasilla, Alaska 99654
(907) 376-7815

Project:
DOMESTIC VIOLENCE SHELTER

TUNDRA WOMEN'S COALITION
P.O. BOX 2029
250 6th AVENUE
BETHEL, ALASKA 99559

Project Mgr.	JC
Drawn	DJL
Checked	GAL
Date	21 APRIL 2009

Sheet Contents:
MAIN FLOOR FRAMING DETAILS

Sheet No.:
S4.4

USKH W.O. 1074400

DRAWING NAME: C:\Documents and Settings\Deanne\My Documents\drawings\uskh\1074400-Tundra Women's\1074400s44.dwg PLOTTED: Apr 21, 2009 - 10:25am

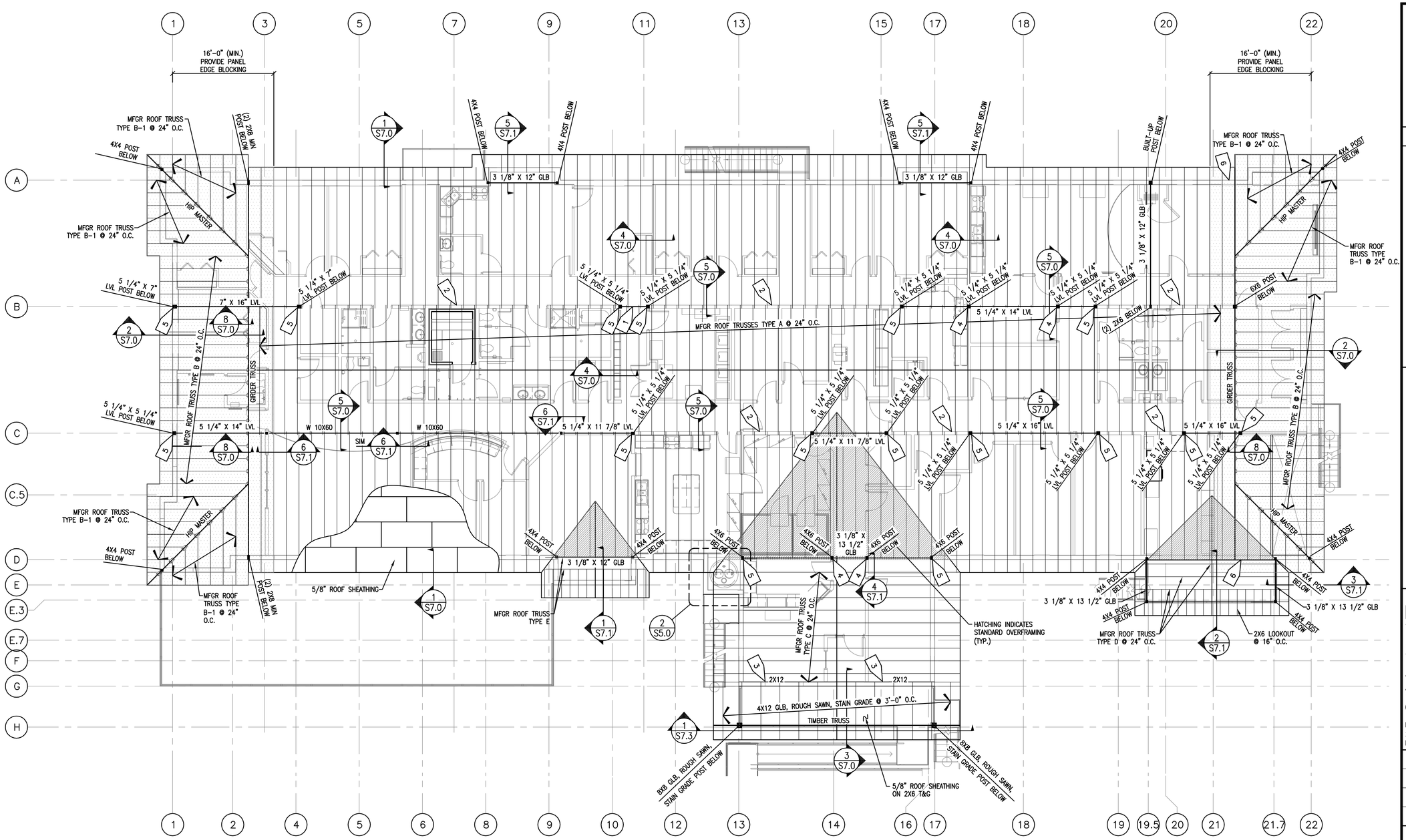

1 / S5.0 ROOF FRAMING PLAN

SCALE: 1/8" = 1'-0"

FRAMING PLAN NOTES:

1. TRUSS LAYOUT INDICATED IS DIAGRAMMATIC AND ACTUAL TRUSS LAYOUT MAY VARY AS REQUIRED BY TRUSS MANUFACTURER
2. RE: ARCH FOR EAVE FRAMING DIMENSIONS
3. ROOF CONSTRUCTION: 5/8" ROOF SHEATHING ON MFGR ROOF TRUSSES, FASTEN ROOF SHEATHING PANEL EDGES W/ 10d @ 6" O.C., FASTEN FIELD W/ 10d @ 12" O.C.
4. RE: S7.2 FOR TRUSS DESIGN LOADS
5. RE: 3/S4.3 FOR HEADER INFO

FRAMING PLAN KEY NOTES:

1. 5 1/4" X 9 1/4" LVL
2. TRUSS BLOCKING OVER SHEAR WALL, SEE DETAIL 5/S7.0
3. SECURE 4X12 TO 2X12 W/ (6) SDS25300
4. POST CAP DETAIL, RE: 6/S7.0
5. POST CAP DETAIL, RE: 7/S7.0
6. SIP MANUFACTURER TO DESIGN HEADER OVER DOOR/WINDOW FOR DOWNWARD FORCE OF 3600 POUNDS

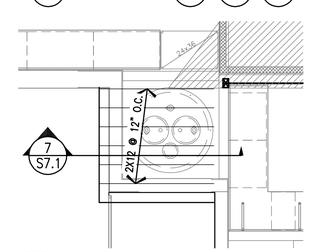

2 / S5.0 ROOF FRAMING PLAN

SCALE: 1/4" = 1'-0"

STATE OF ALASKA 49TH GREGORY A. LIEBL No. CE 9225 REGISTERED PROFESSIONAL ENGINEER

Date Stamped: 4-21-09

Date	Revision	By

USKH
Architecture • Engineering
Land Surveying • Planning

2515 'A' Street
Anchorage, Alaska 99503
(907) 276-4245

544 4th Avenue, Suite 102
Fairbanks, Alaska 99701
(907) 452-2128

3031 Clinton Drive
Suite 200
Juneau, Alaska 99801
(907) 790-2901

351 W Parks Hwy, Suite 200
Wasilla, Alaska 99654
(907) 376-7815

Project:
DOMESTIC VIOLENCE SHELTER

TUNDRA WOMEN'S COALITION
P.O. BOX 2029
250 6th AVENUE
BETHEL, ALASKA 99559

Project Mgr.	JC
Drawn	DJL
Checked	GAL
Date	21 APRIL 2009

Sheet Contents:
ROOF FRAMING PLAN

Sheet No.:
S5.0

USKH W.O. 1074400

DRAWING NAME: C:\Documents and Settings\Deanna\My Documents\drawings\uskh\1074400-Tundra Women's\1074400s50.dwg PLOTTED: Apr 21, 2009 - 10:25am

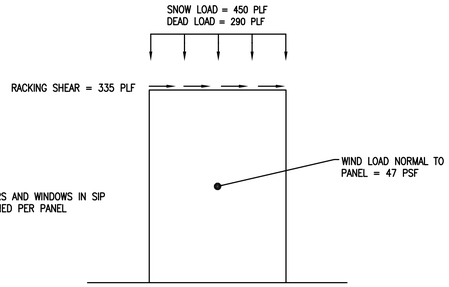

SIP WALL PANEL LOADS

NOTE:

HEADERS OVER DOORS AND WINDOWS IN SIP PANEL TO BE DESIGNED PER PANEL MANUFACTURER.

SHEAR WALL / BEARING WALL SCHEDULE – MAIN FLOOR

WALL	SHEAR	BEARING	FRAMING TYPE	SILL ANCHORAGE	SILL	SHEATHING REQUIREMENTS	HD REQ.
1	YES	YES	STRUCTURAL INSULATED PANEL WALL		2X SILL	REQUIRED PER SIP LOADS	RE: PLANS
2	YES	YES	600S200-33 @ 16" O.C.	SIMPSON SDS25600 @ 4" O.C., STAGGERED	TRACK MATCHING STUD GAUGE	7/16" OSB SHEATHING, FASTEN PANEL EDGES W/ #10 SCREWS @ 4" O.C., FASTEN FIELD W/ #10 SCREWS @ 12" O.C., BLOCK ALL PANEL EDGES. OPTION: AEROSMITH PIN FASTENERS (0.100"ø X 3/4") FASTEN PANEL EDGES @ 3" O.C., FASTEN FIELD @ 6" O.C.	RE: PLANS
3	YES	NO	2X6 @ 16" O.C.	SEE DETAIL 4/S4.3	2X6 SILL	7/16" OSB SHEATHING, FASTEN PANEL EDGES W/ 8d @ 3" O.C., FASTEN FIELD W/ 8d @ 12" O.C., BLOCK ALL PANEL EDGES.	RE: PLANS

PLAN NOTES:

1. HDA — INDICATES SIMPSON CMST14 STRAP, SEE DETAIL 2/S4.3
2. HDB — INDICATES SIMPSON HDU8-SDS2.5, SEE DETAIL 2/S4.3

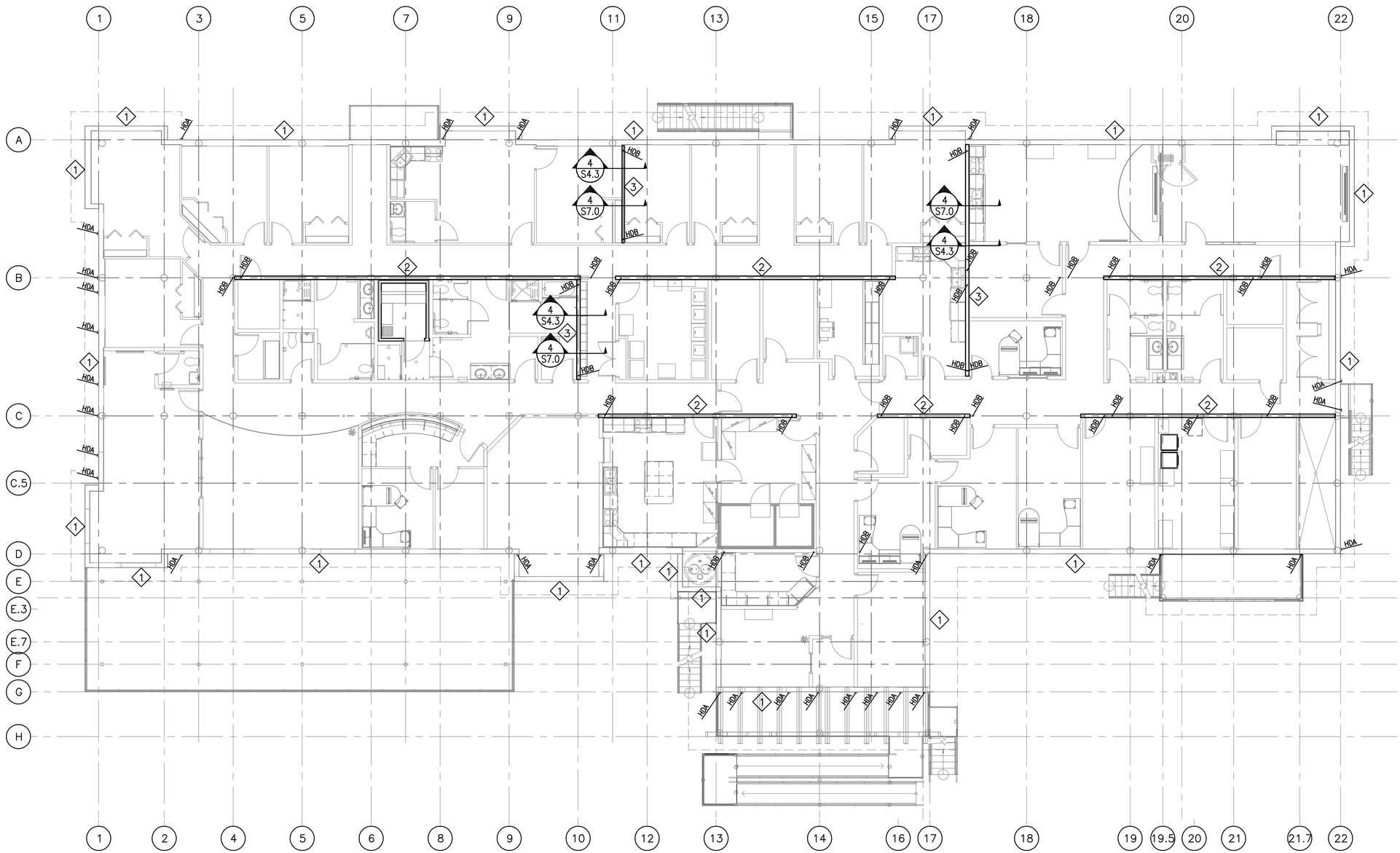

1 / S6.0 MAIN FLOOR SHEAR WALL / BEARING WALL PLAN

SCALE: 1/8" = 1'-0"

STATE OF ALASKA 49TH GREGORY A. LIEBL No. CE 9225 REGISTERED PROFESSIONAL ENGINEER

Date Stamped: 4-21-09

Date	Revision	By

USKH
Architecture • Engineering
Land Surveying • Planning

2515 'A' Street
Anchorage, Alaska 99503
(907) 276-4245

544 4th Avenue, Suite 102
Fairbanks, Alaska 99701
(907) 452-2128

3031 Clinton Drive
Suite 200
Juneau, Alaska 99801
(907) 790-2901

351 W Parks Hwy, Suite 200
Wasilla, Alaska 99654
(907) 376-7815

Project:

DOMESTIC VIOLENCE SHELTER

TUNDRA WOMEN'S COALITION

P.O. BOX 2029
250 6th AVENUE
BETHEL, ALASKA 99559

Project Mgr.	JC
Drawn	DJL
Checked	GAL
Date	21 APRIL 2009

Sheet Contents:

SHEAR WALL / BEARING WALL PLAN

Sheet No.:

S6.0

USKH W.O. 1074400

DRAWING NAME: C:\Documents and Settings\Deanne\My Documents\drawings\uskh\1074400-Tundra Women's\1074400s60.dwg PLOTTED: Apr 21, 2009 - 10:25am

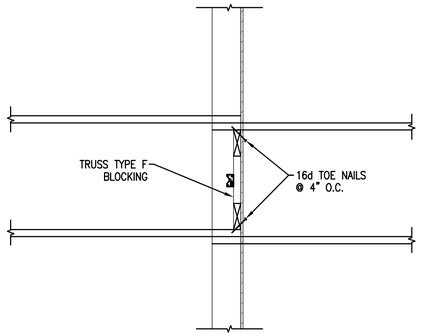

4A / S7.0 FRAMING DETAIL
SCALE: 3/4" = 1'-0"

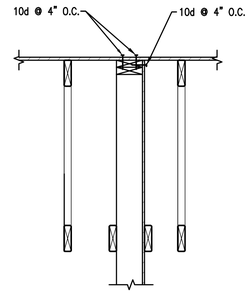

4 / S7.0 FRAMING DETAIL
SCALE: 3/4" = 1'-0"

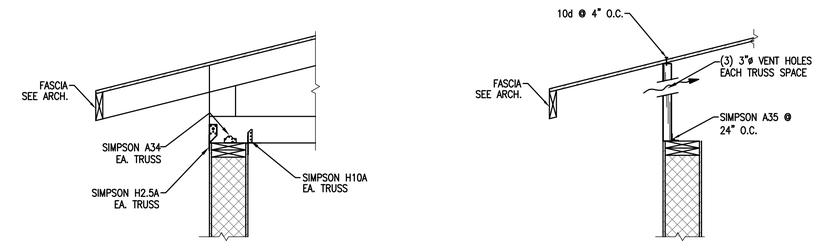

CONDITION AT ROOF TRUSSES

CONDITION BETWEEN ROOF TRUSSES

1 / S7.0 FRAMING DETAIL
SCALE: 3/4" = 1'-0"

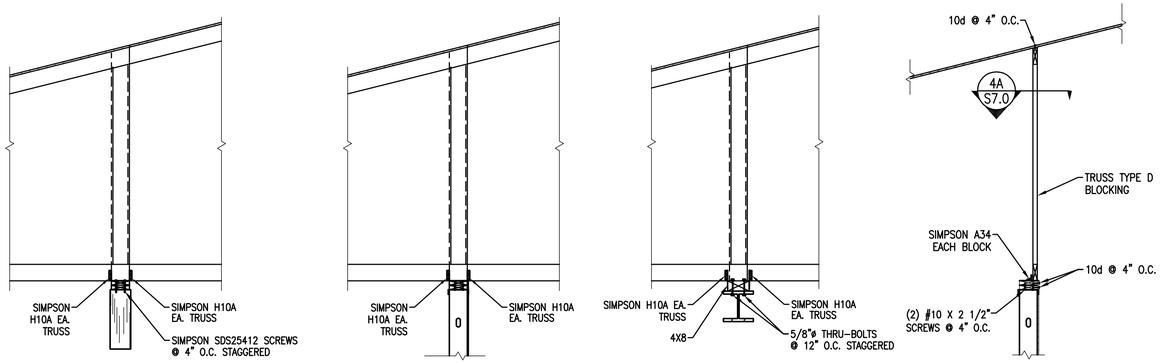

CONDITION AT ROOF TRUSSES (BEAM SHOWN)

CONDITION AT ROOF TRUSSES (WALL SHOWN)

CONDITION AT ROOF TRUSSES OVER WF BEAM

CONDITION BETWEEN ROOF TRUSSES OVER WALL

5 / S7.0 FRAMING DETAIL
SCALE: 3/4" = 1'-0"

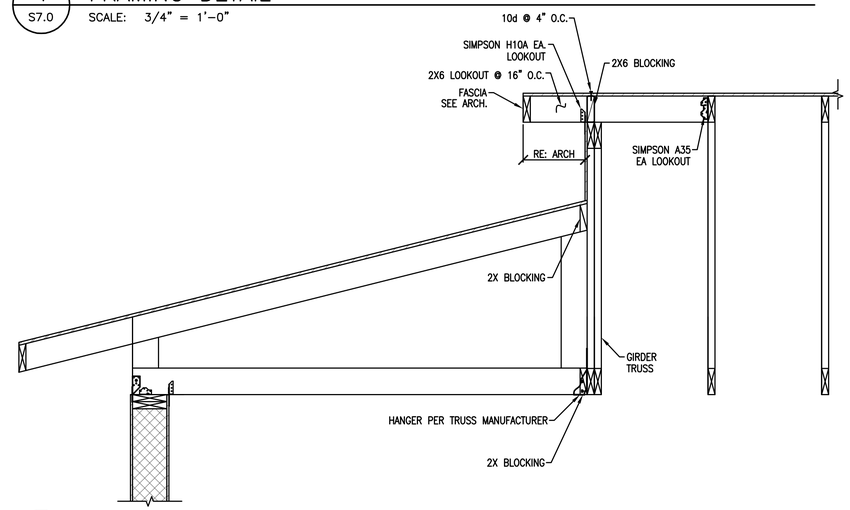

2 / S7.0 FRAMING DETAIL
SCALE: 3/4" = 1'-0"

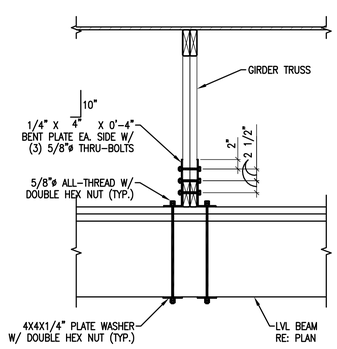

8 / S7.0 FRAMING DETAIL
SCALE: 3/4" = 1'-0"

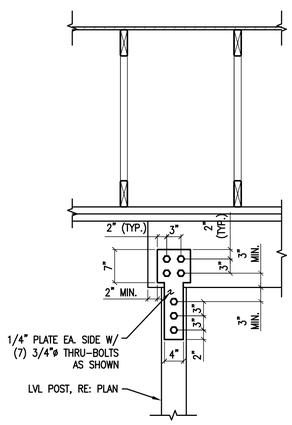

7 / S7.0 FRAMING DETAIL
SCALE: 3/4" = 1'-0"

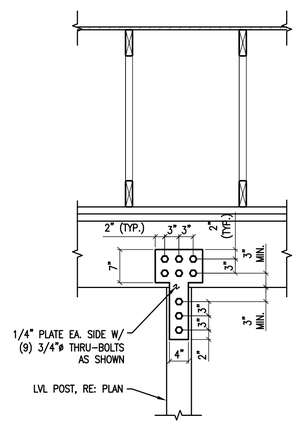

6 / S7.0 FRAMING DETAIL
SCALE: 3/4" = 1'-0"

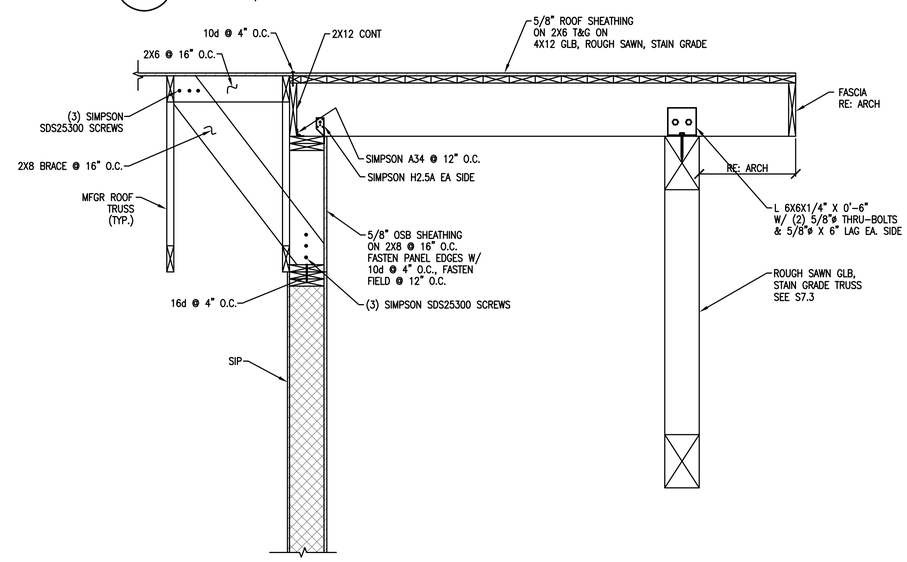

3 / S7.0 FRAMING DETAIL
SCALE: 3/4" = 1'-0"

STATE OF ALASKA
49TH
GREGORY A. LIEBL
No. CE 9225
REGISTERED PROFESSIONAL ENGINEER

Date Stamped: 4-21-09

Date	Revision	By

USKH
Architecture • Engineering
Land Surveying • Planning

2515 'A' Street
Anchorage, Alaska 99503
(907) 276-4245

544 4th Avenue, Suite 102
Fairbanks, Alaska 99701
(907) 452-2128

3031 Clinton Drive
Suite 200
Juneau, Alaska 99801
(907) 790-2901

351 W Parks Hwy, Suite 200
Wasilla, Alaska 99654
(907) 376-7815

Project:
DOMESTIC VIOLENCE SHELTER

TUNDRA WOMEN'S COALITION
P.O. BOX 2029
250 6th AVENUE
BETHEL, ALASKA 99559

Project Mgr.	JC
Drawn	DJL
Checked	GAL
Date	21 APRIL 2009

Sheet Contents:
ROOF FRAMING DETAILS

Sheet No.:
S7.0

USKH W.O. 1074400

DRAWING NAME: C:\Documents and Settings\Deanne\My Documents\drawings\uskh\1074400-Tundra Women's\1074400s70.dwg PLOTTED: Apr 21, 2009 - 10:26am

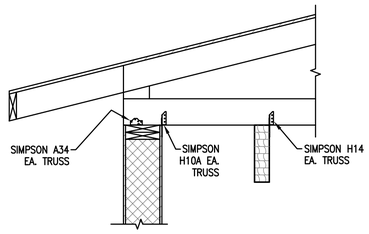

5 S7.1 FRAMING DETAIL
SCALE: 3/4" = 1'-0"

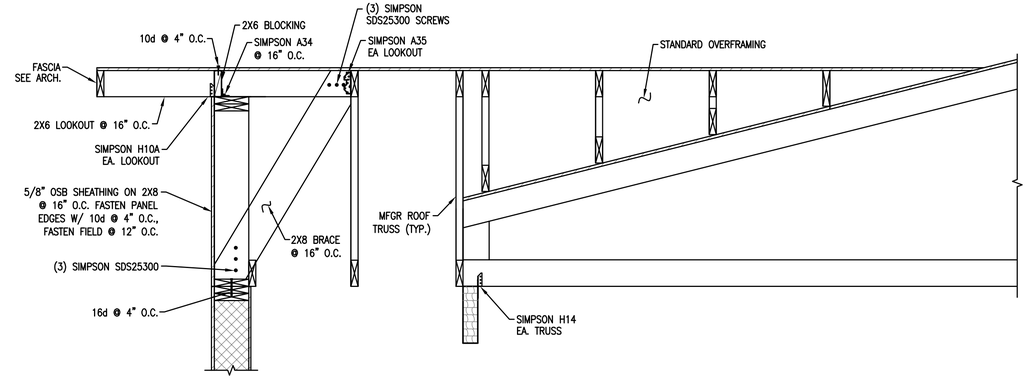

1 S7.1 FRAMING DETAIL
SCALE: 3/4" = 1'-0"

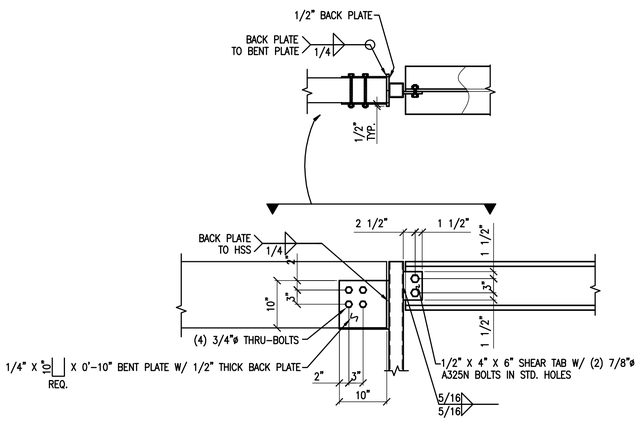

6 S7.1 FRAMING DETAIL
SCALE: 3/4" = 1'-0"

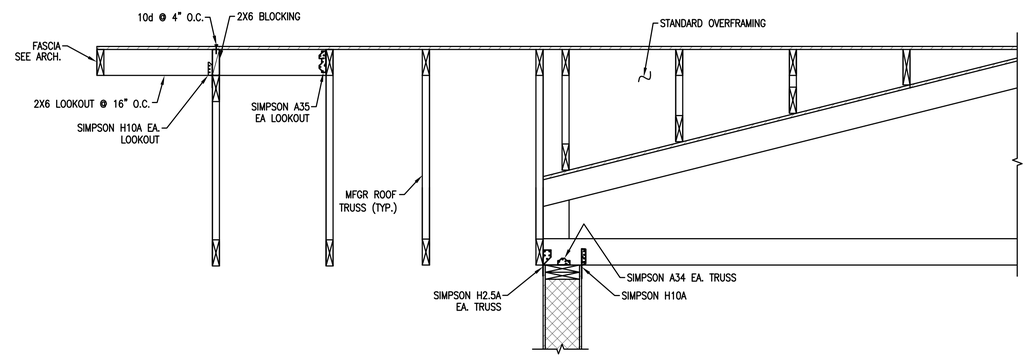

2 S7.1 FRAMING DETAIL
SCALE: 3/4" = 1'-0"

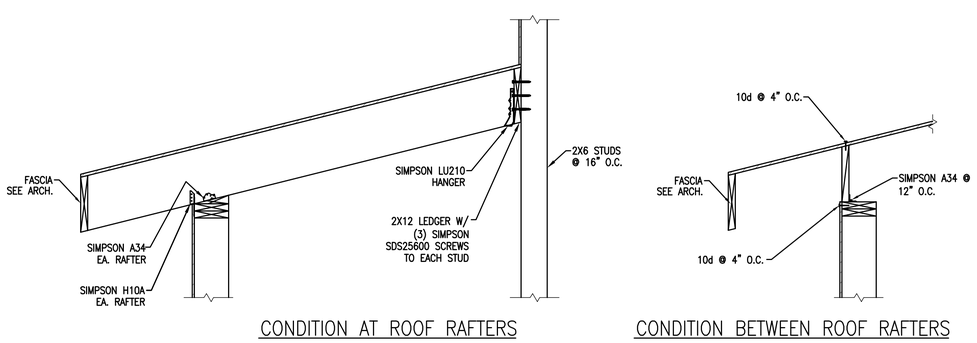

7 S7.1 FRAMING DETAIL
SCALE: 3/4" = 1'-0"

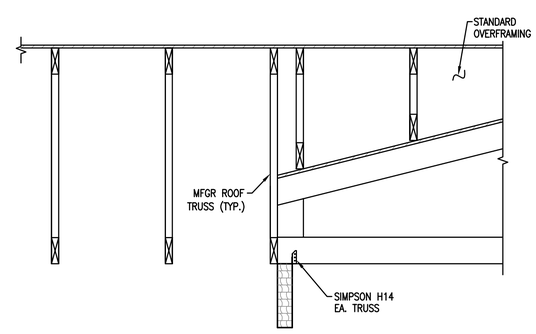

4 S7.1 FRAMING DETAIL
SCALE: 3/4" = 1'-0"

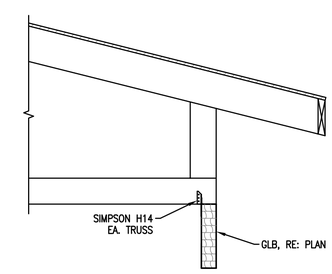

3 S7.1 FRAMING DETAIL
SCALE: 3/4" = 1'-0"

STATE OF ALASKA
49TH
GREGORY A. LIEBL
No. CE 9225
REGISTERED PROFESSIONAL ENGINEER

Date Stamped: 4-21-09

Date	Revision	By

USKH

Architecture • Engineering
Land Surveying • Planning

2515 'A' Street
Anchorage, Alaska 99503
(907) 276-4245

544 4th Avenue, Suite 102
Fairbanks, Alaska 99701
(907) 452-2128

3031 Clinton Drive
Suite 200
Juneau, Alaska 99801
(907) 790-2901

351 W Parks Hwy, Suite 200
Wasilla, Alaska 99654
(907) 376-7815

Project:
DOMESTIC VIOLENCE SHELTER

TUNDRA WOMEN'S COALITION
P.O. BOX 2029
250 6th AVENUE
BETHEL, ALASKA 99559

Project Mgr.	JC
Drawn	DJL
Checked	GAL
Date	21 APRIL 2009

Sheet Contents:
ROOF FRAMING DETAILS

Sheet No.:
S7.1

USKH W.O. 1074400

DRAWING NAME: C:\Documents and Settings\Deanne\My Documents\drawings\uskh\1074400-Tundra Women's\1074400s71.dwg PLOTTED: Apr 21, 2009 - 10:26am

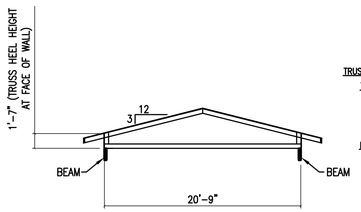

TRUSS DESIGN LOADS:
TOP CHORD
SNOW LOAD..... 31 PSF (FLAT ROOF SNOW LOAD)
DEAD LOAD..... 7 PSF
NET WIND UPLIFT..... 62 PSF
BOTTOM CHORD
DEAD LOAD..... 13 PSF

ROOF TRUSS TYPE D

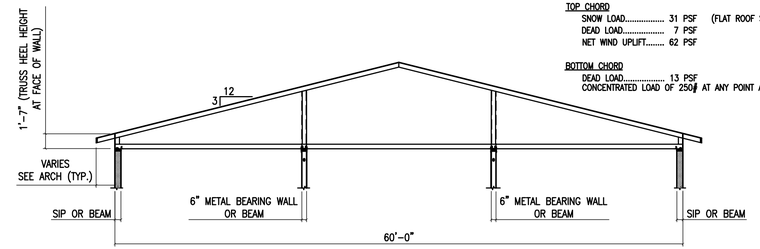

TRUSS DESIGN LOADS:
TOP CHORD
SNOW LOAD..... 31 PSF (FLAT ROOF SNOW LOAD)
DEAD LOAD..... 7 PSF
NET WIND UPLIFT..... 62 PSF
BOTTOM CHORD
DEAD LOAD..... 13 PSF
CONCENTRATED LOAD OF 250# AT ANY POINT ALONG BOTTOM CHORD

ROOF TRUSS TYPE A

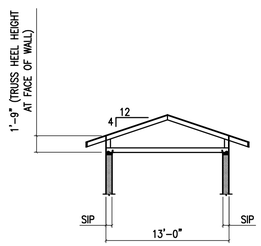

TRUSS DESIGN LOADS:
TOP CHORD
SNOW LOAD..... 31 PSF (FLAT ROOF SNOW LOAD)
DEAD LOAD..... 7 PSF
NET WIND UPLIFT..... 62 PSF
BOTTOM CHORD
DEAD LOAD..... 13 PSF

ROOF TRUSS TYPE E

TRUSS DESIGN LOADS:
TOP CHORD
SNOW LOAD..... 31 PSF (FLAT ROOF SNOW LOAD)
DEAD LOAD..... 7 PSF
NET WIND UPLIFT..... 62 PSF
BOTTOM CHORD
DEAD LOAD..... 13 PSF

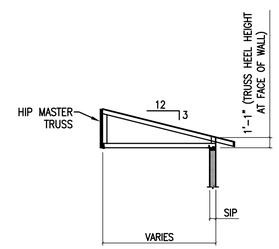

ROOF TRUSS TYPE B-1

TRUSS DESIGN LOADS:
TOP CHORD
SNOW LOAD..... 31 PSF (FLAT ROOF SNOW LOAD)
DEAD LOAD..... 7 PSF
NET WIND UPLIFT..... 62 PSF
BOTTOM CHORD
DEAD LOAD..... 13 PSF

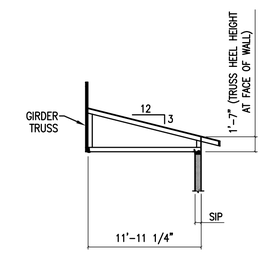

ROOF TRUSS TYPE B

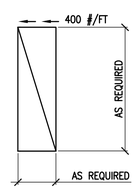

TRUSS BLOCKING TYPE F

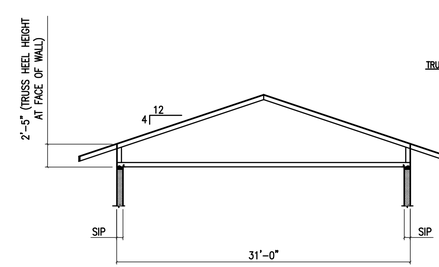

TRUSS DESIGN LOADS:
TOP CHORD
SNOW LOAD..... 31 PSF (FLAT ROOF SNOW LOAD)
DEAD LOAD..... 7 PSF
NET WIND UPLIFT..... 62 PSF
BOTTOM CHORD
DEAD LOAD..... 13 PSF

ROOF TRUSS TYPE C

1 / S7.2 TRUSS DIAGRAMS

SCALE: NTS

MANUFACTURED TRUSS NOTES:

1. VERIFY ALL DIMENSIONS AND PROFILES OF TRUSSES WITH ARCH DRAWINGS.
2. TRUSS MANUFACTURER TO CONSIDER LOAD COMBINATIONS PER 2006 IBC
3. TRUSS MANUFACTURER TO CONSIDER UNBALANCED SNOW LOAD PER 2006 IBC.
4. TRUSS MANUFACTURER TO DESIGN & SUPPLY ALL TRUSS HANGERS.

Date Stamped: 4-21-09

Date	Revision	By

USKH
Architecture • Engineering
Land Surveying • Planning

2515 'A' Street
Anchorage, Alaska 99503
(907) 276-4245

544 4th Avenue, Suite 102
Fairbanks, Alaska 99701
(907) 452-2128

3031 Clinton Drive
Suite 200
Juneau, Alaska 99801
(907) 790-2901

351 W Parks Hwy, Suite 200
Wasilla, Alaska 99654
(907) 376-7815

Project:
DOMESTIC VIOLENCE SHELTER

TUNDRA WOMEN'S COALITION
P.O. BOX 2029
250 6th AVENUE
BETHEL, ALASKA 99559

Project Mgr.	JC	
Drawn	DJL	
Checked	GAL	
Date	21 APRIL 2009	

Sheet Contents:
MANUFACTURED TRUSS DIAGRAMS

Sheet No.:
S7.2

USKH W.O. 1074400

DRAWING NAME: C:\Documents and Settings\Deanne\My Documents\drawings\uskh\1074400-Tundra Women's\1074400s72.dwg PLOTTED: Apr 21, 2009 - 10:26am

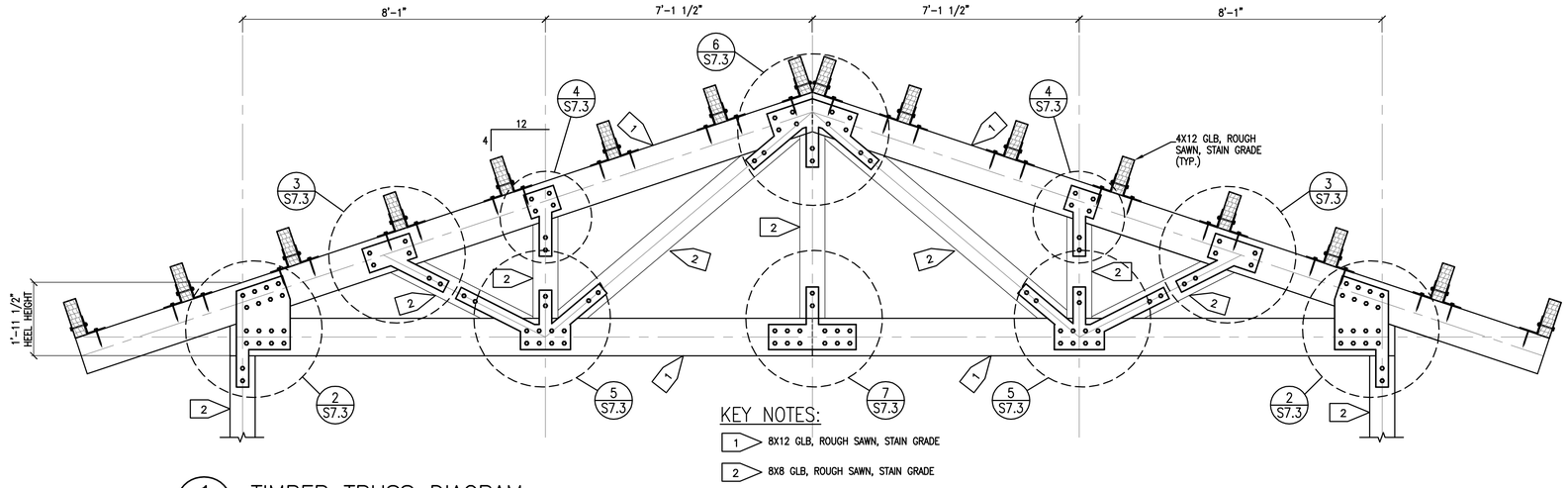

1 S7.3 TIMBER TRUSS DIAGRAM
SCALE: 1/2" = 1'-0"

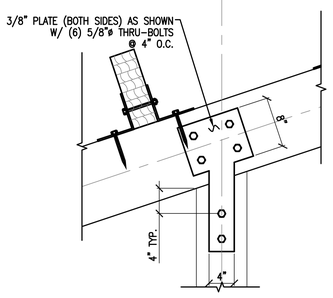

4 S7.3 DETAIL
SCALE: 1" = 1'-0"

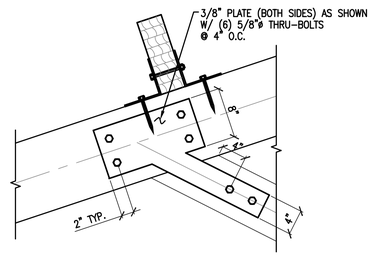

3 S7.3 DETAIL
SCALE: 1" = 1'-0"

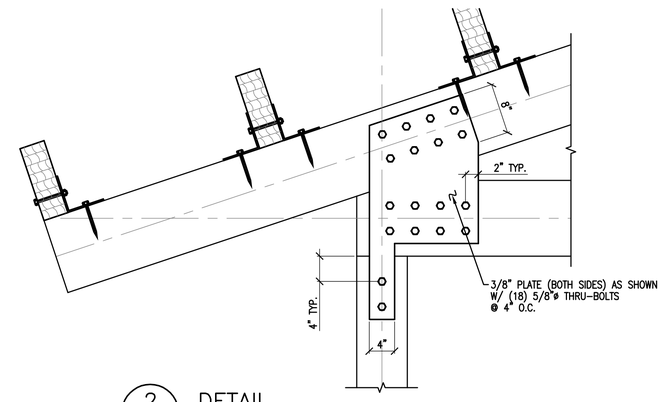

2 S7.3 DETAIL
SCALE: 1" = 1'-0"

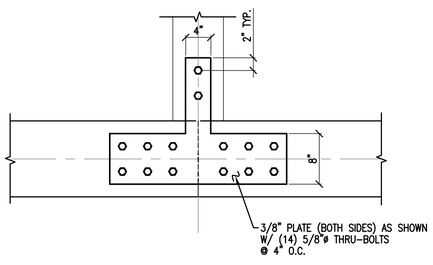

7 S7.3 DETAIL
SCALE: 1" = 1'-0"

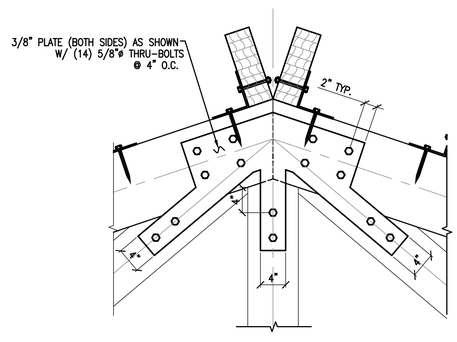

6 S7.3 DETAIL
SCALE: 1" = 1'-0"

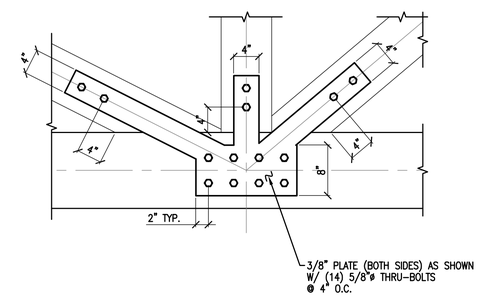

5 S7.3 DETAIL
SCALE: 1" = 1'-0"

DRAWING NAME: C:\Documents and Settings\Deanne\My Documents\drawings\uskh\1074400-Tundra Women's\1074400s73.dwg PLOTTED: Apr 21, 2009 - 10:26am

STATE OF ALASKA 49TH GREGORY A. LIEBL No. CE 9225 REGISTERED PROFESSIONAL ENGINEER

Date Stamped: 4-21-09

Date	Revision	By

USKH

Architecture • Engineering
Land Surveying • Planning

2515 'A' Street
Anchorage, Alaska 99503
(907) 276-4245

544 4th Avenue, Suite 102
Fairbanks, Alaska 99701
(907) 452-2128

3031 Clinton Drive
Suite 200
Juneau, Alaska 99801
(907) 790-2901

351 W Parks Hwy, Suite 200
Wasilla, Alaska 99654
(907) 376-7815

Project:
DOMESTIC VIOLENCE SHELTER

TUNDRA WOMEN'S COALITION
P.O. BOX 2029
250 6th AVENUE
BETHEL, ALASKA 99559

Project Mgr.	JC
Drawn	DJL
Checked	GAL
Date	21 APRIL 2009

Sheet Contents:
TIMBER TRUSS DETAILS

Sheet No.:
S7.3

USKH W.O. 1074400

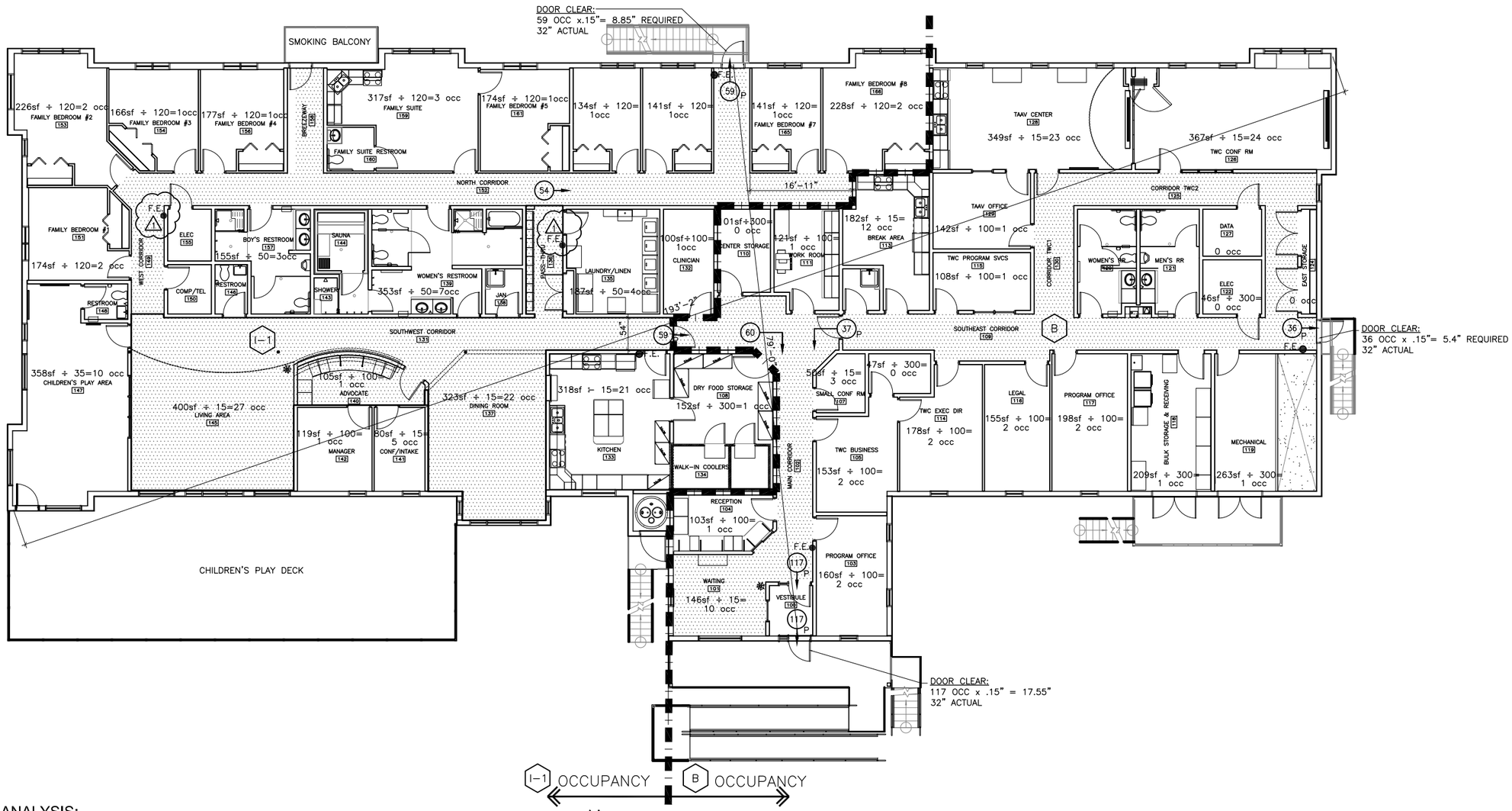

1 A1.1 FIRE CODE ANALYSIS FLOOR PLAN

SCALE: 1/8"=1'-0"

FIRE CODE ANALYSIS:

2006 INTERNATIONAL BUILDING CODE (IBC)

PROJECT DESCRIPTION: A 1 STORY STRUCTURE WITH HALF OF IT A DOMESTIC VIOLENCE SHELTER (I-1) AND THE OTHER HALF OFFICES (B) FOR TUNDRA WOMEN'S COALITION. NEW SHELTER IS 11,135 SF.

CONSTRUCTION TYPE: TYPE V-B, SPRINKLERED, NFPA-13

OCCUPANCY/USES: B & I-1
NON-SEPARATED USE ALLOWED PER SECTION 508.3.2; BUILDING CLASSIFIED AS I-1 OCCUPANCY IS THE MOST STRINGENT.

MAXIMUM BUILDING HEIGHT: PER IBC TABLE 503: 2 STORIES ALLOWED; ACTUAL IS 1 STORY. PROPOSED FUTURE ADDITION IS 2 STORIES.

ALLOWABLE AREA, SECTION 506:
BASIC ALLOWABLE AREA PER IBC TABLE 503: 4,500 SF AND 2 STORIES
SPRINKLER INCREASE PER SECTION 506.3: 200% DUE TO FUTURE SECOND STORY EXPANSION
INCREASED ALLOWABLE AREA: 4,500 SF X 2 = 9000 SF
INCREASE FOR FRONTAGE SETBACK ON 2 SIDES: If=(F/P-.25)W/30
= 405/465-.25=.62
0.62 X 4,500 SF = 2,790 SF

TOTAL ALLOWABLE FIRST FLR AREA: = 4,500 + 2,790 + 9,000 = 16,290 SF

ACTUAL = 11,135 SF; AREA IS OKAY FOR TYPE V-B
PROPOSED FUTURE ADDITION (SEE C2.0) = 5,155 SF + 11,135 SF = 16,290 SF THEREFORE BUILDING IS IN COMPLIANCE.

TOTAL ALLOWABLE SECOND FLR AREA PER SECTION 506.4: = 16,290 x 2 STORIES = 32,580 SF

FIRE SEPARATION: IBC SECTION 508.3.2; NO SEPARATION IS REQUIRED
TABLE 508.2 INCIDENTAL USE AREAS: FOR STORAGE ROOMS OVER 100 SF; NO RATING REQUIRED DUE TO FIRE EXTINGUISHING SYSTEM

NUMBER OF OCCUPANTS (TABLE 1004.1.1):
BUSINESS(B): 93 OCC
INSTITUTIONAL (I-1): 119 OCC
TOTAL GROUND FLOOR OCCUPANCY: 93 + 119= 212 OCCUPANTS

EXITING SYSTEMS:
2 EXITS REQUIRED, 3 PROVIDED ALL LEADING DIRECTLY TO OUTSIDE
EXIT TRAVEL DISTANCE: NO GREATER THAN 250 FEET FOR INSTITUTIONAL (MOST STRINGENT) PER IBC TABLE 1016.1
CORRIDOR FIRE RESISTANCE RATING: 1 HOUR REQUIRED PER IBC TABLE 1017.1

SECTION 1015.2.1 2 EXITS:
"WHERE 2 EXISTS ARE REQUIRED FROM ANY PORTION OF THE EXIT ACCESS, THE EXIT DOORS SHALL BE PLACED A DISTANCE APART EQUAL TO NOT LESS THAN ONE-HALF OF THE LENGTH OF THE MAXIMUM OVERALL DIAGONAL DIMENSION OF THE BUILDING."
EXCEPTIONS: 1.WHERE EXIT ENCLOSURES ARE PROVIDED AS A PORTION OF THE REQUIRED EXIT AND ARE INTERCONNECTED BY A 1-HOUR FIRE RESISTANCE CORRIDOR.....THE REQUIRED EXIT SEPARATION SHALL BE MEASURED ALONG THE SHORTEST DIRECT LINE OF TRAVEL.
2. WHERE A BUILDING IS EQUIPPED THROUGHOUT WITH AN AUTOMATIC SPRINKLER SYSTEM.....THE SEPARATION DISTANCE OF THE EXIT DOORS SHALL NOT BE LESS THAN ONE-THIRD OF THE LENGTH OF THE MAXIMUM OVERALL DIAGONAL."

ONE-THIRD OF DIAGONAL IS 64'-3" AND WE ARE AT 79'-0" THEREFOR IN COMPLIANCE.

MAXIMUM DEADEND:
20 FEET PER IBC SECTION 1017.3, ACTUAL IS 16'-11" AT NORTH CORRIDOR 152

MAXIMUM EXIT ACCESS TRAVEL DISTANCE:
250 FEET PER IBC TABLE 1016.1 (I-1 GOVERNS)

TABLE 602 FIRE RESISTANCE RATING FOR EXTERIOR WALLS BASED ON DISTANCE: 0

CORRIDOR FIRE-RESISTANCE RATING PER TABLE 1017.1:
B OCCUPANCY WITH SPRINKLER SYSTEM - 0
I-1 OCCUPANCY WITH SPRINKLER SYSTEM - 1 HOUR

LEGEND

CORRIDOR FIRE RESISTANCE RATING: SEC 1017.1
1 HOUR RATED CORRIDORS W/ 20 MINUTE DOORS
GA FILE NO: WP 3520

XX P — OCCUPANTS THROUGH DOOR - PANIC HARDWARE REQUIRED

XX — OCCUPANTS AND DIRECTION OF TRAVEL

X — OCCUPANCY GROUP - PER IBC CHAPTER 3

F.E. — FIRE EXTINGUISHER AND RECESSED CABINET

NOTE:
FOR SMOKE DETECTOR LOCATIONS SEE SHEET E4.1.
FOR WALL ASSEMBLIES SEE SHEET A2.7.

CHANGE OF OCCUPANCY

STATE OF ALASKA 49TH
Gerald V. Neubert
No. A-4047
REGISTERED PROFESSIONAL ARCHITECT

Date Stamped: 04/21/09

Date	Revision	By
5/11/09	FIRE MARSHAL REVIEW COMMENTS	JC

USKH
Architecture • Engineering
Land Surveying • Planning

2515 'A' Street
Anchorage, Alaska 99503
(907) 276-4245

544 4th Avenue, Suite 102
Fairbanks, Alaska 99701
(907) 452-2128

3031 Clinton Drive
Suite 200
Juneau, Alaska 99801
(907) 790-2901

351 W Parks Hwy, Suite 200
Wasilla, Alaska 99654
(907) 376-7815

Project:
DOMESTIC VIOLENCE SHELTER

TUNDRA WOMEN'S COALITION
P.O. BOX 2029
250 6th AVENUE
BETHEL, ALASKA 99559

Project Mgr.	JC	
Drawn	JC	
Checked		
Date	21 APRIL 2009	

Sheet Contents:
FIRE CODE ANALYSIS

Sheet No.:
A1.1

USKH W.O. 1074400

DRAWING NAME: I:\1074400\Dwgs\A\sheets\1074400-A1_1.dwg PLOTTED: May 12, 2009 - 4:21pm

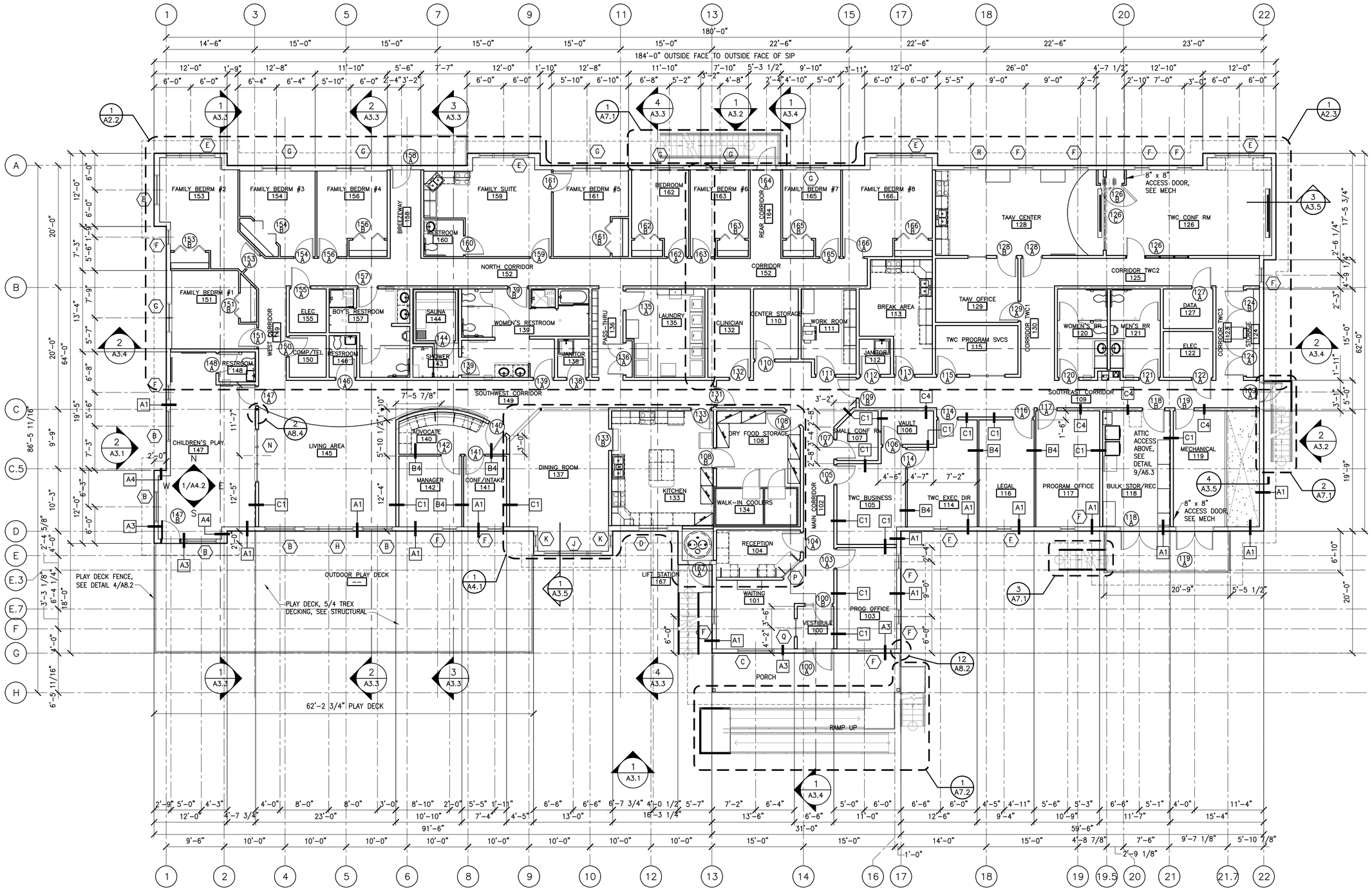

N

1 A2.1 OVERALL FLOOR PLAN

SCALE: 1/8"=1'-0"

DRAWING NAME: I:\1074400\Dwgs\A\sheets\1074400-A2_1.dwg PLOTTED: Apr 21, 2009 - 11:39am

STATE OF ALASKA 49TH Gerald V. Neubert No. A-4047 REGISTERED PROFESSIONAL ARCHITECT

Date Stamped: 04/21/09

Date	Revision	By

USKH

Architecture • Engineering

Land Surveying • Planning

2515 'A' Street
Anchorage, Alaska 99503
(907) 276-4245

544 4th Avenue, Suite 102
Fairbanks, Alaska 99701
(907) 452-2128

3031 Clinton Drive
Suite 200
Juneau, Alaska 99801
(907) 790-2901

351 W Parks Hwy, Suite 200
Wasilla, Alaska 99654
(907) 376-7815

Project:

DOMESTIC VIOLENCE SHELTER

TUNDRA WOMEN'S COALITION

P.O. BOX 2029
250 6th AVENUE
BETHEL, ALASKA 99559

Project Mgr.	JC
Drawn	MAB
Checked	
Date	21 APRIL 2009

Sheet Contents:

OVERALL FLOOR PLAN

Sheet No.:

A2.1

USKH W.O. 1074400

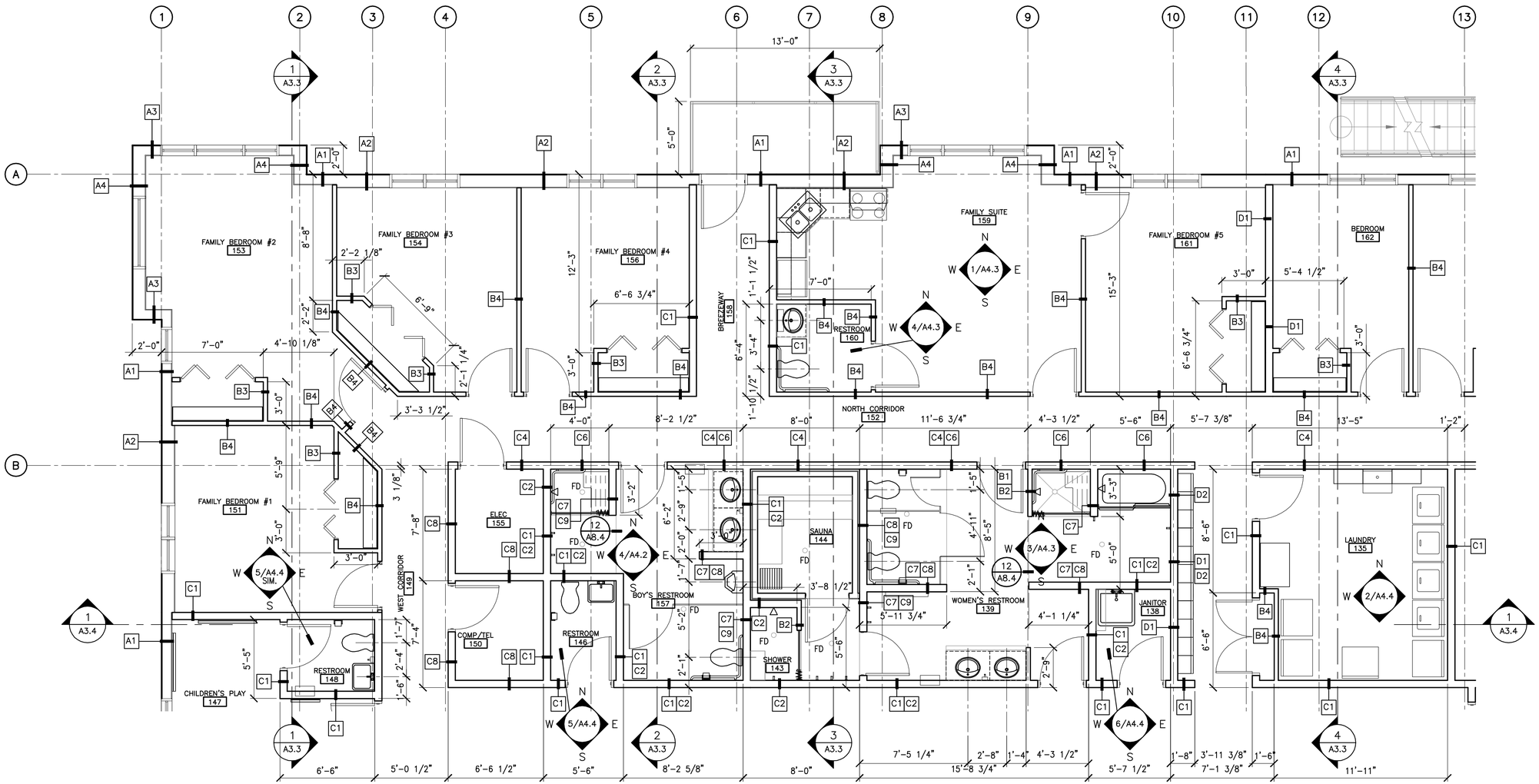

N

1 A2.2 ENLARGED FLOOR PLAN – AREA A

SCALE: 1/4"=1'-0"

STATE OF ALASKA 49TH
Gerald V. Neubert
No. A-4047
REGISTERED PROFESSIONAL ARCHITECT

Date Stamped: 04/21/09

Date	Revision	By

USKH

Architecture • Engineering
Land Surveying • Planning

2515 'A' Street
Anchorage, Alaska 99503
(907) 276-4245

544 4th Avenue, Suite 102
Fairbanks, Alaska 99701
(907) 452-2128

3031 Clinton Drive
Suite 200
Juneau, Alaska 99801
(907) 790-2901

351 W Parks Hwy, Suite 200
Wasilla, Alaska 99654
(907) 376-7815

Project:

DOMESTIC VIOLENCE SHELTER

TUNDRA WOMEN'S COALITION
P.O. BOX 2029
250 6th AVENUE
BETHEL, ALASKA 99559

Project Mgr.	JC
Drawn	MAB
Checked	
Date	21 APRIL 2009

Sheet Contents:
ENLARGED FLOOR PLAN – LIVING AREA A

Sheet No.:
A2.2

USKH W.O. 1074400

DRAWING NAME: I:\1074400\Dwgs\A\sheets\1074400-A2_2.dwg PLOTTED: Apr 21, 2009 – 11:17am

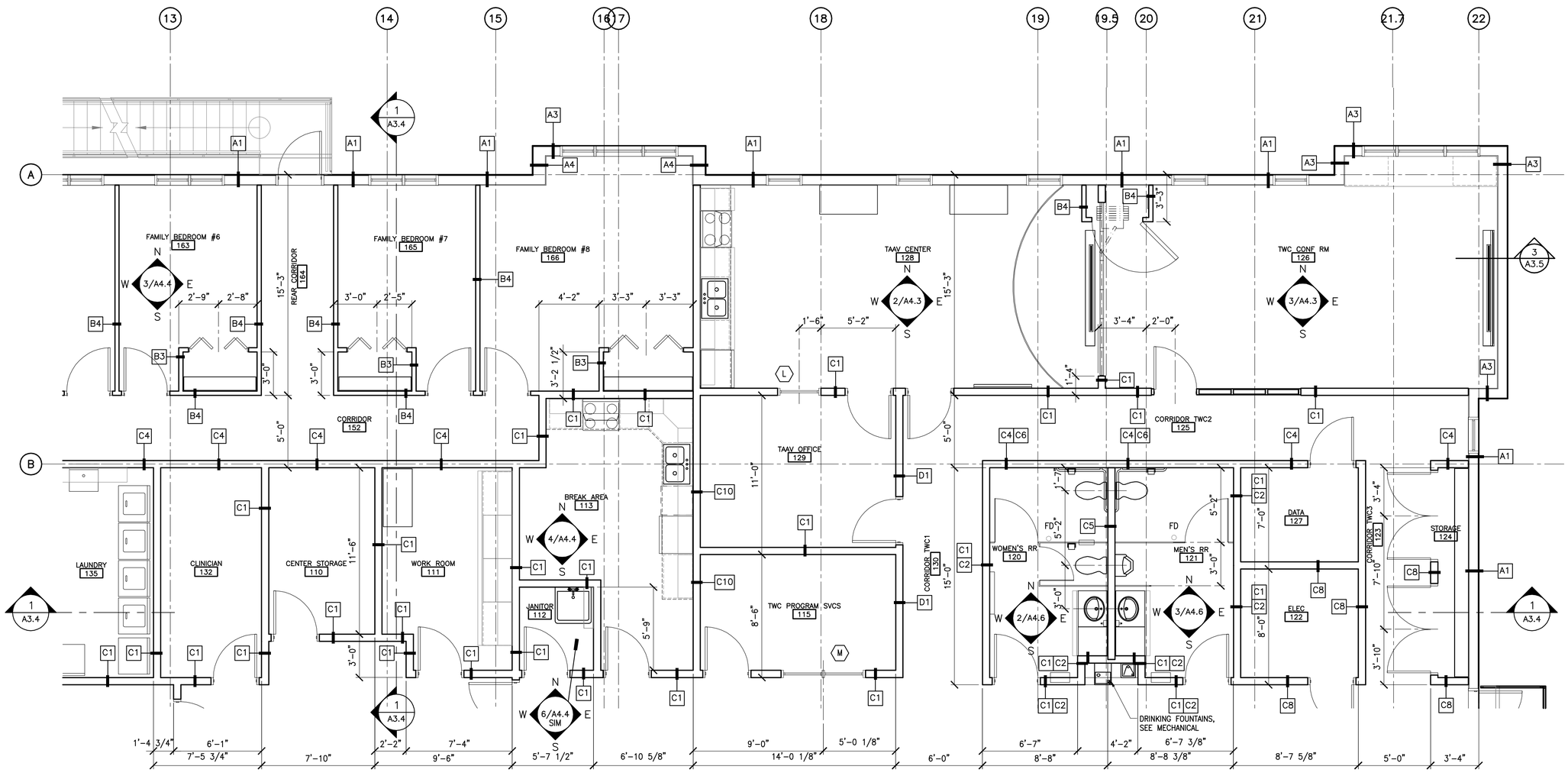

N

1 A2.3 ENLARGED FLOOR PLAN – AREA B

SCALE: 1/4"=1'-0"

DRAWING NAME: I:\1074400\Dwgs\A\sheets\1074400-A2_3.dwg PLOTTED: Apr 21, 2009 – 11:19am

STATE OF ALASKA 49TH Gerald V. Neubert No. A-4047 REGISTERED PROFESSIONAL ARCHITECT

Date Stamped: 04/21/09

Date	Revision	By

USKH

Architecture • Engineering

Land Surveying • Planning

2515 'A' Street
Anchorage, Alaska 99503
(907) 276-4245

544 4th Avenue, Suite 102
Fairbanks, Alaska 99701
(907) 452-2128

3031 Clinton Drive
Suite 200
Juneau, Alaska 99801
(907) 790-2901

351 W Parks Hwy, Suite 200
Wasilla, Alaska 99654
(907) 376-7815

Project:

DOMESTIC VIOLENCE SHELTER

TUNDRA WOMEN'S COALITION

P.O. BOX 2029
250 6th AVENUE
BETHEL, ALASKA 99559

Project Mgr.	JC
Drawn	MAB
Checked	
Date	21 APRIL 2009

Sheet Contents:

ENLARGED FLOOR PLAN – LIVING AREA B

Sheet No.:

A2.3

USKH W.O. 1074400

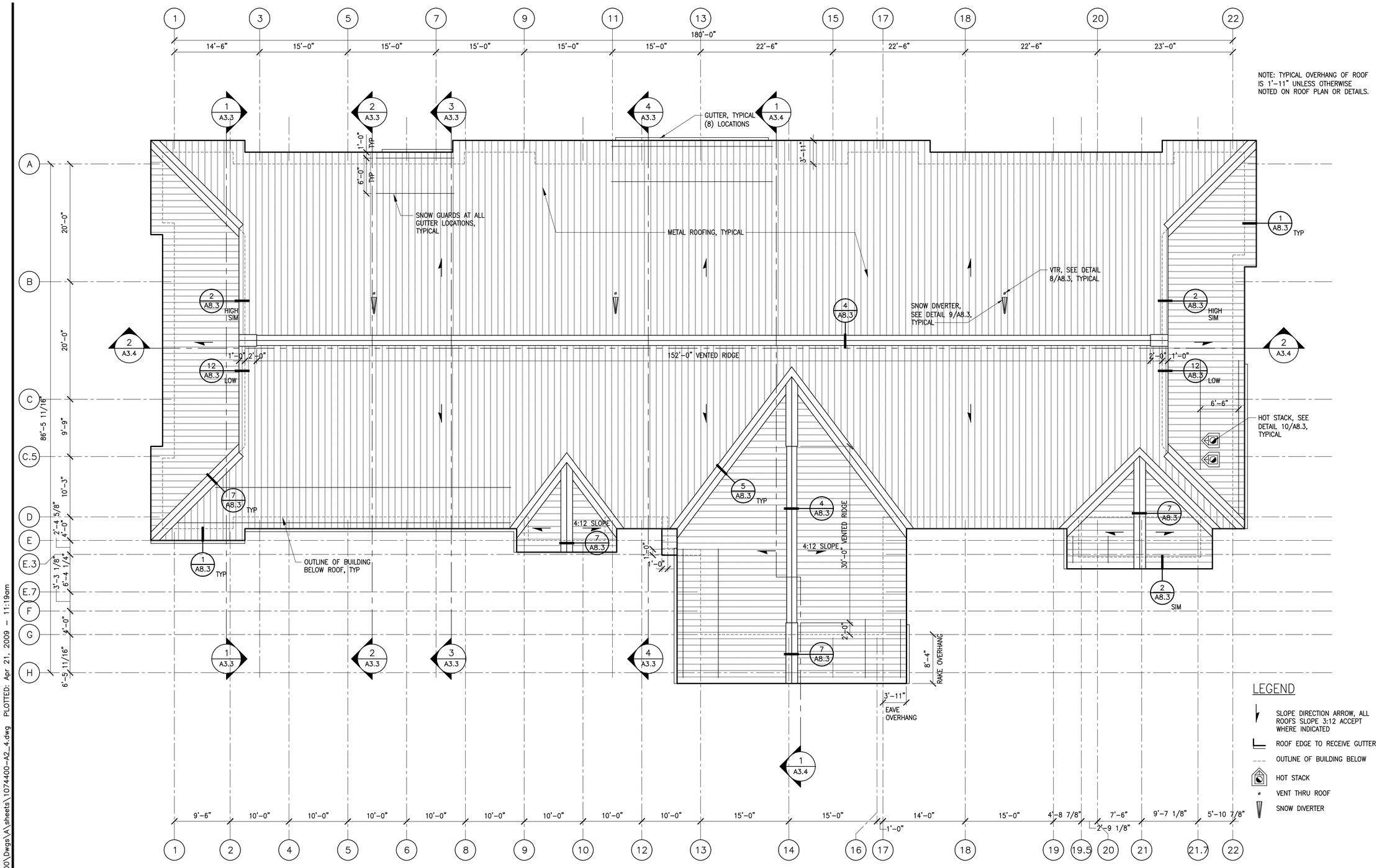

N

1 A2.4 ROOF PLAN

SCALE: 1/8"=1'-0"

STATE OF ALASKA 49TH Gerald V. Neubert No. A-4047 REGISTERED PROFESSIONAL ARCHITECT

Date Stamped: 04/21/09

Date	Revision	By

USKH

Architecture • Engineering

Land Surveying • Planning

2515 'A' Street
Anchorage, Alaska 99503
(907) 276-4245

544 4th Avenue, Suite 102
Fairbanks, Alaska 99701
(907) 452-2128

3031 Clinton Drive
Suite 200
Juneau, Alaska 99801
(907) 790-2901

351 W Parks Hwy, Suite 200
Wasilla, Alaska 99654
(907) 376-7815

Project:

DOMESTIC VIOLENCE SHELTER

TUNDRA WOMEN'S COALITION

P.O. BOX 2029
250 6th AVENUE
BETHEL, ALASKA 99559

Project Mgr.	JC
Drawn	MAB
Checked	
Date	21 APRIL 2009

Sheet Contents:

ROOF PLAN

Sheet No.:

A2.4

USKH W.O. 1074400

DRAWING NAME: I:\1074400\Dwgs\A\sheets\1074400-A2_4.dwg PLOTTED: Apr 21, 2009 - 11:19am

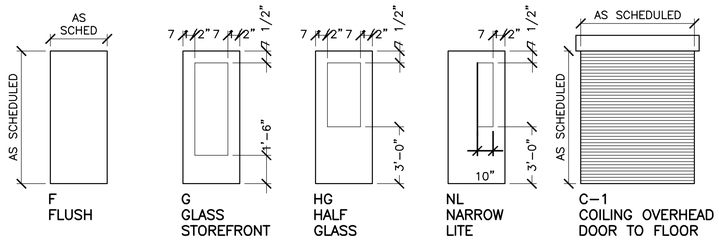

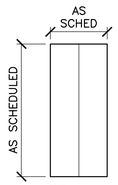

DOOR TYPES

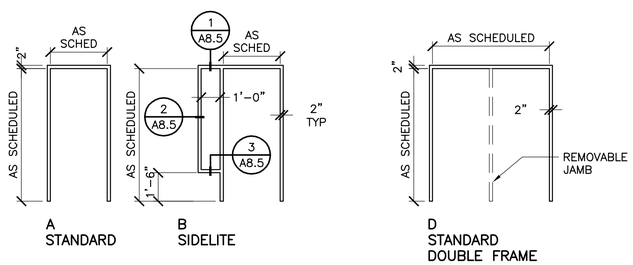

FRAME TYPES

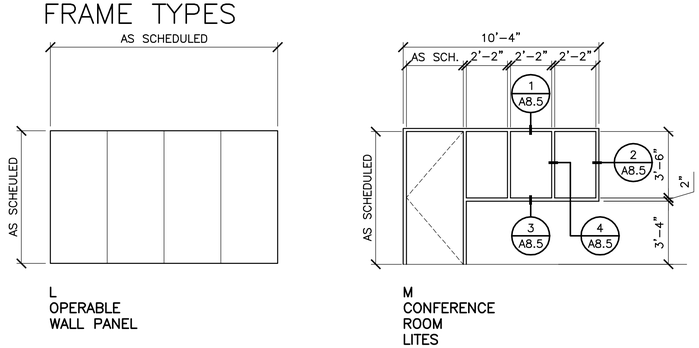

DOOR AND FRAME SCHEDULE

NUMBER	DOOR SIZE Door Size–PR WxH	DOOR TYPE	DOOR MATERIAL	FRAME DETAIL HEAD	FRAME DETAIL JAMB	FRAME DETAIL SILL	FRAME TYPE	FRAME MATERIAL	HARDWARE	FIRE RATING	REMARKS	NUMBER
100A	3'-0"x7'-0"	G	IHM	1/A8.7	2/A8.7	3/A8.7	B	IHM	HW-1	–	PACK FRAME W/ BATT INSUL	100A
100B	3'-0"x7'-0"	G	HM	5/A8.5	6&7/A8.5	–	B	HM	HW-2	20 MIN.		100B
103A	3'-0"x7'-0"	NL	WD	5/A8.5	6&7/A8.5	–	A	HM	HW-3	20 MIN.		103A
104A	3'-0"x7'-0"	NL	WD	5/A8.5	6&7/A8.5	–	A	HM	HW-3	20 MIN.		104A
105A	3'-0"x7'-0"	NL	WD	5/A8.5	6&7/A8.5	–	A	HM	HW-3	20 MIN.		105A
106A	3'-0"x7'-0"	F	HM	5/A8.5	6&7/A8.5	8/A8.5	A	HM	HW-4	–		106A
107A	3'-0"x7'-0"	NL	WD	5/A8.5	6&7/A8.5	–	A	HM	HW-3	20 MIN.		107A
108A	3'-0"x7'-0"	F	WD	5/A8.5	6&7/A8.5	8/A8.5	A	HM	HW-5	20 MIN.		108A
108B	3'-0"x7'-0"	F	WD	5/A8.5	6&7/A8.5	–	A	HM	HW-6	20 MIN.		108B
109A	3'-0"x7'-0"	NL	IHM	4/A8.7	5/A8.7	3/A8.7	A	IHM	HW-1A	–	PACK FRAME W/ BATT INSUL	109A
109B	3'-0"x7'-0"	NL	WD	5/A8.5	6&7/A8.5	–	A	HM	HW-21	20 MIN.		109B
110A	3'-0"x7'-0"	F	WD	5/A8.5	6&7/A8.5	8/A8.5	A	HM	HW-5	20 MIN.		110A
111A	3'-0"x7'-0"	HG	WD	5/A8.5	6&7/A8.5	–	A	HM	HW-7	20 MIN.		111A
112A	3'-0"x7'-0"	F	WD	5/A8.5	6&7/A8.5	8/A8.5	A	HM	HW-5	20 MIN.		112A
113A	3'-0"x7'-0"	HG	WD	5/A8.5	6&7/A8.5	8/A8.5	A	HM	HW-7	20 MIN.		113A
114A	3'-0"x7'-0"	NL	WD	5/A8.5	6&7/A8.5	–	A	HM	HW-3	–		114A
114B	3'-0"x7'-0"	NL	WD	5/A8.5	6&7/A8.5	–	A	HM	HW-3	20 MIN.		114B
115A	3'-0"x7'-0"	NL	WD	5/A8.5	6&7/A8.5	–	A	HM	HW-3	20 MIN.		115A
116A	3'-0"x7'-0"	NL	WD	5/A8.5	6&7/A8.5	–	A	HM	HW-3	20 MIN.		116A
117A	3'-0"x7'-0"	NL	WD	5/A8.5	6&7/A8.5	–	A	HM	HW-3	20 MIN.		117A
118A	PR 3'-0"x7'-0"	F	IHM	4/A8.7	5/A8.7	3/A8.7	D	IHM	HW-8	–	PACK FRAME W/ BATT INSUL	118A
118B	3'-0"x7'-0"	F	IHM	5/A8.5	6&7/A8.5	8/A8.5	A	HM	HW-5	20 MIN.		118B
119A	PR 3'-0"x7'-0"	F	IHM	4/A8.7	5/A8.7	3/A8.7	D	IHM	HW-8A	–	PACK FRAME W/ BATT INSUL	119A
119B	3'-0"x7'-0"	F	HM	5/A8.5	6&7/A8.5	8/A8.5	A	HM	HW-5	20 MIN.		119B
120A	3'-0"x7'-0"	F	WD	5/A8.5	6&7/A8.5	9/A8.5	A	HM	HW-9	20 MIN.		120A
121A	3'-0"x7'-0"	F	WD	5/A8.5	6&7/A8.5	9/A8.5	A	HM	HW-9	20 MIN.		121A
122A	3'-0"x7'-0"	F	HM	5/A8.5	6&7/A8.5	8/A8.5	A	HM	HW-17	20 MIN.		122A
124A	PR 3'-0"x6'-8"	F	WD	5/A8.5	6&7/A8.5	–	A	HM	HW-11	20 MIN.		124A
124B	PR 3'-0"x6'-8"	F	WD	5/A8.5	6&7/A8.5	–	A	HM	HW-11	20 MIN.		124B
126A	3'-0"x7'-0"	G	WD	5/A8.5	6&7/A8.5	–	M	HM	HW-3	20 MIN.		126A
126B	3'-6"x7'-6"	F	WD			–	A	HM	HW-12	–		126B
126C	4 @ 3'-0"x7'-0"	L	WD	4/A8.4	5/A8.4	6/A8.4	A	HM	–	–	HDW BY MANUFACTURER	126C
127A	3'-0"x7'-0"	F	HM	5/A8.5	6&7/A8.5	8/A8.5	A	HM	HW-10	20 MIN.		127A
128A	3'-0"x7'-0"	G	WD	5/A8.5	6&7/A8.5	–	A	HM	HW-3	20 MIN.		128A
128B	3'-0"x7'-0"	NL	WD	5/A8.5	6&7/A8.5	–	A	HM	HW-3	–		128B
129A	3'-0"x7'-0"	NL	WD	5/A8.5	6&7/A8.5	–	A	HM	HW-3	20 MIN.		129A
131A	3'-0"x7'-0"	NL	WD	5/A8.5	6&7/A8.5	8/A8.5	A	HM	HW-20	–		131A
132A	3'-0"x7'-0"	NL	WD	5/A8.5	6&7/A8.5	–	A	HM	HW-3	20 MIN.		132A
133A	3'-0"x7'-0"	NL	WD	5/A8.5	6&7/A8.5	–	A	HM	HW-3	20 MIN.		133A
133B	3'-6"x7'-0"	C-1	SS	7/A8.4	8/A8.4	9/A8.4	A	HM	–	20 MIN.	HDW BY MANUFACTURER	133B
135A	3'-0"x7'-0"	NL	WD	5/A8.5	6&7/A8.5	–	A	HM	HW-13	20 MIN.		135A
136A	PR 2'-6"x7'-0"	F	HM	5/A8.5	6&7/A8.5	–	A	HM	HW-11	20 MIN.		136A
138A	3'-0"x7'-0"	F	WD	5/A8.5	6&7/A8.5	–	A	HM	HW-5	20 MIN.		138A
139A	3'-0"x7'-0"	F	WD	5/A8.5	6&7/A8.5	11/A8.4	A	HM	HW-9	20 MIN.		139A
139B	3'-0"x7'-0"	F	WD	5/A8.5	6&7/A8.5	11/A8.4	A	HM	HW-9	20 MIN.		139B
139C	3'-0"x7'-0"	G	ALUM	7/A8.2	8/A8.2	9/A8.2	A	ALUM	HW-23	–	DR & FRAME UNIT	139C
140A	3'-0"x3'-8"	*F	WD	–		–	A	HM	HW-14	–	*HALF-HEIGHT DOOR	140A
141A	3'-0"x7'-0"	NL	WD	5/A8.5	6&7/A8.5	8/A8.5	A	HM	HW-3	20 MIN.		141A
142A	3'-0"x7'-0"	NL	WD	5/A8.5	6&7/A8.5	8/A8.5	A	HM	HW-3	20 MIN.		142A
144A	3'-0"x6'-8"	HG	WD	–	–	–	MFR	HM	–	–	MFR STD 3' SAUNA DOOR	144A
146A	3'-0"x7'-0"	F	WD	5/A8.5	6&7/A8.5	–	A	HM	HW-15	20 MIN.		146A
147A	3'-0"x7'-0"	NL	WD	5/A8.5	6&7/A8.5	–	A	HM	HW-13	20 MIN.	PACK FRAME W/ BATT INSUL	147A
147B	3'-0"x7'-0"	HG	IHM	1/A8.7	2/A8.7	6/A8.7	A	IHM	HW-1B	–		147B
148A	3'-0"x7'-0"	F	WD	5/A8.5	6&7/A8.5	–	A	HM	HW-16	–		148A
150A	3'-0"x7'-0"	NL	WD	5/A8.5	6&7/A8.5	–	A	HM	HW-17	20 MIN.		150A
151A	3'-0"x7'-0"	F	HM	5/A8.5	6&7/A8.5	–	A	HM	HW-18	20 MIN.		151A
151B	PR 2'-0"x6'-8"	BF	WD	10/A8.5	12/A8.5	11/A8.5	A	HM	HW-19	–		151B
153A	3'-0"x7'-0"	F	HM	5/A8.5	6&7/A8.5	–	A	HM	HW-18	20 MIN.		153A
153B	PR 2'-0"x6'-8"	BF	WD	10/A8.5	12/A8.5	11/A8.5	A	HM	HW-19	–		153B
154A	3'-0"x7'-0"	F	HM	5/A8.5	6&7/A8.5	–	A	HM	HW-18	20 MIN.		154A
154B	PR 2'-0"x6'-8"	BF	WD	10/A8.5	12/A8.5	11/A8.5	A	HM	HW-19	–		154B
155A	3'-0"x7'-0"	F	HM	5/A8.5	6&7/A8.5	–	A	HM	HW-17	20 MIN.		155A
156A	3'-0"x7'-0"	F	HM	5/A8.5	6&7/A8.5	–	A	HM	HW-18	20 MIN.		156A
156B	PR 2'-0"x6'-8"	BF	WD	10/A8.5	12/A8.5	11/A8.5	A	HM	HW-19	–		156B
157A	3'-0"x7'-0"	F	HM	5/A8.5	6&7/A8.5	11/A8.4	A	HM	HW-9	20 MIN.		157A
158A	3'-0"x7'-0"	F	IHM	4/A8.7	5/A8.7	3/A8.7	A	IHM	HW-1C	–	PACK FRAME W/ BATT INSUL	158A
159A	3'-0"x7'-0"	F	HM	5/A8.5	6&7/A8.5	–	A	HM	HW-18	20 MIN.		159A
160A	3'-0"x7'-0"	F	WD	5/A8.5	6&7/A8.5	–	A	HM	HW-16	–		160A
161A	3'-0"x7'-0"	F	WD	5/A8.5	6&7/A8.5	–	A	HM	HW-16A	–		161A
161B	PR 2'-0"x6'-8"	BF	WD	10/A8.5	12/A8.5	11/A8.5	A	HM	HW-19	–		161B
162A	3'-0"x7'-0"	F	HM	5/A8.5	6&7/A8.5	–	A	HM	HW-18	20 MIN.		162A
162B	PR 2'-0"x6'-8"	BF	WD	10/A8.5	12/A8.5	11/A8.5	A	HM	HW-19	–		162B
163A	3'-0"x7'-0"	F	HM	5/A8.5	6&7/A8.5	–	A	HM	HW-18	20 MIN.		163A
163B	PR 2'-0"x6'-8"	BF	WD	10/A8.5	12/A8.5	11/A8.5	A	HM	HW-19	–		163B
164A	3'-0"x7'-0"	F	IHM	4/A8.7	5/A8.7	3/A8.7	A	IHM	HW-1A	–	PACK FRAME W/ BATT INSUL	164A
165A	3'-0"x7'-0"	F	HM	5/A8.5	6&7/A8.5	–	A	HM	HW-18	20 MIN.		165A
165B	PR 2'-0"x6'-8"	BF	WD	10/A8.5	12/A8.5	11/A8.5	A	HM	HW-19	–		165B
166A	3'-0"x7'-0"	F	HM	5/A8.5	6&7/A8.5	–	A	HM	HW-18	20 MIN.		166A
166B	PR 2'-0"x6'-8"	BF	WD	10/A8.5	12/A8.5	11/A8.5	A	HM	HW-19	–		166B
167A	3'-6"x7'-0"	F	IHM	4/A8.7	5/A8.7	3/A8.7	A	IHM	HW-22		PACK FRAME W/ BATT INSUL	167A

STATE OF ALASKA 49TH
Gerald V. Neubert
No. A-4047
REGISTERED PROFESSIONAL ARCHITECT

Date Stamped: 04/21/09

Date	Revision	By

USKH
Architecture • Engineering
Land Surveying • Planning

2515 'A' Street
Anchorage, Alaska 99503
(907) 276-4245

544 4th Avenue, Suite 102
Fairbanks, Alaska 99701
(907) 452-2128

3031 Clinton Drive
Suite 200
Juneau, Alaska 99801
(907) 790-2901

351 W Parks Hwy, Suite 200
Wasilla, Alaska 99654
(907) 376-7815

Project:
DOMESTIC VIOLENCE SHELTER

TUNDRA WOMEN'S COALITION
P.O. BOX 2029
250 6th AVENUE
BETHEL, ALASKA 99559

Project Mgr.	JC	
Drawn	TDB	JC
Checked		
Date	21 APRIL 2009	

Sheet Contents:
DOOR TYPES, DOOR & RELITE SCHEDULE

Sheet No.:
A2.5

USKH W.O. 1074400

DRAWING NAME: I:\1074400\Dwgs\A sheets\1074400-A2_5.dwg PLOTTED: Apr 21, 2009 - 11:20am

TUNDRA WOMEN'S FIRST FLOOR ROOM FINISH SCHEDULE

ROOM NO	ROOM NAME	FLOOR	BASE	WALLS				CEILING		MILLWORK	REMARKS
				N	S	E	W	MAT'L	HEIGHT	GROUP	
100	VESTIBULE	F1/F7/F8	B1	W1	W1	W1	W1	GWB/C1	8'-6"	--	--
101	WAITING	F1/F7/F8	B1	W1	W1	W1	W1	C2	8'-6"	--	M1
102	MAIN CORRIDOR	F1/F7/F8	B1	W4/M3	W1/M3	W1/M3	W1/M3	C2	8'-6"	--	--
103	PROGRAM OFFICE	F2	B1	W1	W1	W1	W1	C2	8'-0"	--	W5, M1
104	RECEPTION	F2	B1	W1/M4	W1	W1	W1	C2	8'-0"	GROUP 1	W5, M1
105	TWC BUSINESS	F2	B1	W1	W1	W1	W1	C2	8'-0"	--	W5
106	VAULT	F3	B1	W1	W1	W1	W1	GWB/C1	9'-11 1/2"	--	W5
107	SMALL CONF RM	F2	B1	W1	W1	W1	W1	C2	8'-0"	--	W5
108	DRY FOOD STORAGE	F3	B1	W1	W1	W1	W1	GWB/C1	9'-11 1/2"	--	W5
109	SOUTHEAST CORRIDOR	F2	B1	W1/M3	W1/M3	W1/M3	W1/M3	C2	8'-6"	--	W5
110	CENTER STORAGE	F3	B1	W1	W1	W1	W1	GWB/C1	8'-6"	--	W5
111	WORK ROOM	F2	B1	W1	W1	W1	W1	C2	8'-6"	GROUP 1	--
112	JANITOR	F3	B2	W1/W3	W1	W1/W3	W1/W3	GWB/C1	8'-0"	--	W5
113	BREAK AREA	F6	B1	W1/M4	W1, W4	W1/M4	W1/M4	C1/C2	8'-6"	GROUP 1	W5
114	TWC EXEC DIR	F2	B1	W1	W1	W1	W1	C2	8'-0"	--	W5, M1
115	TWC PROGRAM SVCS	F2	B1	W1	W1	W1	W1	C2	8'-0"	--	W5, M1
116	LEGAL	F2	B1	W1	W1	W1	W1	C2	8'-0"	--	W5, M1
117	PROGRAM OFFICE	F2	B1	W1	W1	W1	W1	C2	8'-0"	--	W5, M1
118	BULK STORAGE & RECEIVING	F6	B1	W1	W1	W1	W1	GWB/C1	9'-11 1/2"	GROUP 3	W5
119	MECHANICAL	F6/CONC.	B1	W1	W1	W1	W1	GWB/C1	9'-11 1/2"	--	W5
120	WOMEN'S RR	F4	B3	W1/W2/W7/W8	W1/W2/W7/W8	W1/W2/W7/W8	W1/W2/W7/W8	GWB/C1	8'-0"	GROUP 3	W5
121	MEN'S RR	F4	B3	W1/W2/W7/W8	W1/W2/W7/W8	W1/W2/W7/W8	W1/W2/W7/W8	GWB/C1	8'-0"	GROUP 3	W5
122	ELEC	F3	B1	W1	W1	W1	W1	C2	9'-11 1/2"	--	W5
123	CORRIDOR TWC3	F2	B1	--	--	W1, M3	W1, M3	C2	8'-6"	--	--
124	EAST STORAGE	F2	B1	W1	W1	W1	W1	GWB/C1	8'-0"	--	W5
125	CORRIDOR TWC2	F2	B1	W1	W1/M3	W1/M3	W1/M3	C2	8'-6"	--	--
126	TWC CONF RM	F2	B1	W1/M4	W1/M4	W1/M4	W1/M4	C1/C2/C7	8'-6"	GROUP 1	W5, M1
127	DATA	F10	B1	W1	W1	W1	W1	C2	9'-11 1/2"	--	W5
128	TAAV CENTER	F2	B1	W1/M4	W1/M4	W1/M4	W1	C2/C3/C4	8'-6"	GROUP 1	CEILING ON EAST SIDE IS 8'-0". SEE SHEET A6.1, W5, M1
129	TAAV OFFICE	F2	B1	W1	W1	W1	W1	C2	8'-0"	--	W5, M1
130	CORRIDOR TWC1	F2	B1	--	--	W1/M3	W1/M3	C2	9'-0"	--	--
131	SOUTHWEST CORRIDOR	F5	B1	W1/M3	W1/M3	W1/M3	W1/M3	C2	8'-6"	--	W5
132	CLINICIAN	F2	B1	W1	W1	W1	W1	C2	8'-0"	--	W5
133	KITCHEN	F3	B1	W1	W1	W1	W1	GWB/C1	9'-0"	GROUP 2	W5, M1
134	WALK-IN COOLERS	--	B1	--	W1	W1	--	GWB/C1	7'-6"	--	WALK-IN COOLERS TO BE STAND-ALONE-FRONT TO BACK
135	LAUNDRY/LINEN	F6/CONC.	B1	W1	W1	W1	W1	GWB/C1	8'-6"	GROUP 2	W5
136	PASS-THRU	F5	B1	--	--	W1/M3	W1/M3	C2	8'-6"	--	--
137	DINING ROOM	F5	B1	W1	W1	W1	W1	C2	8'-0"	--	M1
138	JAN	F3	B2	W1/W3	W1	W1/W3	W1/W3	GWB/C1	8'-0"	--	M5
139	WOMEN'S RESTROOM	F4	B3	W1/W2/W7/W8	W1/W2/W7/W8	W1/W2/W7/W8	W1/W2/W7/W8	GWB/C1	8'-0"	GROUP 3	SHOWER STALL & TUB WALLS TO BE FULL HEIGHT CT. W5
140	ADVOCATE	F5	B1	W1	W1	W1	W1	--	8'-0"	GROUP 2	W5
141	CONF/INTAKE	F2	B1	W1	W1	W1	W1	C2	8'-0"	--	W5, M1
142	MANAGER	F2	B1	W1	W1	W1	W1	C2	8'-0"	--	W5, M1
143	SHOWER	F4	F4	W2	W2	W2	W2	GWB/C1	8'-0"	--	SHOWER STALL TO BE FULL HEIGHT CT
144	SAUNA	F4	–	W1	W1	W1	W1	GWB/C1	9'-11 1/2"	--	SAUNA TO BE MANUFACTURED KIT BY FINLANDIA
145	LIVING AREA	F5	B1	W1	W1	W1	W1	C2/C3	8'-0"	--	M1
146	RESTROOM	F3	B2	W1/W3	W1	W1/W3	W1/W3	GWB/C1	9'-0"	--	W5
147	CHILDREN'S PLAY AREA	F5	B1	W1/M4	W1/M4	W1/M4	W1/M4	C5/C6	8'-6"	GROUP 2	W5, M1
148	RESTROOM	F3	B2	W1/W3	W1/W3	W1/W3	W1/W3	GWB/C1	8'-0"	--	W5
149	WEST CORRIDOR	F5	B1	--	--	W1/M3	W1/M3	C2	8'-6"	--	--
150	COMP/TEL	F5	B1	W1	W1	W1	W1	C2	8'-6"	--	W5
151	FAMILY BEDROOM #1	F9	B1	W1	W1	W1	W1	GWB/C1	8'-0"	--	W5, M2
152	NORTH CORRIDOR	F5	B1	W1/M3	W1/M3	W1/M3	W1/M3	C2	8'-6"	--	--
153	FAMILY BEDROOM #2	F9	B1	W1	W1	W1	W1	GWB/C1	8'-0"	--	W5, M2
154	FAMILY BEDROOM #3	F9	B1	W1	W1	W1	W1	W1	8'-0"	--	W5, M2
155	ELEC	F3	B1	W1	W1	W1	W1	C2	9'-11 1/2"	--	W5
156	FAMILY BEDROOM #4	F9	B1	W1	W1	W1	W1	GWB/C1	8'-0"	--	W5, M2
157	BOY'S RESTROOM	F4	B3	W1/W2/W7/W9	W1/W2/W7/W9	W1/W2/W7/W9	W1/W2/W7/W9	GWB/C1	8'-0"	GROUP 3	W5
158	BREEZEWAY	F1/F7/F8	B1	W1	W1	W1	W1	GWB/C1	8'-0"	--	W5
159	FAMILY SUITE	F9	B1	W1	W1	W1	W1	GWB/C1	8'-0"	GROUP 2	W5, M2
160	FAMILY SUITE RESTROOM	F3	B2	W1/W3	W1/W3	W1/W3	W1/W3	GWB/C1	8'-0"	GROUP 3	W5
161	FAMILY BEDROOM #5	F9	B1	W1	W1	W1	W1	GWB/C1	8'-0"	--	W5, M2
162	BEDROOM	F9	B1	W1	W1	W1	W1	GWB/C1	8'-0"	--	W5, M2
163	FAMILY BEDROOM #6	F9	B1	W1	W1	W1	W1	GWB/C1	8'-0"	--	W5, M2
164	REAR CORRIDOR	F1/F7/F8	B1	W1	W1	W1	W1	GWB/C1	8'-0"	--	W5
165	FAMILY BEDROOM #7	F9	B1	W1	W1	W1	W1	GWB/C1	8'-0"	--	W5, M2
166	FAMILY BEDROOM #8	F9	B1	F2	W1	W1	W1	GWB/C1	8'-0"	--	W5, M2
167	LIFT STATION	F6	B1	W1/W3	W1/W3	W1/W3	W1/W3	GWB/C1	8'-0"	--	W5

COLOR LEGEND:

FLOOR TREATMENTS:

F1 MODULAR WALK-OFF TILE: INTERFACEFLOR, SUPER FLOR, INDIAN SPICE, #609167
NOTE: ARCHITECT TO PROVIDE WALK-OFF MAT FLOOR PATTERN
F2 MODULAR CARPET TILE: J&J COMMERCIAL, CITY BLOCKS MODULAR, HARVARD SQUARE, #1304
F3 VINYL SHEET FLOORING: ARMSTRONG, CONNECTION CORLON, YELLOW GOLD, #88732
F4 MOSAIC FLOOR TILE: DALTILE, KEYSTONES, 2"x2", URBAN PUTTY SPECKLE, #D201
F5 RUBBER FLOORING: NORA SYSTEMS, NORAPLAN ECO, MUSEUM OF SCIENCE, #6159
F6 LINOLEUM: ARMSTRONG, GRANETTE, POLLEN, #LP170
F7 MODULAR WALK-OFF TILE: INTERFACEFLOR, SUPER FLOR, PRIMROSE, #609163
F8 MODULAR WALK-OFF TILE: INTERFACEFLOR, FLOR, BUFFALO, #609179
F9 VINYL SHEET FLOORING: ARMSTRONG, TIMBERLINE, MEDIUM MAPLE, #37012
F10 STATIC DISSIPATIVE FLOORING: JOHNSONITE INC., GRANIT AS, MORNING MOST, #795

BASE:

B1 RUBBER BASE: ROPPE, PINNACLE RUBBER BASE, TYPE TS, 4", STANDARD TOE, BLACK BROWN, #193
B2 INTEGRAL SHEET VINYL: 5" SELF COVE
B3 MOSAIC BASE TILE: DALTILE, KEYSTONES, BUILT-UP BASE, MB-5A, 2"X2", URBAN PUTTY SPECKLE, #D201

WALL TREATMENTS:

W1 FIELD WALL PAINT: SHERWIN WILLIAMS, KILIM BEIGE, #SW 6106
W2 CERAMIC WALL TILE SHOWER FIELD: DALTILE, DESIGNER COLOURS, 12"x12", ALMOND, #DC02
W3 FIBERGLASS REINFORCED PANELS: CRANE COMPOSITES, INC., PEBBLED EMBOSSED FINISH, SILVER, #66
W4 ACCENT WALL PAINT: SHERWIN WILLIAMS. MARIGOLD, #SW 6664
W5 DOOR FRAME PAINT: SHERWIN WILLIAMS, URBANE BRONZE, #SW 7048
W6 METAL DOOR PAINT: SHERWIN WILLIAMS, URBANE BRONZE, #SW 7048
W7 CERAMIC WALL TILE FIELD: DALTILE, 6"x6", SEMIGLOSS, URBAN PUTTY, #0161
W8 CERAMIC WALL TILE ACCENT: DALTILE, 6"x6", SEMIGLOSS, MUSTARD, #Q012
W9 CERAMIC WALL TILE ACCENT: DALTILE, 6"x6", SEMIGLOSS, PUMPKIN SPICE, #Q090

CEILING FINISHES:

C1 PAINTED GWB: SHERWIN WILLIAMS, KILIM BEIGE, #SW 6106
C2 ACOUSTICAL CEILING PANEL: ARMSTRONG, ULTIMA, #1912, 24"x24"x3/4", WHITE
C3 CLASSIC TRIM: ARMSTRONG, AXIOM CLASSIC, PERMETER TRIM 4" CURVED, WHITE
C4 ACOUSTICAL CEILING TILE: ARMSTRONG, FINE FISSURED, #746, 12"x12"x5/8", WHITE
C5 ACOUSTICAL CEILING PANEL: ARMSTRONG, CIRRUS THEMES PLAIN PANEL, #S299, 24"x24"x3/4", WHITE, 9/16" BEVELED TEGULAR
C6 ACOUSTICAL CEILING PANEL: ARMSTRONG, CIRRUS THEMES CRITTERS, #S510, #S512, 24"x24"x3/4", WHITE, 9/16" BEVELED TEGULAR
C7 CLASSIC TRIM: ARMSTRONG, AXIOM CLASSIC, PERMETER TRIM 6" STRAIGHT, WHITE

MILLWORK FINISHES:

MILLWORK DRAWER HARDWARE TO BE HAFELE, STAINLESS STEEL HANDLES, 117.05.610

GROUP 1
CABINET FACE & BOXES: PLASTIC LAMINATE: FORMICA, PLANKED DELUXE PEAR, LUXE FINISH, #6206-LX
EDGE BAND: THICK PVC. DOELLKEN-WOODTAPE, FLANKED PEAR, #3118-1518-1
COUNTER TOP & BACKSPLASH: PLASTIC LAMINATE; WILSONART, MISSION SAGE #4848-38

GROUP 2
CABINET FACE: PLASTIC LAMINATE; FORMICA, TO BE SELECTED BY ARCHITECT
EDGE BAND: THICK PVC. DOELLKEN-WOODTAPE,
COUNTER TOP & BACKSPLASH: PLASTIC LAMINATE; FORMICA, TO BE SELECTED BY ARCHITECT

GROUP 3
CABINET FACE & BOXES: PLASTIC LAMINATE; FORMICA, FORMICA, PLANKED DELUXE PEAR, LUXE FINISH, #6206-LX
EDGE BAND: THICK PVC. DOELLKEN-WOODTAPE, FLANKED PEAR, #3118-1518-1
COUNTER TOP & BACKSPLASH: PLASTIC LAMINATE; WILSONART, WESTERN WHITE, #4869-60

MISC FINISHES:

M1 HORIZONTAL BLINDS: HUNTER DOUGLAS CONTRACT, 1" ALUMINUM BLINDS, MODEL #CL82,
M2 CURTAINS & RODS: SEE SPECIFICATIONS SECTION 12497
M3 CORNER GUARD: PAWLING CORPORATION, CG-10,
M4 WALL GUARD: PAWLING CORPORATION, WG-4, 4"

STATE OF ALASKA 49TH
Gerald V. Neubert
No. A-4047
REGISTERED PROFESSIONAL ARCHITECT

Date Stamped: 04/21/09

Date	Revision	By

USKH
Architecture • Engineering
Land Surveying • Planning

2515 'A' Street
Anchorage, Alaska 99503
(907) 276-4245

544 4th Avenue, Suite 102
Fairbanks, Alaska 99701
(907) 452-2128

3031 Clinton Drive
Suite 200
Juneau, Alaska 99801
(907) 790-2901

351 W Parks Hwy, Suite 200
Wasilla, Alaska 99654
(907) 376-7815

Project:
DOMESTIC VIOLENCE SHELTER

TUNDRA WOMEN'S COALITION
P.O. BOX 2029
250 6th AVENUE
BETHEL, ALASKA 99559

Project Mgr.	JC	
Drawn	TDB	JC
Checked		
Date	21 APRIL 2009	

Sheet Contents:
ROOM FINISH SCHEDULE

Sheet No.:
A2.6

USKH W.O. 1074400

DRAWING NAME: I:\1074400\Dwgs\A\sheets\1074400-A2_6.dwg PLOTTED: Apr 21, 2009 - 11:21am

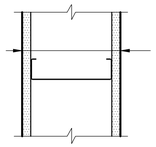

- 5/8" TYPE 'X' GWB
- 600S162-33 METAL STUD @ 24" OC
- 5/8" TYPE 'X' GWB

C8 INTERIOR - 6"

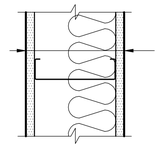

- 5/8" TYPE 'X' GWB
- 600S162-33 METAL STUD @ 24" OC
- SOUND ATTENUATION BATTS
- 5/8" TYPE 'X' GWB

RATING STC – 45

C1 INTERIOR - 6"

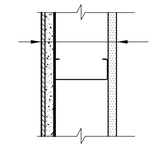

- TILE – SEE SCHEDULE
- 5/8" CEMENTITIOUS BACKER BOARD
- MOISTURE BARRIER
- 350S162-33 METAL STUD @ 24" OC
- 5/8" TYPE 'X' GWB

B2 INTERIOR - 3 1/2"

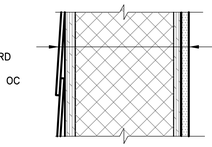

- CEMENTITIOUS SIDING
- AIR BARRIER
- STRUCTURAL INSULATED PANEL (R-30)
- VAPOR RETARDER
- 5/8" TYPE-X GWB

A1 EXTERIOR/ R-30

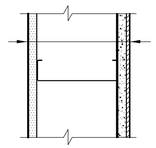

- 5/8" TYPE 'X' GWB
- 600S162-33 METAL STUD @ 24" OC
- 5/8" TYPE 'X' GWB
- MOISTURE BARRIER
- 5/8" CEMENTITIOUS BACKER BOARD
- TILE – SEE SCHEDULE

C9 INTERIOR - 6"

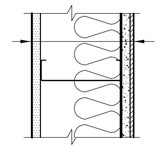

- 5/8" TYPE 'X' GWB
- 600S162-33 METAL STUD @ 24" OC
- SOUND ATTENUATION BATTS
- 5/8" TYPE 'X' GWB
- MOISTURE BARRIER
- 5/8" CEMENTITIOUS BACKER BOARD
- TILE – SEE SCHEDULE

C2 INTERIOR - 6"

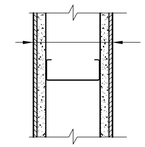

- TILE – SEE SCHEDULE
- 5/8" CEMENTITIOUS BACKER BOARD
- 350S162-33 METAL STUD @ 24" OC
- 5/8" CEMENTITIOUS BACKER BOARD
- TILE – SEE SCHEDULE

B2 INTERIOR - 3 1/2"

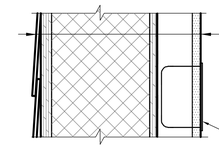

- CEMENTITIOUS SIDING
- AIR BARRIER
- STRUCTURAL INSULATED PANEL (R-30)
- VAPOR RETARDER
- 2 1/2" METAL STUDS @ 24" OC
- 5/8" TYPE 'X' GWB

ELECTRICAL BOX, WHERE OCCURS

A2 EXTERIOR/ R-30

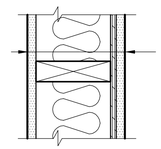

- 5/8" TYPE 'X' GWB
- 2 x 6 WOOD STUD @ 16" OC
- SOUND ATTENUATION BATTS
- STRUCTURAL SHEATHING ON CORRIDOR SIDE
- 5/8" TYPE 'X' GWB

D1 INTERIOR - 6" SHEAR

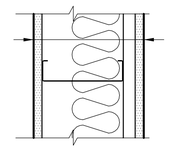

- 5/8" TYPE 'X' GWB
- 600S162-33 METAL STUD @ 24" OC
- SOUND ATTENUATION BATTS
- RESILENT CHANNELS @ 16" OC HORIZONTALLY
- 5/8" TYPE 'X' GWB

RATING STC – 50

C3 INTERIOR - 6"

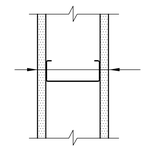

- 5/8" TYPE 'X' GWB
- 350S162-33 METAL STUD @ 24" OC
- 5/8" TYPE 'X' GWB

B3 INTERIOR - 3 1/2"

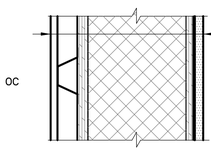

- WOOD COMPOSITE SIDING
- 150F125-18 VERTICAL HAT CHANNELS @ 16" OC
- AIR BARRIER
- STRUCTURAL INSULATED PANEL (R-30)
- VAPOR RETARDER
- 5/8" TYPE 'X' GWB

A3 EXTERIOR/ R-30

NOTE: PAINT HAT CHANNELS BLACK AT WOOD COMPOSITE SIDING JOINTS, TYPICAL.

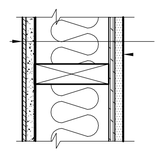

- TILE – SEE SCHEDULE
- 5/8" CEMENTITIOUS BACKER BOARD
- MOISTURE BARRIER
- 2 x 6 WOOD STUD @ 16" OC
- SOUND ATTENUATION BATTS
- STRUCTURAL SHEATHING ON CORRIDOR SIDE
- 5/8" TYPE 'X' GWB

D2 INTERIOR - 6" SHEAR

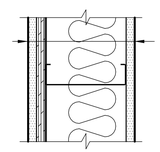

- 5/8" TYPE 'X' GWB
- STRUCTURAL SHEATHING ON CORRIDOR SIDE
- 600S200-33 METAL STUD @ 16" OC
- SOUND ATTENUATION BATTS
- 5/8" TYPE 'X' GWB

RATING STC – 45

C4 INTERIOR - 6" SHEAR

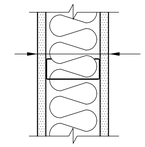

- 5/8" TYPE 'X' GWB
- 350S162-33 METAL STUD @ 24" OC
- SOUND ATTENUATION
- 5/8" TYPE 'X' GWB

RATING STC – 45

B4 INTERIOR - 3 1/2"

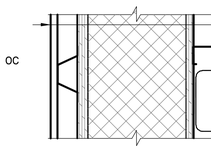

- WOOD COMPOSITE SIDING
- 150F125-18 VERTICAL HAT CHANNELS @ 16" OC
- AIR BARRIER
- STRUCTURAL INSULATED PANEL (R-30)
- VAPOR RETARDER
- 2 1/2" METAL STUDS @ 24" OC
- 5/8" TYPE 'X' GWB

ELECTRICAL BOX WHERE OCCURS

A4 EXTERIOR/ R-30

NOTE: PAINT HAT CHANNELS BLACK AT WOOD COMPOSITE SIDING JOINTS, TYPICAL.

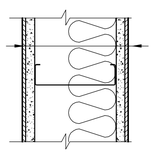

- TILE – SEE SCHEDULE
- 5/8" CEMENTITIOUS BACKER BOARD
- 600S162-33 METAL STUD @ 24" OC
- SOUND ATTENUATION BATTS
- 5/8" CEMENTITIOUS BACKER BOARD
- TILE – SEE SCHEDULE

C5 INTERIOR - 6"

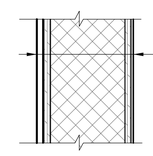

- CEMENTITIOUS PANEL
- AIR BARRIER
- STRUCTURAL INSULATED PANEL (R-23)
- VAPOR RETARDER

A5 EXTERIOR/ R-23

PERIMETER SKIRTING

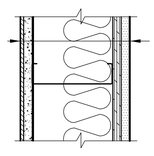

- TILE – SEE SCHEDULE
- 5/8" CEMENTITIOUS BACKER BOARD
- VAPOR BARRIER
- 600S200-33 METAL STUD @ 16" OC
- SOUND ATTENUATION BATTS
- STRUCTURAL SHEATHING ON CORRIDOR SIDE
- 5/8" TYPE 'X' GWB

RATING STC – 45

C6 INTERIOR - 6" SHEAR

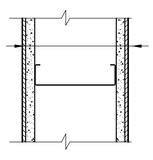

- TILE – SEE SCHEDULE
- 5/8" CEMENTITIOUS BACKER BOARD
- 600S162-33 STL STUD @ 24" OC
- 5/8" CEMENTITIOUS BACKER BOARD
- TILE – SEE SCHEDULE

C7 INTERIOR - 6"

STATE OF ALASKA 49TH Gerald V. Neubert No. A-4047 REGISTERED PROFESSIONAL ARCHITECT

Date Stamped: 04/21/09

Date	Revision	By

USKH

Architecture • Engineering

Land Surveying • Planning

2515 'A' Street
Anchorage, Alaska 99503
(907) 276-4245

544 4th Avenue, Suite 102
Fairbanks, Alaska 99701
(907) 452-2128

3031 Clinton Drive
Suite 200
Juneau, Alaska 99801
(907) 790-2901

351 W Parks Hwy, Suite 200
Wasilla, Alaska 99654
(907) 376-7815

Project:

DOMESTIC VIOLENCE SHELTER

TUNDRA WOMEN'S COALITION

P.O. BOX 2029
250 6th AVENUE
BETHEL, ALASKA 99559

Project Mgr.	JC	
Drawn	TDB	
Checked		
Date	21 APRIL 2009	

Sheet Contents:

WALL TYPES

Sheet No.:

A2.7

USKH W.O. 1074400

DRAWING NAME: I:\1074400\Dwgs\A\sheets\1074400-A2_7.dwg PLOTTED: Apr 21, 2009 – 11:22am

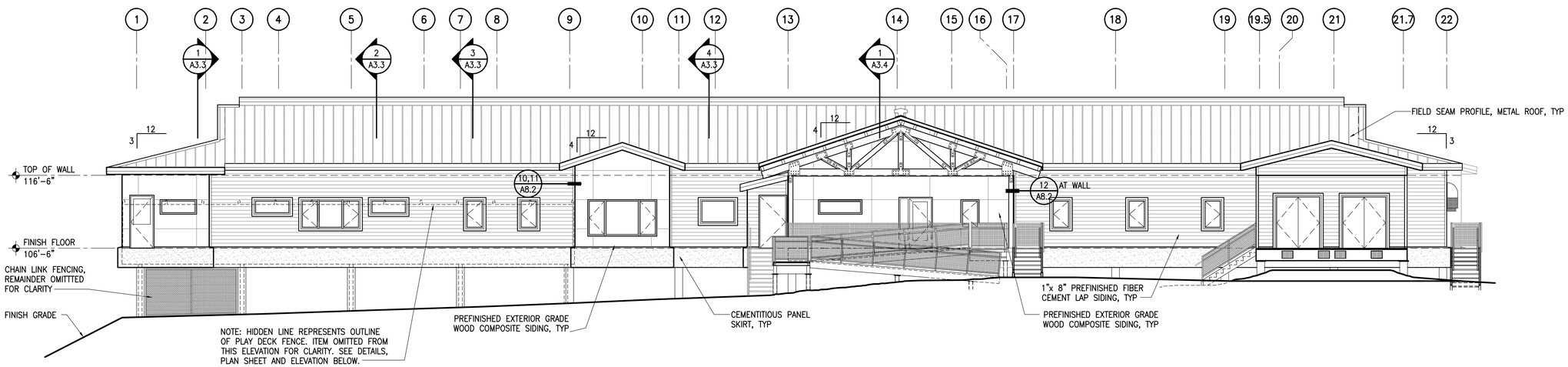

1 / A3.1 SOUTH ELEVATION
SCALE: 1/8"=1'-0"

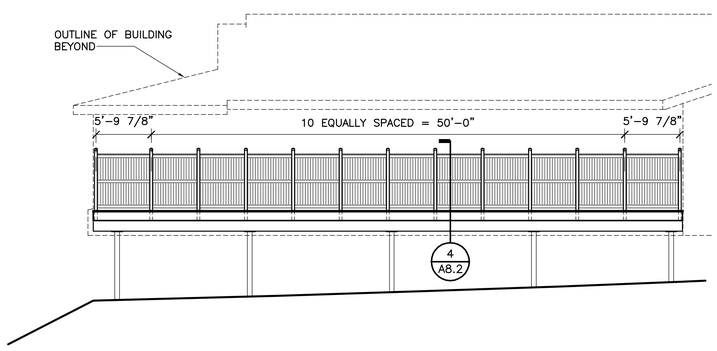

3 / A3.1 SOUTH ELEVATION OF PLAY DECK AREA
SCALE: 1/8"=1'-0"

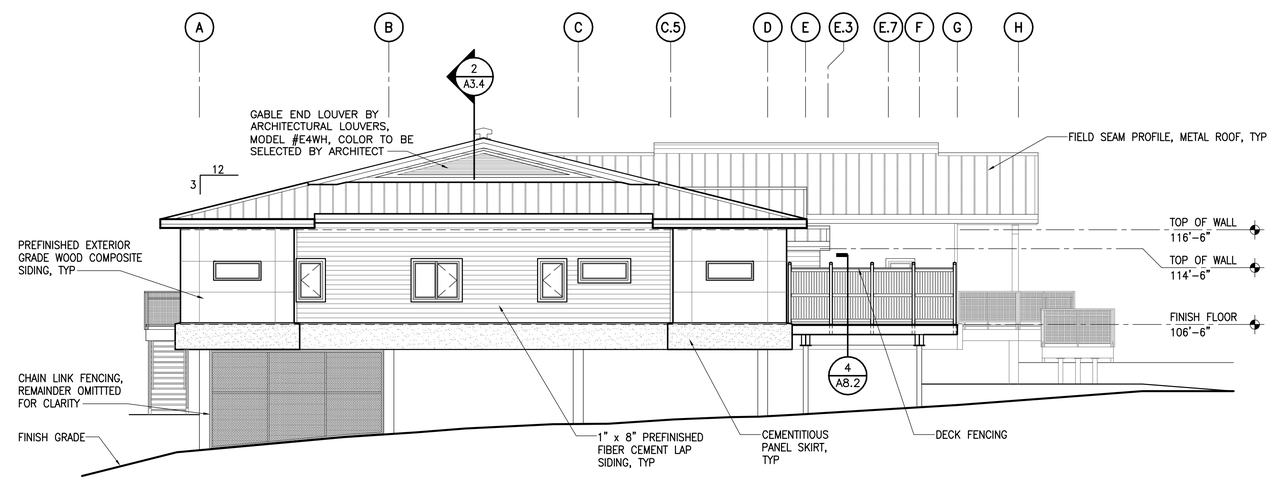

2 / A3.1 WEST ELEVATION
SCALE: 1/8"=1'-0"

STATE OF ALASKA 49TH
Gerald V. Neubert
No. A-4047
REGISTERED PROFESSIONAL ARCHITECT

Date Stamped: 04/21/09

Date	Revision	By

USKH
Architecture • Engineering
Land Surveying • Planning

2515 'A' Street
Anchorage, Alaska 99503
(907) 276-4245

544 4th Avenue, Suite 102
Fairbanks, Alaska 99701
(907) 452-2128

3031 Clinton Drive
Suite 200
Juneau, Alaska 99801
(907) 790-2901

351 W Parks Hwy, Suite 200
Wasilla, Alaska 99654
(907) 376-7815

Project:
DOMESTIC VIOLENCE SHELTER

TUNDRA WOMEN'S COALITION
P.O. BOX 2029
250 6th AVENUE
BETHEL, ALASKA 99559

Project Mgr.	JC	
Drawn	JL	JC
Checked		
Date	21 APRIL 2009	

Sheet Contents:
EXTERIOR ELEVATIONS – SOUTH & WEST

Sheet No.:
A3.1

USKH W.O. 1074400

DRAWING NAME: I:\1074400\Dwgs\A\sheets\1074400-A3_1.dwg PLOTTED: Apr 21, 2009 - 11:23am

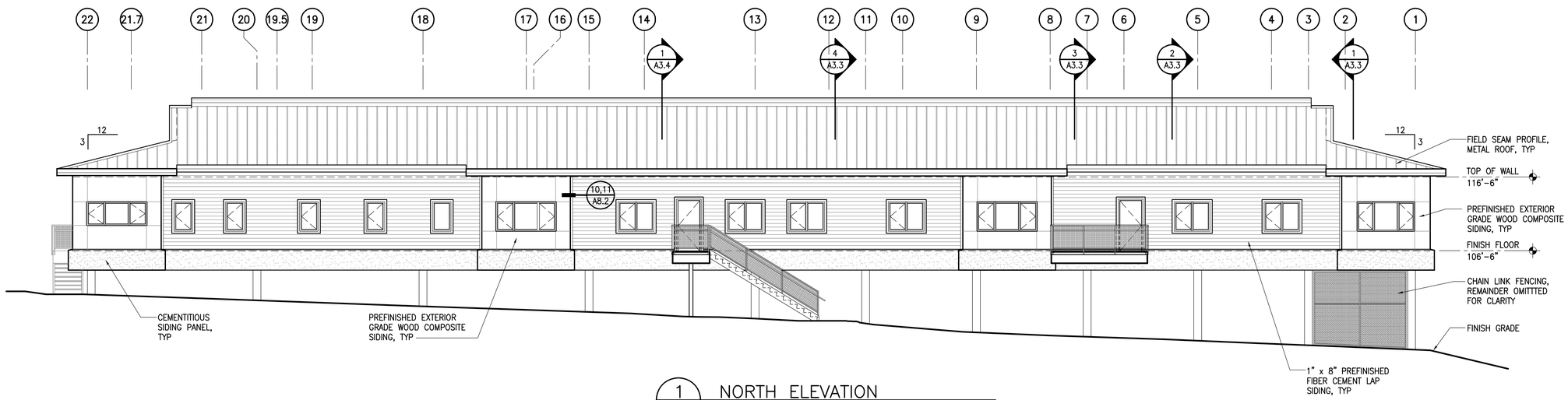

1 / A3.2 NORTH ELEVATION

SCALE: 1/8"=1'-0"

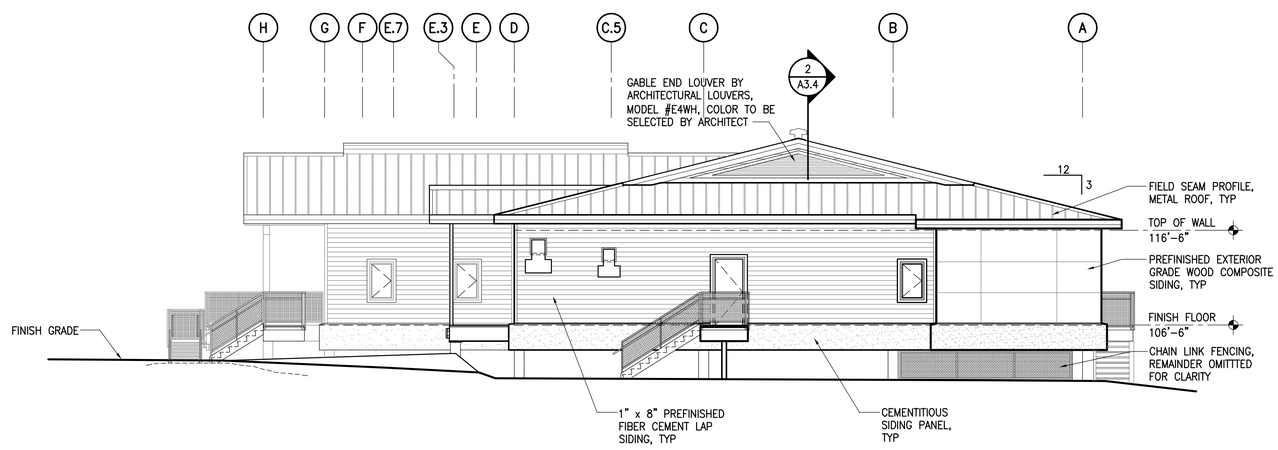

2 / A3.2 EAST ELEVATION

SCALE: 1/8"=1'-0"

STATE OF ALASKA 49TH Gerald V. Neubert No. A-4047 REGISTERED PROFESSIONAL ARCHITECT

Date Stamped: 04/21/09

Date	Revision	By

USKH

Architecture • Engineering

Land Surveying • Planning

2515 'A' Street
Anchorage, Alaska 99503
(907) 276-4245

544 4th Avenue, Suite 102
Fairbanks, Alaska 99701
(907) 452-2128

3031 Clinton Drive
Suite 200
Juneau, Alaska 99801
(907) 790-2901

351 W Parks Hwy, Suite 200
Wasilla, Alaska 99654
(907) 376-7815

Project:

DOMESTIC VIOLENCE SHELTER

TUNDRA WOMEN'S COALITION

P.O. BOX 2029
250 6th AVENUE
BETHEL, ALASKA 99559

Project Mgr.	JC	
Drawn	MAB	JC
Checked		
Date	21 APRIL 2009	

Sheet Contents:

EXTERIOR ELEVATIONS – NORTH & EAST

Sheet No.:

A3.2

USKH W.O. 1074400

DRAWING NAME: I:\1074400\Dwgs\A\sheets\1074400-A3_2.dwg PLOTTED: Apr 21, 2009 - 11:23am

4 / A3.3 BUILDING SECTION
SCALE: 1/8"=1'-0"

1 / A3.3 BUILDING SECTION
SCALE: 1/8"=1'-0"

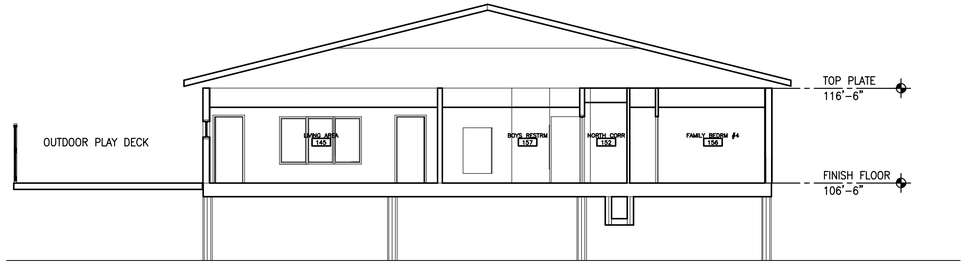

2 / A3.3 BUILDING SECTION
SCALE: 1/8"=1'-0"

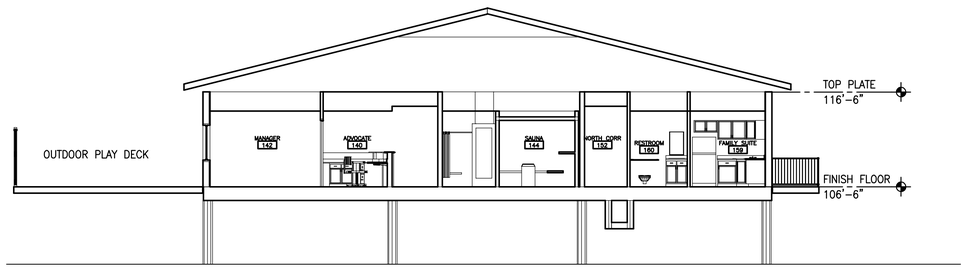

3 / A3.3 BUILDING SECTION
SCALE: 1/8"=1'-0"

STATE OF ALASKA 49TH
Gerald V. Neubert
No. A-4047
REGISTERED PROFESSIONAL ARCHITECT

Date Stamped: 04/21/09

Date	Revision	By

USKH
Architecture • Engineering
Land Surveying • Planning

2515 'A' Street
Anchorage, Alaska 99503
(907) 276-4245

544 4th Avenue, Suite 102
Fairbanks, Alaska 99701
(907) 452-2128

3031 Clinton Drive
Suite 200
Juneau, Alaska 99801
(907) 790-2901

351 W Parks Hwy, Suite 200
Wasilla, Alaska 99654
(907) 376-7815

Project:
DOMESTIC VIOLENCE SHELTER

TUNDRA WOMEN'S COALITION
P.O. BOX 2029
250 6th AVENUE
BETHEL, ALASKA 99559

Project Mgr.	JC	
Drawn	MAB	JC
Checked		
Date	21 APRIL 2009	

Sheet Contents:
BUILDING SECTIONS

Sheet No.:
A3.3

USKH W.O. 1074400

DRAWING NAME: I:\1074400\Dwgs\A\sheets\1074400-A3_3.dwg PLOTTED: Apr 21, 2009 - 11:24am

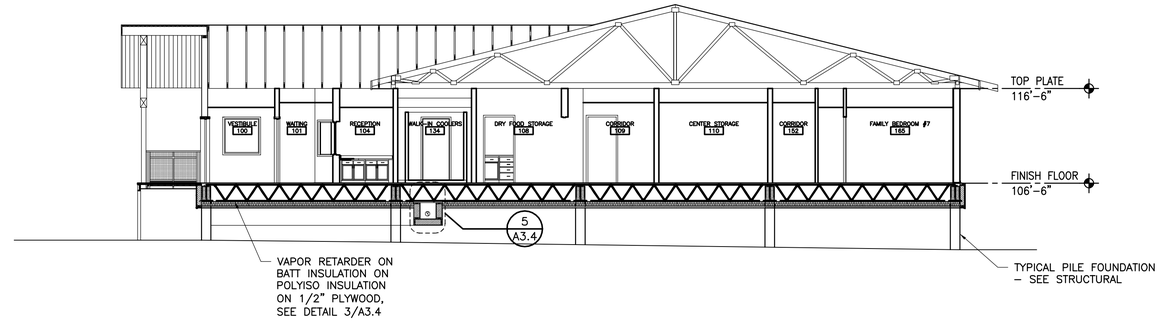

1 A3.4 BUILDING SECTION

SCALE: 1/8"=1'-0"

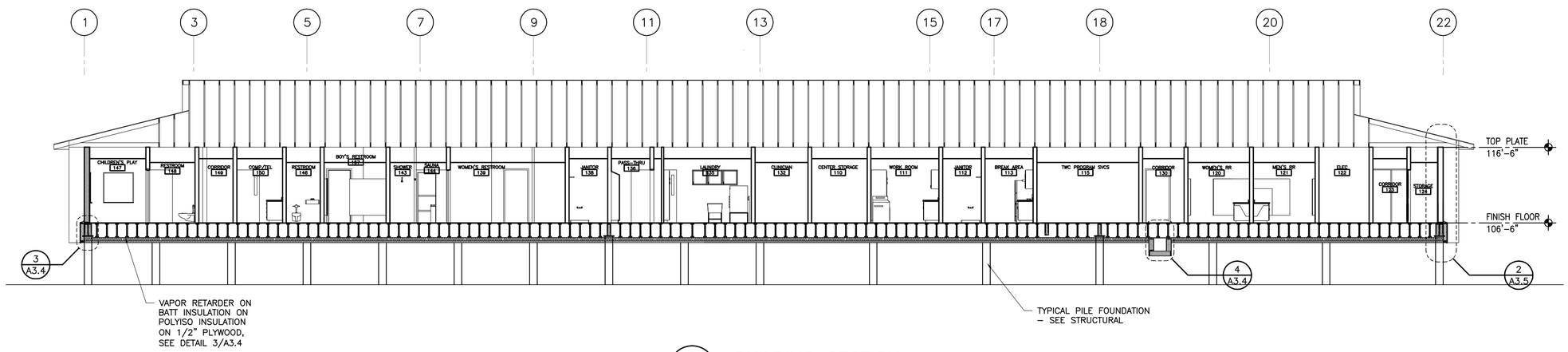

2 A3.4 BUILDING SECTION

SCALE: 1/8"=1'-0"

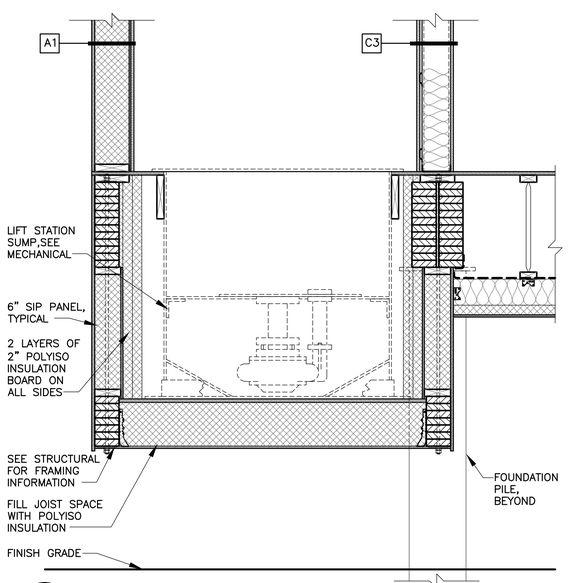

6 A3.4 SECTION AT LIFT STATION

SCALE: 3/4"=1'-0"

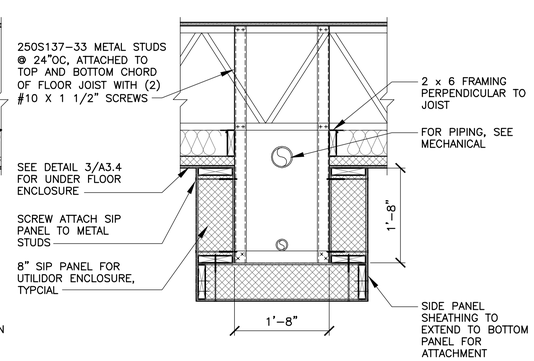

5 A3.4 UTILIDOR PARALLEL TO JOIST

SCALE: 3/4"=1'-0"

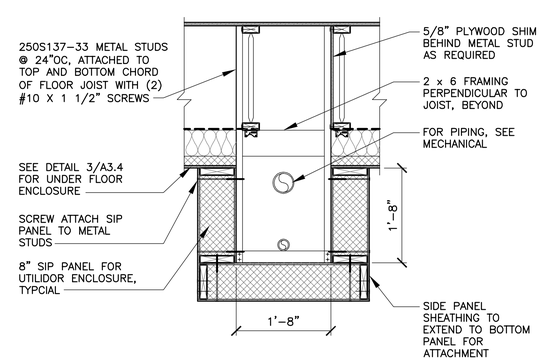

4 A3.4 UTILIDOR PERPENDICULAR TO JOIST

SCALE: 3/4"=1'-0"

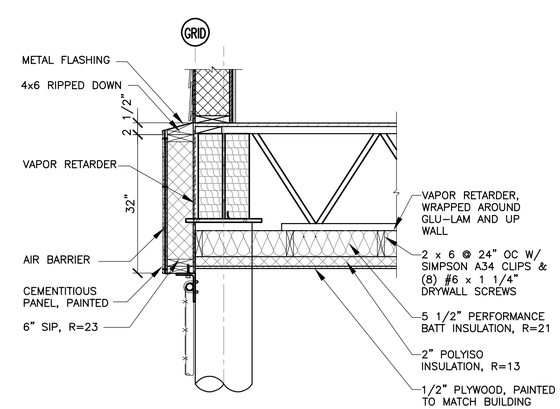

3 A3.4 TYP BUILDING SKIRT DETAIL

SCALE: 3/4"=1'-0"

DRAWING NAME: I:\1074400\Dwgs\A\sheets\1074400-A3_4.dwg PLOTTED: Apr 21, 2009 - 11:25am

STATE OF ALASKA 49TH
Gerald V. Neubert
No. A-4047
REGISTERED PROFESSIONAL ARCHITECT

Date Stamped: 04/21/09

Date	Revision	By

USKH

Architecture • Engineering

Land Surveying • Planning

2515 'A' Street
Anchorage, Alaska 99503
(907) 276-4245

544 4th Avenue, Suite 102
Fairbanks, Alaska 99701
(907) 452-2128

3031 Clinton Drive
Suite 200
Juneau, Alaska 99801
(907) 790-2901

351 W Parks Hwy, Suite 200
Wasilla, Alaska 99654
(907) 376-7815

Project:

DOMESTIC VIOLENCE SHELTER

TUNDRA WOMEN'S COALITION

P.O. BOX 2029
250 6th AVENUE
BETHEL, ALASKA 99559

Project Mgr.	JC	
Drawn	MAB	JC
Checked		
Date	21 APRIL 2009	

Sheet Contents:

BUILDING SECTIONS & DETAILS

Sheet No.:

A3.4

USKH W.O. 1074400

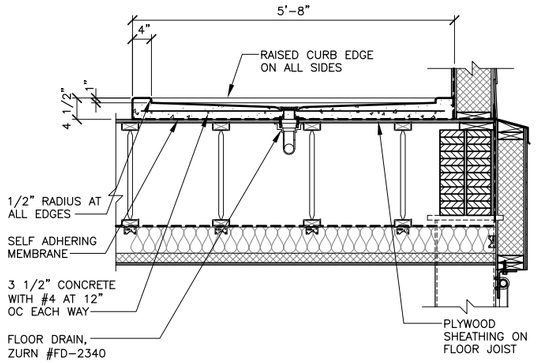

4 / A3.5 HOUSEKEEPING PAD DETAIL

SCALE: 3/4"=1'-0"

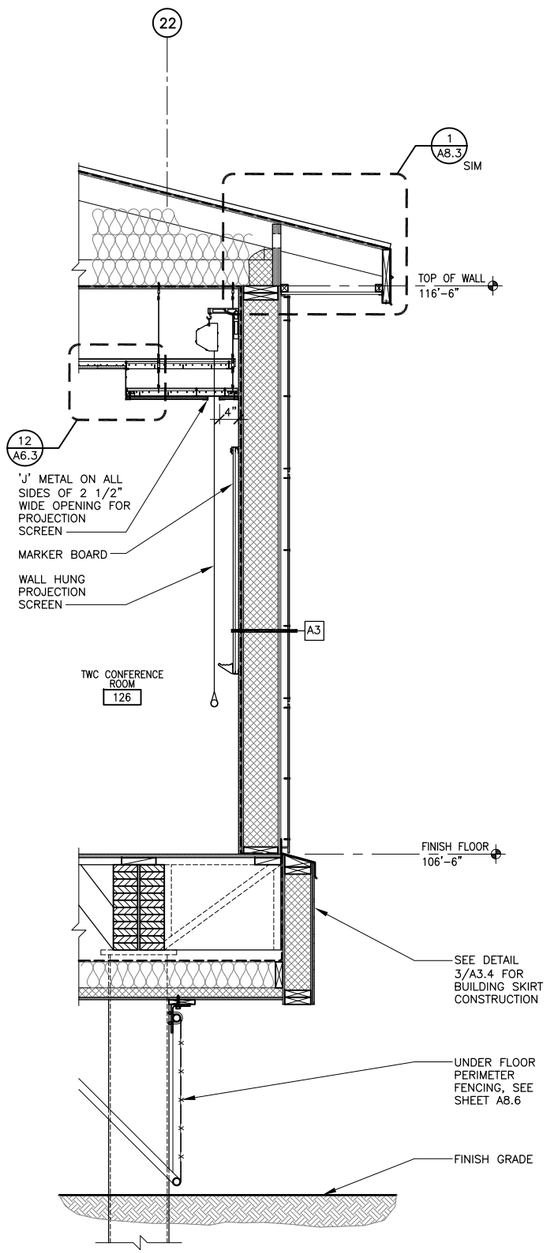

3 / A3.5 WALL SECTION

SCALE: 3/4"=1'-0"

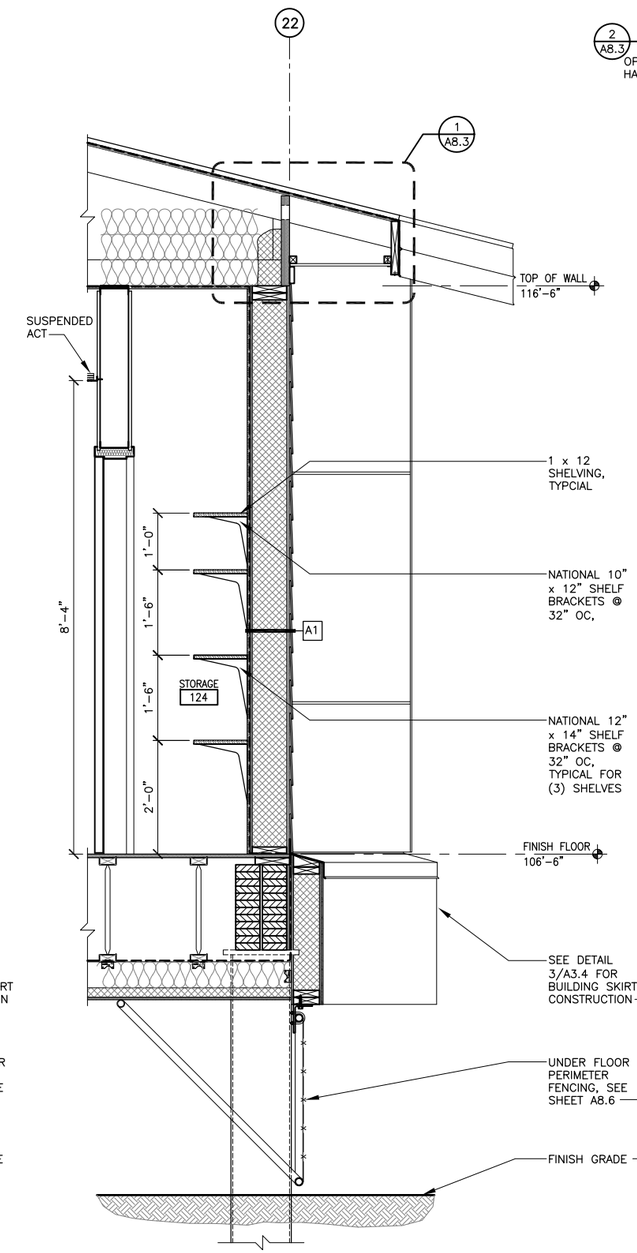

2 / A3.5 WALL SECTION

SCALE: 3/4"=1'-0"

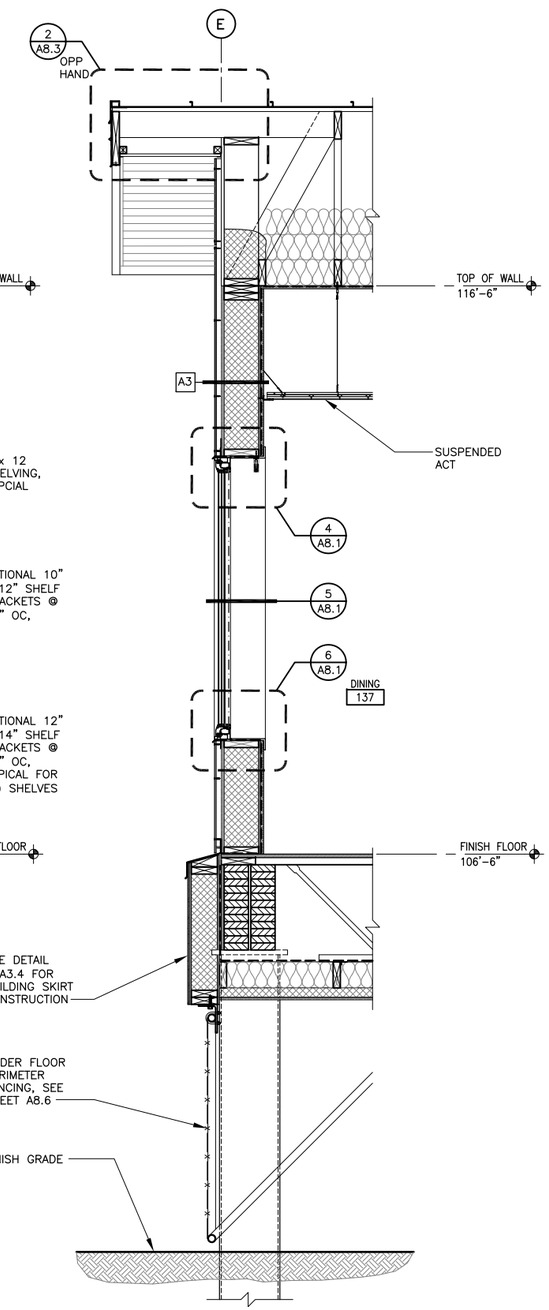

1 / A3.5 WALL SECTION

SCALE: 3/4"=1'-0"

STATE OF ALASKA 49TH
Gerald V. Neubert
No. A-4047
REGISTERED PROFESSIONAL ARCHITECT

Date Stamped: 04/21/09

Date	Revision	By

USKH

Architecture • Engineering
Land Surveying • Planning

2515 'A' Street
Anchorage, Alaska 99503
(907) 276-4245

544 4th Avenue, Suite 102
Fairbanks, Alaska 99701
(907) 452-2128

3031 Clinton Drive
Suite 200
Juneau, Alaska 99801
(907) 790-2901

351 W Parks Hwy, Suite 200
Wasilla, Alaska 99654
(907) 376-7815

Project:
DOMESTIC VIOLENCE SHELTER

TUNDRA WOMEN'S COALITION
P.O. BOX 2029
250 6th AVENUE
BETHEL, ALASKA 99559

Project Mgr.	JC	
Drawn	JLL	JAC
Checked		
Date	21 APRIL 2009	

Sheet Contents:
WALL SECTIONS

Sheet No.:
A3.5

USKH W.O. 1074400

DRAWING NAME: i:\1074400\Dwgs\A\sheets\1074400-A3_5.dwg PLOTTED: May 14, 2009 - 9:42am

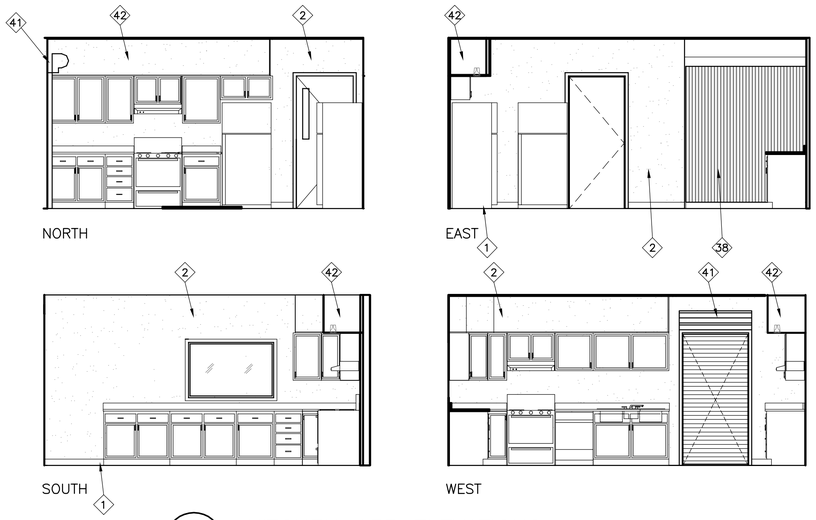

3 / A4.1 KITCHEN 133 ELEVATIONS

SCALE: 1/4"=1'-0"

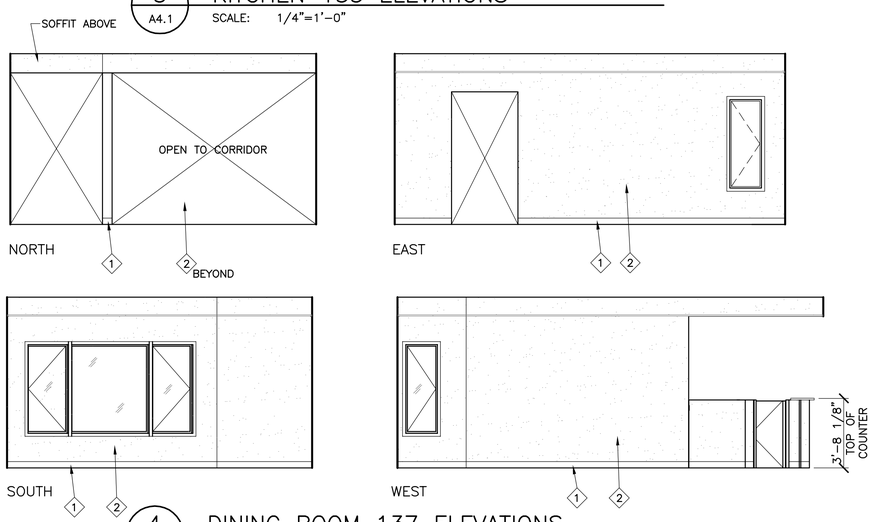

4 / A4.1 DINING ROOM 137 ELEVATIONS

SCALE: 1/4"=1'-0"

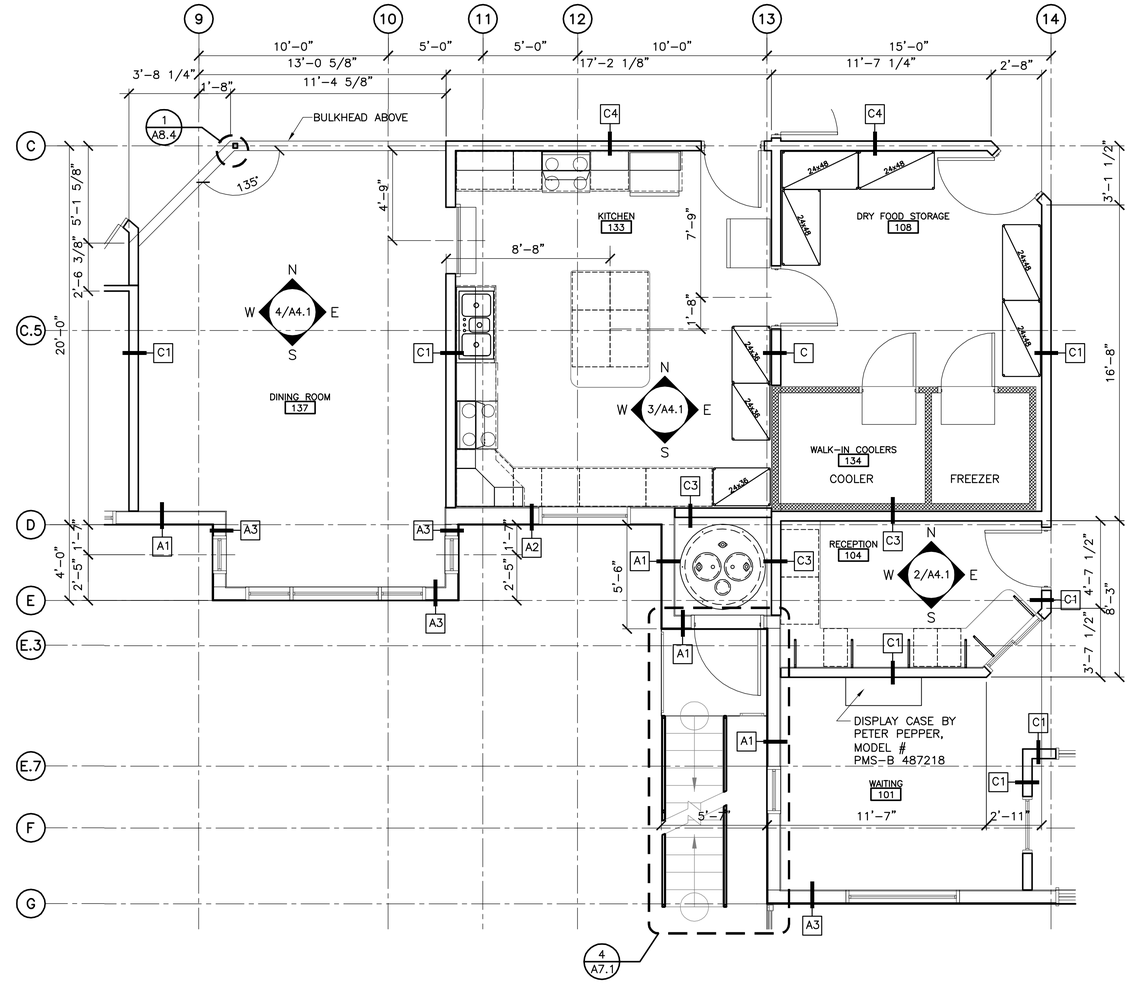

1 / A4.1 ENLARGED FLOOR PLAN

SCALE: 1/4"=1'-0"

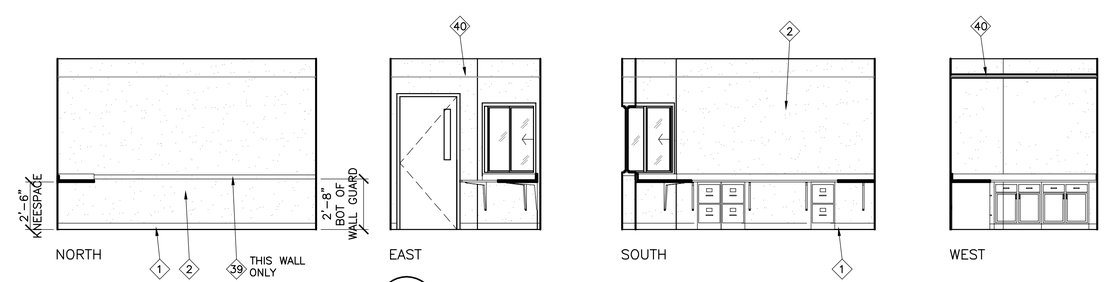

2 / A4.1 RECEPTION OFFICE 104 ELEVATIONS

SCALE: 1/4"=1'-0"

INTERIOR ELEVATION KEY NOTES

1. BASE, SEE FINISH SCHEDULE
2. GWB, SEE FINISH SCHEDULE
3. CERAMIC TILE, SEE FINISH SCHEDULE
4. CERAMIC TILE BASE, SEE FINISH SCHEDULE
5. FRP, SEE FINISH SCHEDULE
6. SELF-COVE BASE, SEE FINISH SCHEDULE
7. TACK BOARD, 4'H x 4'W
8. TACK BOARD, 4'H x 2'W
9. MARKER BOARD, 4'H x 8'W
10. MARKER BOARD, 4'H x 6'W
11. PROJECTION SCREEN, HIDDEN, MOUNTED IN CEILING
12. PROJECTION SCREEN, WALL MOUNTED, 4" FROM CEILING LINE
13. GB1, GRAB BAR, 24" LG
14. GB2, GRAB BAR, 36" LG
15. GB3, GRAB BAR, 18" LG
16. GB4, GRAB BAR, "L" SHAPE, 36" x 50"
17. NOT USED
18. DCS, DIAPER CHANGING STATION
19. PTD/WR, COMBINATION PAPER TOWEL DISPENSER W/ WASTE RECEPTACLE
20. PTD, PAPER TOWEL DISPENSER
21. WR, SEMI-RECESSED WASTE RECEPTACLE
22. MU, MIRROR UNIT, 24" x 36" OR 48" X 36"
23. TSC, TOILET SEAT COVER DISPENSER
24. SD, SOAP DISPENSER, WALL MOUNTED
25. SNV, SANITARY NAPKIN/TAMPON VENDOR
26. SND1, SANITARY NAPKIN DISPOSAL, WALL MOUNT
27. SND2, SANITARY NAPKIN DISPOSAL, DOUBLE SIDED, PARTITION MOUNT
28. TTD, TOILET TISSUE DISPENSER
29. TH, TOWEL HOOK
30. WC, WATER CLOSET
31. HCWC, HANICAPPED WATER CLOSET
32. U, URINAL
33. HCU, HANDICAPPED URINAL
34. MBH, MOP & BROOM HOLDER W/ SHELF
35. FSS, FOLDING SHOWER SEAT
36. SHOWER ROD & CURTAIN
37. HCLC, HANDICAPPED LAVATORY & CABINET
38. WALK-IN COMBO COOLER/FREEZER
39. WALL GUARD, SEE ROOM FINISH SCHEDULE
40. ACOUSTICAL CEILING TILE, SEE FINISH SCHEDULE
41. ROLL-UP DOOR, SEE DOOR SCHEDULE
42. SOFFIT AREA W/ DOWNLIGHTING, SEE ELECTRICAL
43. SAUNA KIT W/ HEATER & BENCHES
44. WALL MOUNTED BENCH
45. CERAMIC WALL TILE, W8 SEE ROOM FINISH SCHED.
46. CERAMIC WALL TILE, W9 SEE ROOM FINISH SCHED.
47. TOWEL HOLDER
48. RECESSED MEDICINE CABINET
49. SOAP DISH

STATE OF ALASKA 49TH Gerald V. Neubert No. A-4047 REGISTERED PROFESSIONAL ARCHITECT

Date Stamped: 04/21/09

Date	Revision	By

USKH
Architecture • Engineering
Land Surveying • Planning
2515 'A' Street
Anchorage, Alaska 99503
(907) 276-4245
544 4th Avenue, Suite 102
Fairbanks, Alaska 99701
(907) 452-2128
3031 Clinton Drive
Suite 200
Juneau, Alaska 99801
(907) 790-2901
351 W Parks Hwy, Suite 200
Wasilla, Alaska 99654
(907) 376-7815

Project:
DOMESTIC VIOLENCE SHELTER

TUNDRA WOMEN'S COALITION
P.O. BOX 2029
250 6th AVENUE
BETHEL, ALASKA 99559

Project Mgr.	JC	
Drawn	MAB	JC
Checked		
Date	21 APRIL 2009	

Sheet Contents:
ENLARGED FLOOR PLANS & INTERIOR ELEVATIONS

Sheet No.:
A4.1

USKH W.O. 1074400

DRAWING NAME: I:\1074400\Dwgs\A\sheets\1074400-A4_1.dwg PLOTTED: Apr 21, 2009 - 11:26am

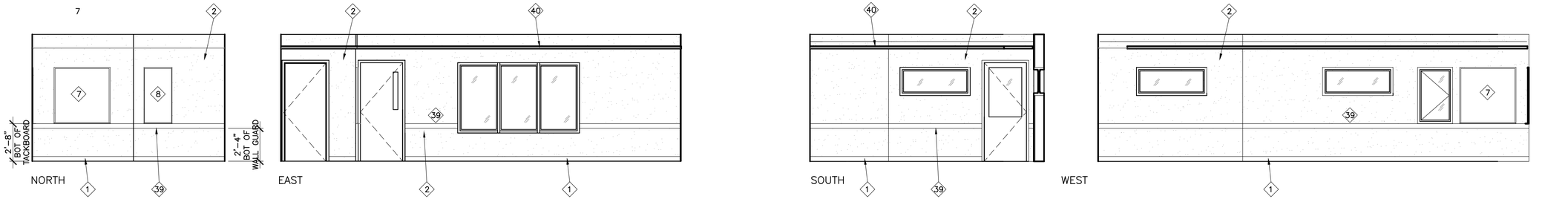

1 A4.2 CHILDREN'S PLAY AREA 147 ELEVATIONS
SCALE: 1/4"=1'-0"

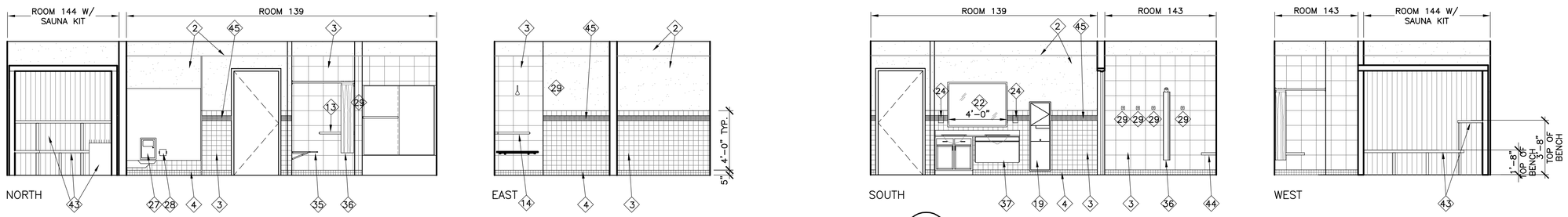

2 A4.2 WOMEN'S RESTROOM & SAUNA 139, 143, & 144 ELEVATIONS
SCALE: 1/4"=1'-0"

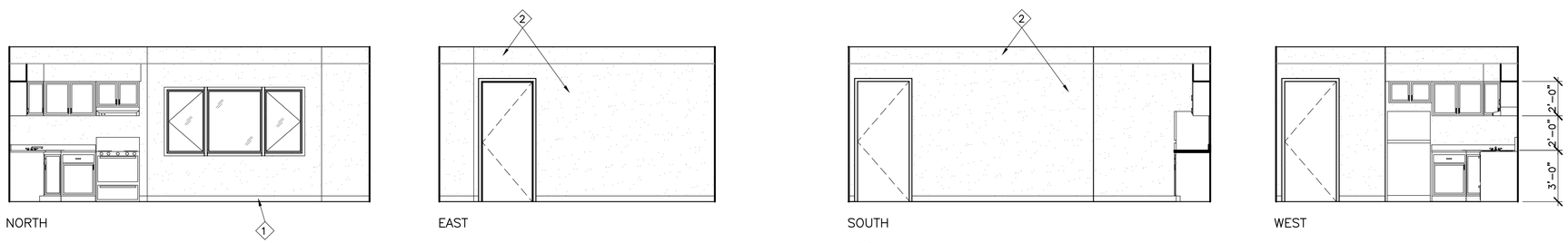

3 A4.2 FAMILY SUITE 159 ELEVATIONS
SCALE: 1/4"=1'-0"

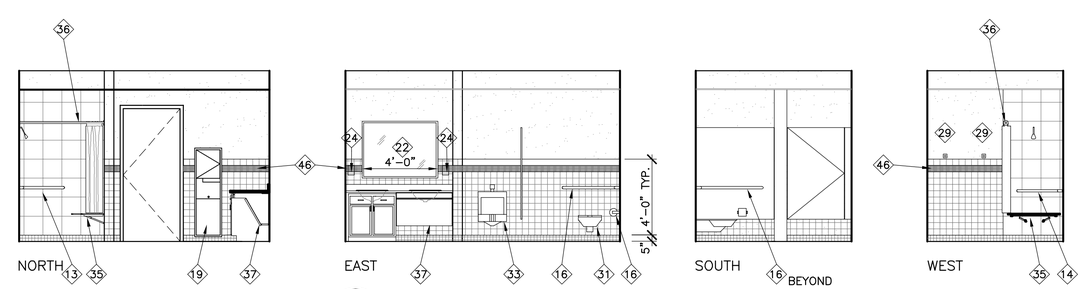

4 A4.2 BOY'S RESTROOM 157 ELEVATIONS
SCALE: 1/4"=1'-0"

INTERIOR ELEVATION KEY NOTES

1. BASE, SEE FINISH SCHEDULE
2. GWB, SEE FINISH SCHEDULE
3. CERAMIC TILE, SEE FINISH SCHEDULE
4. CERAMIC TILE BASE, SEE FINISH SCHEDULE
5. FRP, SEE FINISH SCHEDULE
6. SELF-COVE BASE, SEE FINISH SCHEDULE
7. TACK BOARD, 4'H x 4'W
8. TACK BOARD, 4'H x 2'W
9. MARKER BOARD, 4'H x 8'W
10. MARKER BOARD, 4'H x 6'W
11. PROJECTION SCREEN, HIDDEN, MOUNTED IN CEILING
12. PROJECTION SCREEN, WALL MOUNTED, 4" FROM CEILING LINE
13. GB1, GRAB BAR, 24" LG
14. GB2, GRAB BAR, 36" LG
15. GB3, GRAB BAR, 18" LG
16. GB4, GRAB BAR, "L" SHAPE, 36" x 50"
17. NOT USED
18. DCS, DIAPER CHANGING STATION
19. PTD/WR, COMBINATION PAPER TOWEL DISPENSER W/ WASTE RECEPTACLE
20. PTD, PAPER TOWEL DISPENSER
21. WR, SEMI-RECESSED WASTE RECEPTACLE
22. MU, MIRROR UNIT, 24" x 36" OR 48" X 36"
23. TSC, TOILET SEAT COVER DISPENSER
24. SD, SOAP DISPENSER, WALL MOUNTED
25. SNV, SANITARY NAPKIN/TAMPON VENDOR
26. SND1, SANITARY NAPKIN DISPOSAL, WALL MOUNT
27. SND2, SANITARY NAPKIN DISPOSAL, DOUBLE SIDED, PARTITION MOUNT
28. TTD, TOILET TISSUE DISPENSER
29. TH, TOWEL HOOK
30. WC, WATER CLOSET
31. HCWC, HANICAPPED WATER CLOSET
32. U, URINAL
33. HCU, HANDICAPPED URINAL
34. MBH, MOP & BROOM HOLDER W/ SHELF
35. FSS, FOLDING SHOWER SEAT
36. SHOWER ROD & CURTAIN
37. HCLC, HANDICAPPED LAVATORY & CABINET
38. WALK-IN COMBO COOLER/FREEZER
39. WALL GUARD, SEE ROOM FINISH SCHEDULE
40. ACOUSTICAL CEILING TILE, SEE FINISH SCHEDULE
41. ROLL-UP DOOR, SEE SCHEDULE
42. SOFFIT AREA W/ DOWNLIGHTING, SEE ELECTRICAL
43. SAUNA KIT W/ HEATER & BENCHES
44. WALL MOUNTED BENCH
45. CERAMIC WALL TILE, W8 SEE ROOM FINISH SCHED.
46. CERAMIC WALL TILE, W9 SEE ROOM FINISH SCHED.
47. TOWEL HOLDER
48. RECESSED MEDICINE CABINET
49. SOAP DISH

STATE OF ALASKA 49TH
Gerald V. Neubert
No. A-4047
REGISTERED PROFESSIONAL ARCHITECT

Date Stamped: 04/21/09

Date	Revision	By

USKH
Architecture • Engineering
Land Surveying • Planning

2515 'A' Street
Anchorage, Alaska 99503
(907) 276-4245

544 4th Avenue, Suite 102
Fairbanks, Alaska 99701
(907) 452-2128

3031 Clinton Drive
Suite 200
Juneau, Alaska 99801
(907) 790-2901

351 W Parks Hwy, Suite 200
Wasilla, Alaska 99654
(907) 376-7815

Project:
DOMESTIC VIOLENCE SHELTER

TUNDRA WOMEN'S COALITION
P.O. BOX 2029
250 6th AVENUE
BETHEL, ALASKA 99559

Project Mgr.	JC	
Drawn	MAB	JC
Checked		
Date	21 APRIL 2009	

Sheet Contents:
INTERIOR ELEVATIONS

Sheet No.:
A4.2

USKH W.O. 1074400

DRAWING NAME: I:\1074400\Dwgs\A\sheets\1074400-A4_2.dwg PLOTTED: Apr 21, 2009 - 11:28am

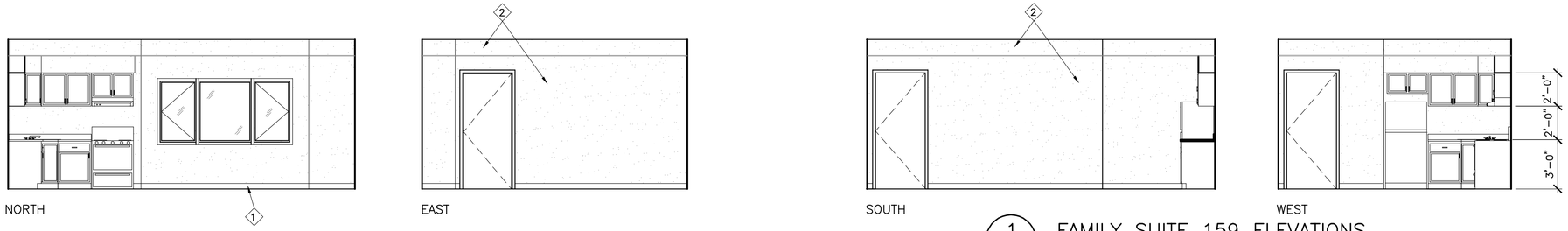

1 A4.3 FAMILY SUITE 159 ELEVATIONS
SCALE: 1/4"=1'-0"

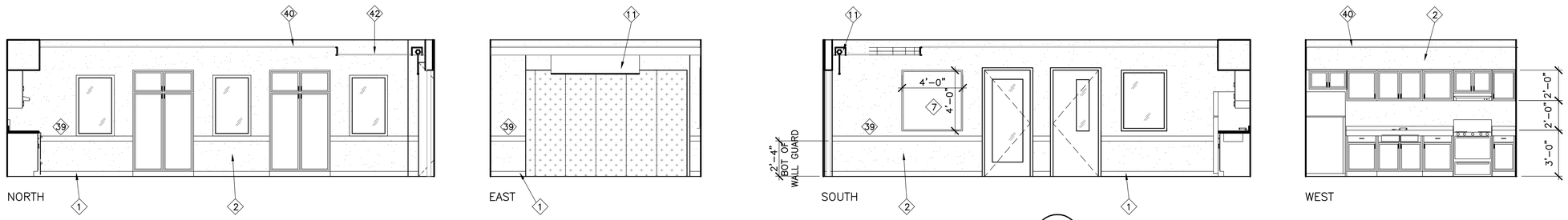

2 A4.3 TAAV CENTER 128 ELEVATIONS
SCALE: 1/4"=1'-0"

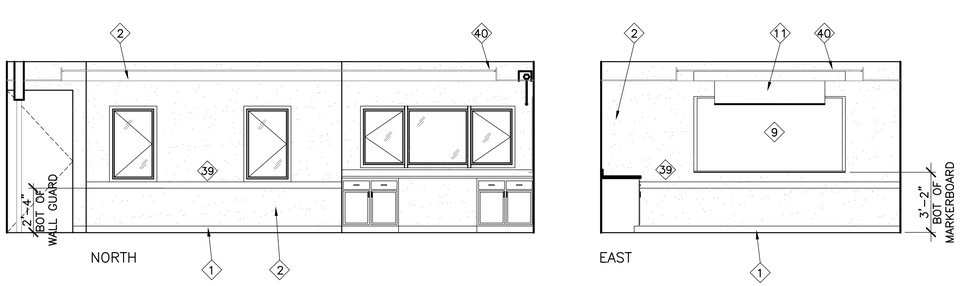

3 A4.3 TWC CONFERENCE ROOM 126 ELEVATIONS
SCALE: 1/4"=1'-0"

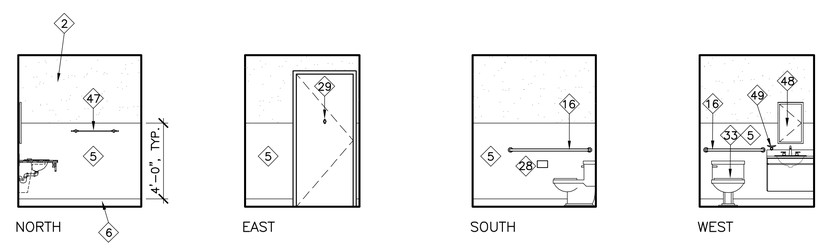

4 A4.3 RESTROOM 160 ELEVATIONS
SCALE: 1/4"=1'-0"

INTERIOR ELEVATION KEY NOTES

1. BASE, SEE FINISH SCHEDULE
2. GWB, SEE FINISH SCHEDULE
3. CERAMIC TILE, SEE FINISH SCHEDULE
4. CERAMIC TILE BASE, SEE FINISH SCHEDULE
5. FRP, SEE FINISH SCHEDULE
6. SELF-COVE BASE, SEE FINISH SCHEDULE
7. TACK BOARD, 4'H x 4'W
8. TACK BOARD, 4'H x 2'W
9. MARKER BOARD, 4'H x 8'W
10. MARKER BOARD, 4'H x 6'W
11. PROJECTION SCREEN, HIDDEN, MOUNTED IN CEILING
12. PROJECTION SCREEN, WALL MOUNTED, 4" FROM CEILING LINE
13. GB1, GRAB BAR, 24" LG
14. GB2, GRAB BAR, 36" LG
15. GB3, GRAB BAR, 18" LG
16. GB4, GRAB BAR, "L" SHAPE, 36" x 50"
17. NOT USED
18. DCS, DIAPER CHANGING STATION
19. PTD/WR, COMBINATION PAPER TOWEL DISPENSER W/ WASTE RECEPTACLE
20. PTD, PAPER TOWEL DISPENSER
21. WR, SEMI-RECESSED WASTE RECEPTACLE
22. MU, MIRROR UNIT, 24" x 36" OR 48" X 36"
23. TSC, TOILET SEAT COVER DISPENSER
24. SD, SOAP DISPENSER, WALL MOUNTED
25. SNV, SANITARY NAPKIN/TAMPON VENDOR
26. SND1, SANITARY NAPKIN DISPOSAL, WALL MOUNT
27. SND2, SANITARY NAPKIN DISPOSAL, DOUBLE SIDED, PARTITION MOUNT
28. TTD, TOILET TISSUE DISPENSER
29. TH, TOWEL HOOK
30. WC, WATER CLOSET
31. HCWC, HANICAPPED WATER CLOSET
32. U, URINAL
33. HCU, HANDICAPPED URINAL
34. MBH, MOP & BROOM HOLDER W/ SHELF
35. FSS, FOLDING SHOWER SEAT
36. SHOWER ROD & CURTAIN
37. HCLC, HANDICAPPED LAVATORY & CABINET
38. WALK-IN COMBO COOLER/FREEZER
39. WALL GUARD, SEE FINISH SCHEDULE
40. ACOUSTICAL CEILING TILE, SEE FINISH SCHEDULE
41. ROLL-UP DOOR, SEE SCHEDULE
42. SOFFIT AREA W/ DOWNLIGHTING, SEE ELECTRICAL
43. SAUNA KIT W/ HEATER & BENCHES
44. WALL MOUNTED BENCH
45. CERAMIC WALL TILE, W8 SEE ROOM FINISH SCHED.
46. CERAMIC WALL TILE, W9 SEE ROOM FINISH SCHED.
47. TOWEL HOLDER
48. RECESSED MEDICINE CABINET
49. SOAP DISH

STATE OF ALASKA 49TH
Gerald V. Neubert
No. A-4047
REGISTERED PROFESSIONAL ARCHITECT

Date Stamped: 04/21/09

Date	Revision	By

USKH
Architecture • Engineering
Land Surveying • Planning

2515 'A' Street
Anchorage, Alaska 99503
(907) 276-4245

544 4th Avenue, Suite 102
Fairbanks, Alaska 99701
(907) 452-2128

3031 Clinton Drive
Suite 200
Juneau, Alaska 99801
(907) 790-2901

351 W Parks Hwy, Suite 200
Wasilla, Alaska 99654
(907) 376-7815

Project:
DOMESTIC VIOLENCE SHELTER

TUNDRA WOMEN'S COALITION
P.O. BOX 2029
250 6th AVENUE
BETHEL, ALASKA 99559

Project Mgr.	JC	
Drawn	MAB	JC
Checked		
Date	21 APRIL 2009	

Sheet Contents:
INTERIOR ELEVATIONS

Sheet No.:
A4.3

USKH W.O. 1074400

DRAWING NAME: I:\1074400\Dwgs\A\sheets\1074400-A4_3.dwg PLOTTED: Apr 21, 2009 - 11:29am

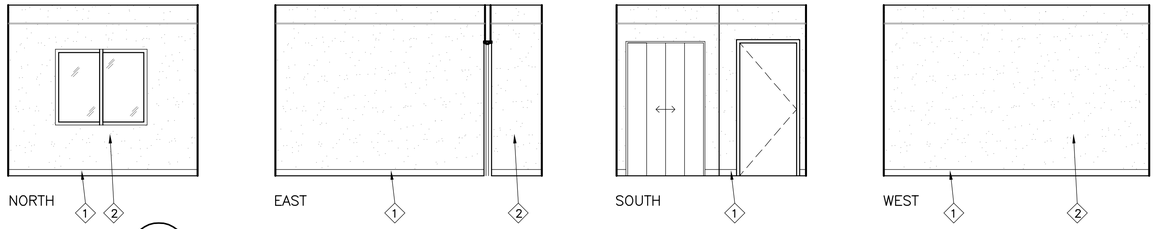

3 / A4.4 TYPICAL FAMILY BEDROOM ELEVATIONS

SCALE: 1/4"=1'-0"

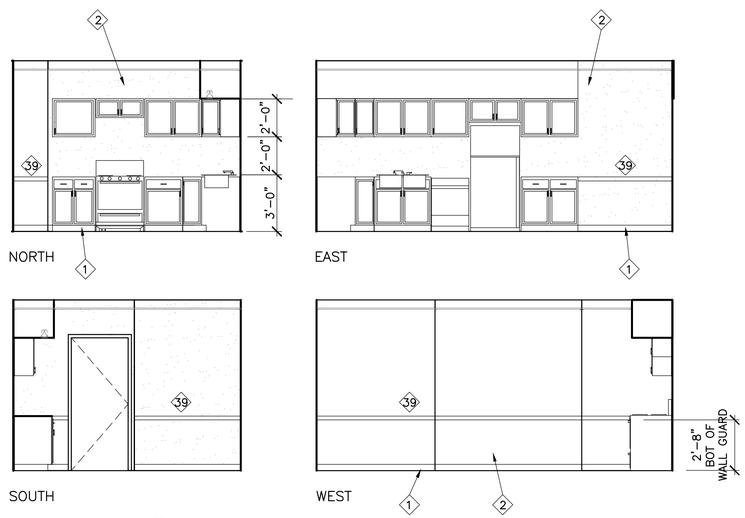

4 / A4.4 BREAK AREA 113 ELEVATIONS

SCALE: 1/4"=1'-0"

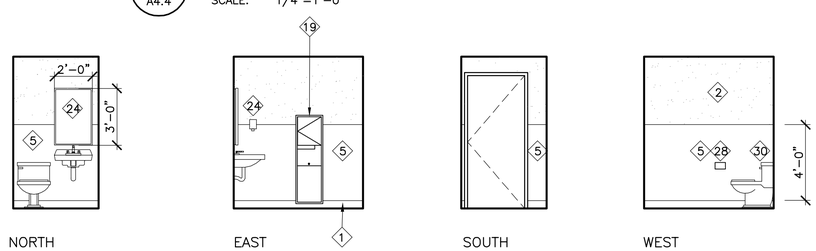

5 / A4.4 RESTROOMS 146 & 148 SIM ELEVATIONS

SCALE: 1/4"=1'-0"

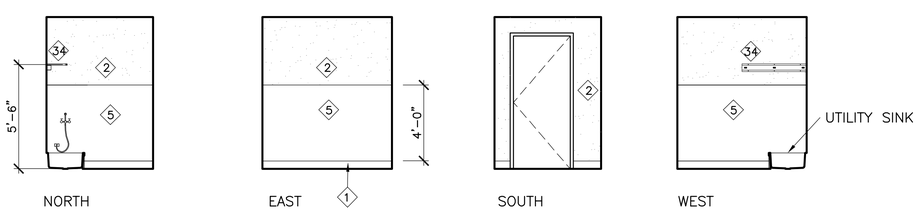

6 / A4.4 JANITOR CLOSETS 138 & 112 SIM ELEVATIONS

SCALE: 1/4"=1'-0"

INTERIOR ELEVATION KEY NOTES

1. BASE, SEE FINISH SCHEDULE
2. GWB, SEE FINISH SCHEDULE
3. CERAMIC TILE, SEE FINISH SCHEDULE
4. CERAMIC TILE BASE, SEE FINISH SCHEDULE
5. FRP, SEE FINISH SCHEDULE
6. SELF-COVE BASE, SEE FINISH SCHEDULE
7. TACK BOARD, 4'H x 4'W
8. TACK BOARD, 4'H x 2'W
9. MARKER BOARD, 4'H x 8'W
10. MARKER BOARD, 4'H x 6'W
11. PROJECTION SCREEN, HIDDEN, MOUNTED IN CEILING
12. PROJECTION SCREEN, WALL MOUNTED, 4" FROM CEILING LINE
13. GB1, GRAB BAR, 24" LG
14. GB2, GRAB BAR, 36" LG
15. GB3, GRAB BAR, 18" LG
16. GB4, GRAB BAR, "L" SHAPE, 36" x 50"
17. NOT USED
18. DCS, DIAPER CHANGING STATION
19. PTD/WR, COMBINATION PAPER TOWEL DISPENSER W/ WASTE RECEPTACLE
20. PTD, PAPER TOWEL DISPENSER
21. WR, SEMI-RECESSED WASTE RECEPTACLE
22. MU, MIRROR UNIT, 24" x 36" OR 48" X 36"
23. TSC, TOILET SEAT COVER DISPENSER
24. SD, SOAP DISPENSER, WALL MOUNTED
25. SNV, SANITARY NAPKIN/TAMPON VENDOR
26. SND1, SANITARY NAPKIN DISPOSAL, WALL MOUNT
27. SND2, SANITARY NAPKIN DISPOSAL, DOUBLE SIDED, PARTITION MOUNT
28. TTD, TOILET TISSUE DISPENSER
29. TH, TOWEL HOOK
30. WC, WATER CLOSET
31. HCWC, HANICAPPED WATER CLOSET
32. U, URINAL
33. HCU, HANDICAPPED URINAL
34. MBH, MOP & BROOM HOLDER W/ SHELF
35. FSS, FOLDING SHOWER SEAT
36. SHOWER ROD & CURTAIN
37. HCLC, HANDICAPPED LAVATORY & CABINET
38. WALK-IN COMBO COOLER/FREEZER
39. WALL GUARD, SEE FINISH SCHEDULE
40. ACOUSTICAL CEILING TILE, SEE FINISH SCHEDULE
41. ROLL-UP DOOR, SEE SCHEDULE
42. SOFFIT AREA W/ DOWNLIGHTING, SEE ELECTRICAL
43. SAUNA KIT W/ HEATER & BENCHES
44. WALL MOUNTED BENCH
45. CERAMIC WALL TILE, W8 SEE RM FINISH SCHED.
46. CERAMIC WALL TILE, W9 SEE RM FINISH SCHED.
47. TOWEL HOLDER
48. RECESSED MEDICINE CABINET
49. SOAP DISH

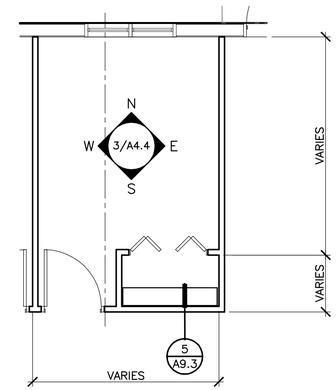

NOTE: THIS FAMILY BEDROOM PLAN IS SHOWN FOR TYPICAL FINISHES ONLY, AND DOES NOT REPRESENT THE OVERALL DIMENSIONS FOR ALL BEDROOM LAYOUTS. REFER TO ENLARGED PLANS A2.2 & A2.3 FOR DIMENSIONS OF INDIVIDUAL BEDROOMS.

1 / A4.4 ENLARGED FLOOR PLAN TYPICAL FAMILY BEDROOM

SCALE: 1/4"=1'-0"

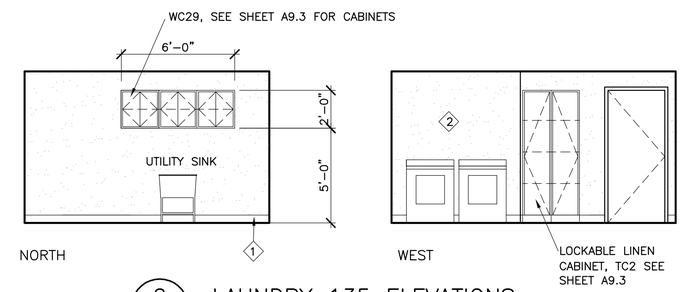

2 / A4.4 LAUNDRY 135 ELEVATIONS

SCALE: 1/4"=1'-0"

STATE OF ALASKA 49TH
Gerald V. Neubert
No. A-4047
REGISTERED PROFESSIONAL ARCHITECT

Date Stamped: 04/21/09

Date	Revision	By

USKH
Architecture • Engineering
Land Surveying • Planning

2515 'A' Street
Anchorage, Alaska 99503
(907) 276-4245

544 4th Avenue, Suite 102
Fairbanks, Alaska 99701
(907) 452-2128

3031 Clinton Drive
Suite 200
Juneau, Alaska 99801
(907) 790-2901

351 W Parks Hwy, Suite 200
Wasilla, Alaska 99654
(907) 376-7815

Project:
DOMESTIC VIOLENCE SHELTER

TUNDRA WOMEN'S COALITION
P.O. BOX 2029
250 6th AVENUE
BETHEL, ALASKA 99559

Project Mgr.	JC	
Drawn	MAB	JC
Checked		
Date	21 APRIL 2009	

Sheet Contents:
ENLARGED FLOOR PLANS & INTERIOR ELEVATIONS

Sheet No.:
A4.4

USKH W.O. 1074400

DRAWING NAME: I:\1074400\Dwgs\A\sheets\1074400-A4_4.dwg PLOTTED: Apr 21, 2009 - 11:35am

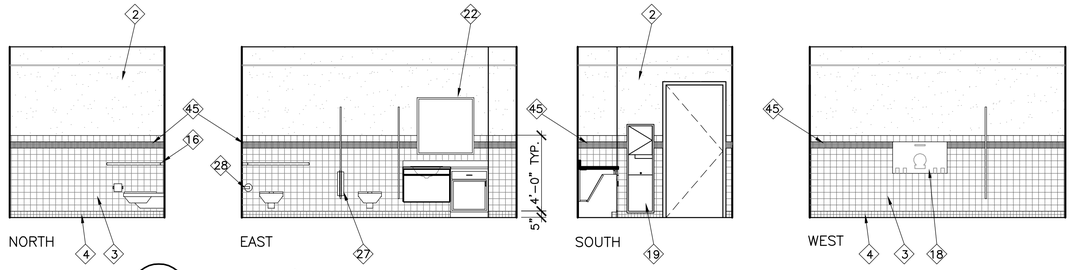

2 WOMEN'S RESTROOM 120 ELEVATIONS
A4.5 SCALE: 1/4"=1'-0"

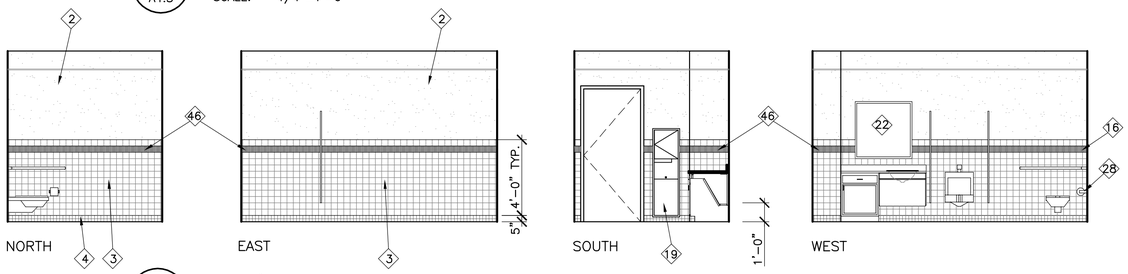

3 MEN'S RESTROOM 121 ELEVATIONS
A4.5 SCALE: 1/4"=1'-0"

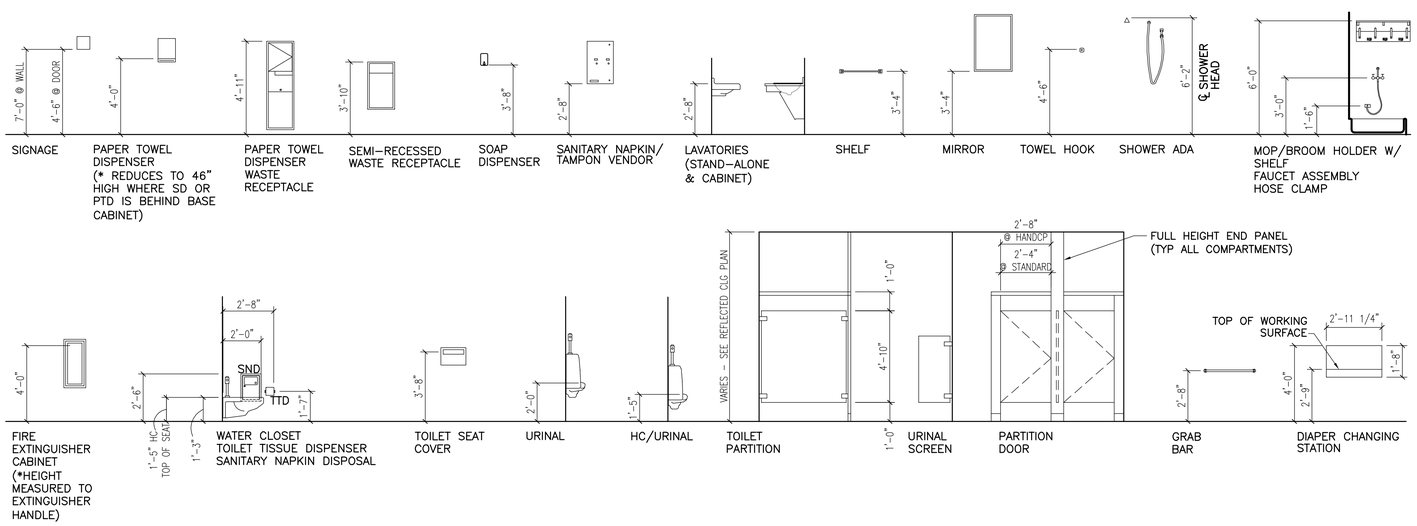

4 ACCESSORIES MOUNTING HEIGHTS SCHEDULE
A4.5 SCALE: 1/4"=1'-0"

INTERIOR ELEVATION KEY NOTES

1. BASE, SEE FINISH SCHEDULE
2. GWB, SEE FINISH SCHEDULE
3. CERAMIC TILE, SEE FINISH SCHEDULE
4. CERAMIC TILE BASE, SEE FINISH SCHEDULE
5. FRP, SEE FINISH SCHEDULE
6. SELF-COVE BASE, SEE FINISH SCHEDULE
7. TACK BOARD, 4'H x 4'W
8. TACK BOARD, 4'H x 2'W
9. MARKER BOARD, 4'H x 8'W
10. MARKER BOARD, 4'H x 6'W
11. PROJECTION SCREEN, HIDDEN, MOUNTED IN CEILING
12. PROJECTION SCREEN, WALL MOUNTED, 4" FROM CEILING LINE
13. GB1, GRAB BAR, 24" LG
14. GB2, GRAB BAR, 36" LG
15. GB3, GRAB BAR, 18" LG
16. GB4, GRAB BAR, "L" SHAPE, 36" x 50"
17. NOT USED
18. DCS, DIAPER CHANGING STATION
19. PTD/WR, COMBINATION PAPER TOWEL DISPENSER W/ WASTE RECEPTACLE
20. PTD, PAPER TOWEL DISPENSER
21. WR, SEMI-RECESSED WASTE RECEPTACLE
22. MU, MIRROR UNIT, 24" x 36" OR 48" X 36"
23. TSC, TOILET SEAT COVER DISPENSER
24. SD, SOAP DISPENSER, WALL MOUNTED
25. SNV, SANITARY NAPKIN/TAMPON VENDOR
26. SND1, SANITARY NAPKIN DISPOSAL, WALL MOUNT
27. SND2, SANITARY NAPKIN DISPOSAL, DOUBLE SIDED, PARTITION MOUNT
28. TTD, TOILET TISSUE DISPENSER
29. TH, TOWEL HOOK
30. WC, WATER CLOSET
31. HCWC, HANICAPPED WATER CLOSET
32. U, URINAL
33. HCU, HANDICAPPED URINAL
34. MBH, MOP & BROOM HOLDER W/ SHELF
35. FSS, FOLDING SHOWER SEAT
36. SHOWER ROD & CURTAIN
37. HCLC, HANDICAPPED LAVATORY & CABINET
38. WALK-IN COMBO COOLER/FREEZER
39. WALL GUARD, SEE FINISH SCHEDULE
40. ACOUSTICAL CEILING TILE, SEE FINISH SCHEDULE
41. ROLL-UP DOOR, SEE SCHEDULE
42. SOFFIT AREA W/ DOWNLIGHTING, SEE ELECTRICAL
43. SAUNA KIT W/ HEATER & BENCHES
44. WALL MOUNTED BENCH
45. CERAMIC WALL TILE, W8 SEE RM FINISH SCHED.
46. CERAMIC WALL TILE, W9 SEE RM FINISH SCHED.
47. TOWEL HOLDER
48. RECESSED MEDICINE CABINET
49. SOAP DISH

STATE OF ALASKA 49TH Gerald V. Neubert No. A-4047 REGISTERED PROFESSIONAL ARCHITECT

Date Stamped: 04/21/09

Date	Revision	By

USKH
Architecture • Engineering
Land Surveying • Planning

2515 'A' Street
Anchorage, Alaska 99503
(907) 276-4245

544 4th Avenue, Suite 102
Fairbanks, Alaska 99701
(907) 452-2128

3031 Clinton Drive
Suite 200
Juneau, Alaska 99801
(907) 790-2901

351 W Parks Hwy, Suite 200
Wasilla, Alaska 99654
(907) 376-7815

Project:
DOMESTIC VIOLENCE SHELTER

TUNDRA WOMEN'S COALITION
P.O. BOX 2029
250 6th AVENUE
BETHEL, ALASKA 99559

Project Mgr.	JC	
Drawn	MAB	JC
Checked		
Date	21 APRIL 2009	

Sheet Contents:
INTERIOR ELEVATIONS

Sheet No.:
A4.5

USKH W.O. 1074400

DRAWING NAME: I:\1074400\Dwgs\A\sheets\1074400-A4_5.dwg PLOTTED: Apr 21, 2009 - 11:28am

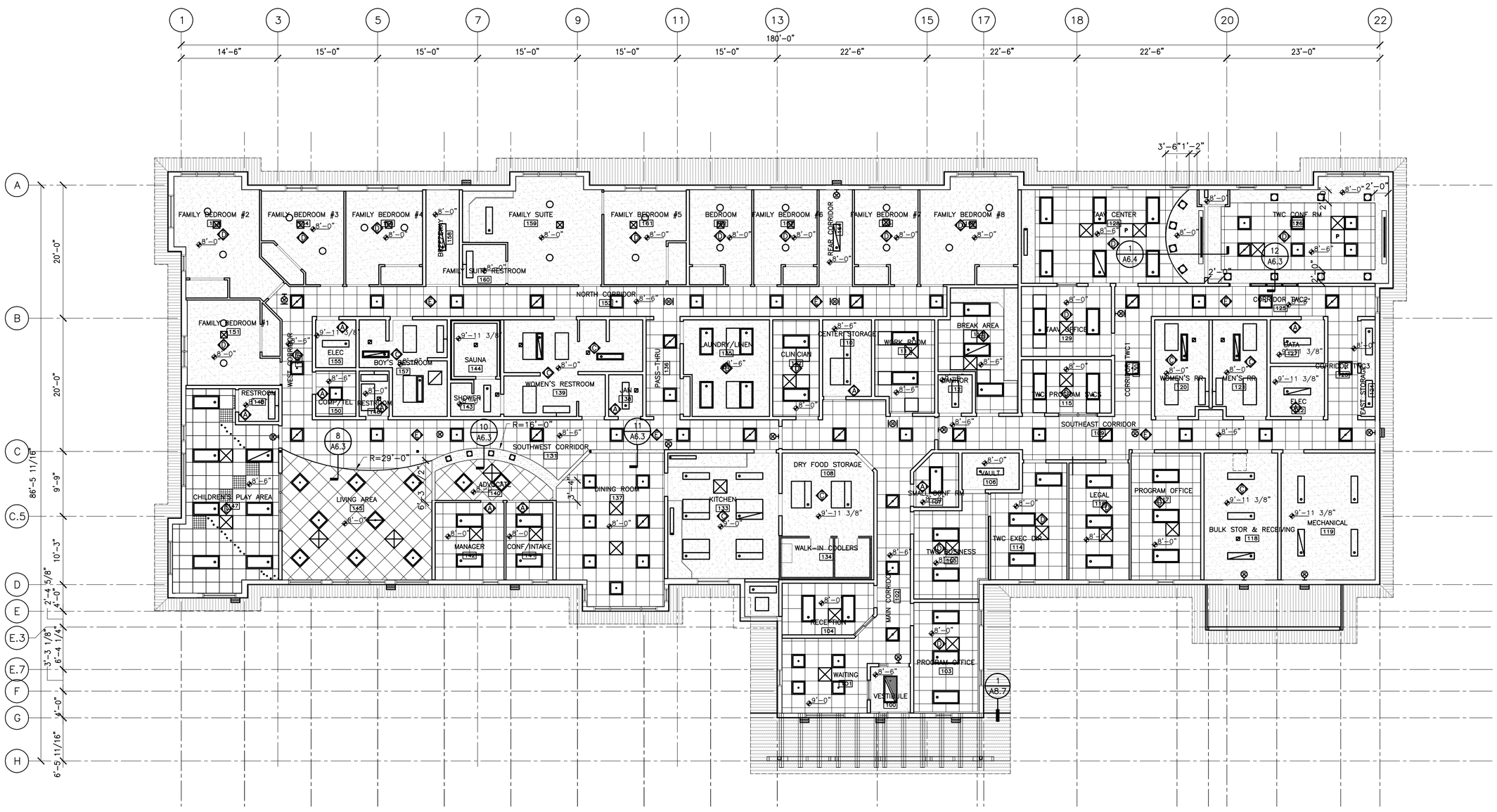

N

1 / A6.1 REFLECTED CEILING PLAN

SCALE: 1/8"=1'-0"

NOTES:

1. REFLECTED CEILING PLANS SHALL BE USED FOR LOCATING LIGHT FIXTURE AND EXPOSED FIXTURE AND EQUIPMENT POSITIONS ONLY. SEE MECHANICAL AND ELECTRICAL DRAWINGS FOR EXACT QUANTITY, TYPE, AND SIZE OF ALL RESPECTIVE FIXTURES AND/OR EQUIPMENT SHOWN.
2. SEE ROOM FINISH SCHEDULE FOR CEILING TYPE AND FINISH.

REFLECTED CEILING PLAN LEGEND

- SUSPENDED GYPSUM CEILING SYSTEM
- 2' X 2' SUSPENDED ACOUSTICAL TILE
- 2' X 2' SUSPENDED ACOUSTICAL TILE BY ARMSTRONG, CIRRUS THEMES CRITTER, #S512
- 2' X 2' SUSPENDED ACOUSTICAL TILE BY ARMSTRONG, CIRRUS THEMES CRITTER, #S510
- VINYL SOFFIT PANEL
- 2' X 2' SUSPENDED ACOUSTICAL TILE
- RADIANT CEILING PANELS (SEE MECH)
- DIFFUSER/GRILL (SEE MECH)
- SURFACE MOUNTED FLUORESCENT LIGHT FIXTURES
- RECESSED FLUORESCENT LIGHT FIXTURES
- UNDER COUNTER MOUNTED LIGTH FIXTURE
- WALL MOUNTED LIGHTS
- ELECTRICAL DEVICE, SEE ELECTRICAL
- EMER/EXIT LIGHTS
- P — PROJECTOR MOUNTING CEILING PANEL
- ABOVE CEILING MOUNTED PROJECTOR SCREEN
- ATTIC ACCESS, SEE DETAIL 9/A6.3
- 0" — ELEVATION OF FINISHED CEILING RELATIVE TO FLOOR ELEVATION

STATE OF ALASKA 49TH Gerald V. Neubert No. A-4047 REGISTERED PROFESSIONAL ARCHITECT

Date Stamped: 04/21/09

Date	Revision	By

USKH
Architecture • Engineering
Land Surveying • Planning

2515 'A' Street
Anchorage, Alaska 99503
(907) 276-4245

544 4th Avenue, Suite 102
Fairbanks, Alaska 99701
(907) 452-2128

3031 Clinton Drive
Suite 200
Juneau, Alaska 99801
(907) 790-2901

351 W Parks Hwy, Suite 200
Wasilla, Alaska 99654
(907) 376-7815

Project:

DOMESTIC VIOLENCE SHELTER

TUNDRA WOMEN'S COALITION

P.O. BOX 2029
250 6th AVENUE
BETHEL, ALASKA 99559

Project Mgr.	JC
Drawn	
Checked	
Date	21 APRIL 2009

Sheet Contents:

REFLECTED CEILING PLAN

Sheet No.:

A6.1

USKH W.O. 1074400

DRAWING NAME: I:\1074400\Dwgs\A\sheets\1074400-A6_1.dwg PLOTTED: Apr 21, 2009 - 11:18am

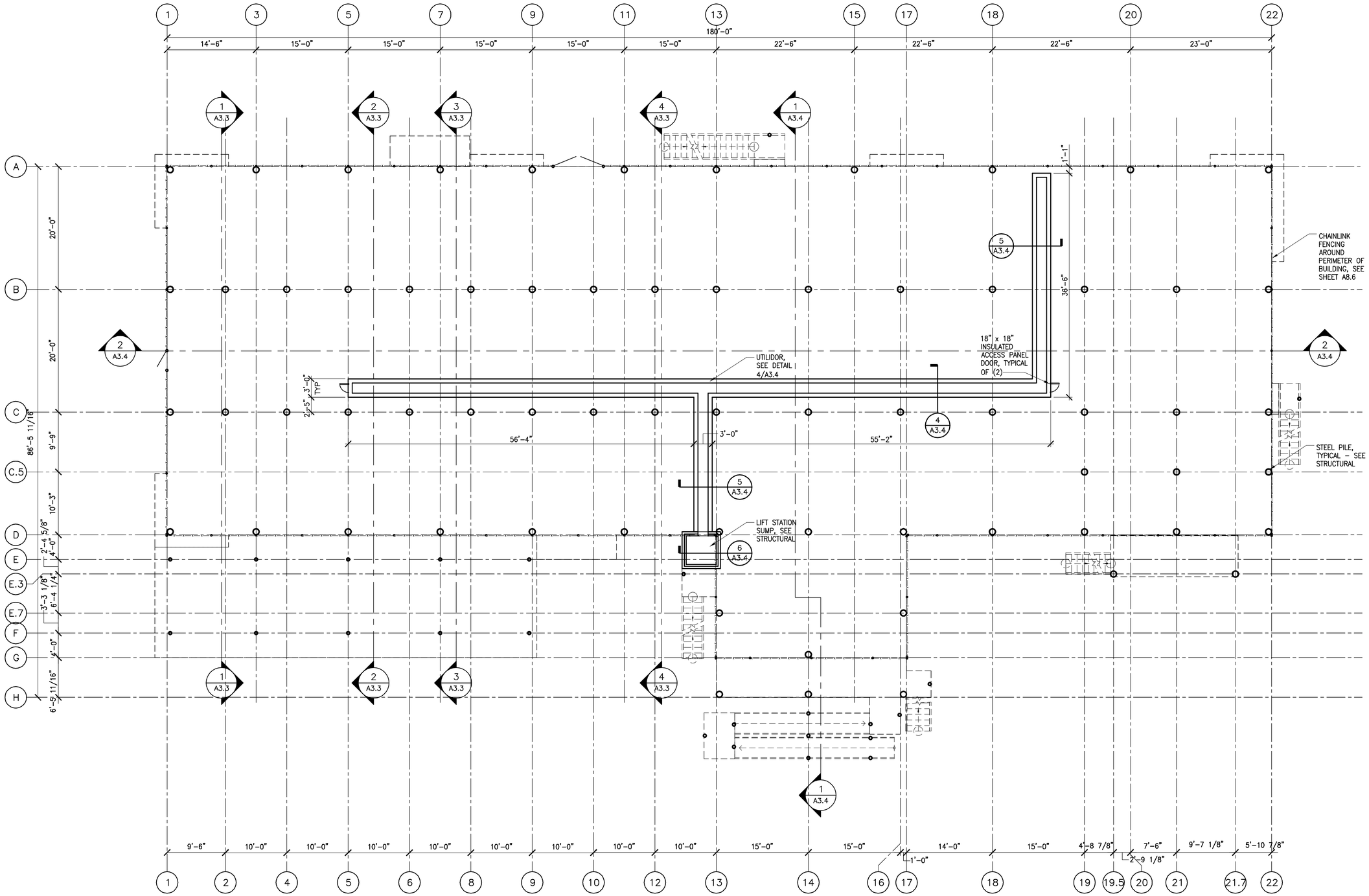

1 A6.2 CRAWLSPACE & UNDERFLOOR PLAN

SCALE: 1/8"=1'-0"

DRAWING NAME: I:\1074400\Dwgs\A\sheets\1074400-A6_2.dwg PLOTTED: Apr 21, 2009 - 11:17am

STATE OF ALASKA 49TH
Gerald V. Neubert
No. A-4047
REGISTERED PROFESSIONAL ARCHITECT

Date Stamped: 04/21/09

Date	Revision	By

USKH

Architecture • Engineering
Land Surveying • Planning

2515 'A' Street
Anchorage, Alaska 99503
(907) 276-4245

544 4th Avenue, Suite 102
Fairbanks, Alaska 99701
(907) 452-2128

3031 Clinton Drive
Suite 200
Juneau, Alaska 99801
(907) 790-2901

351 W Parks Hwy, Suite 200
Wasilla, Alaska 99654
(907) 376-7815

Project:

DOMESTIC VIOLENCE SHELTER

TUNDRA WOMEN'S COALITION

P.O. BOX 2029
250 6th AVENUE
BETHEL, ALASKA 99559

Project Mgr.	JC
Drawn	
Checked	
Date	21 APRIL 2009

Sheet Contents:

CRAWLSPACE & UNDERFLOOR UTILIDOR PLAN

Sheet No.:

A6.2

USKH W.O. 1074400

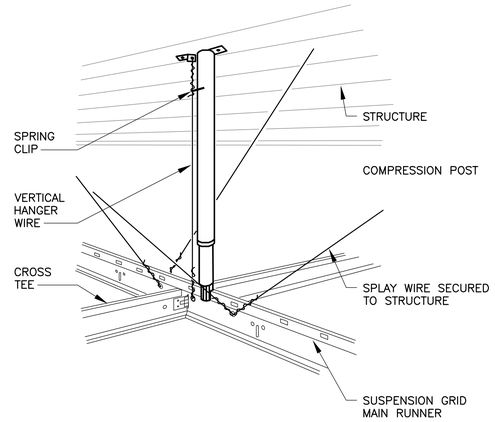

10 / A6.3 SOFFIT DETAIL AT ADVOCATE DESK
SCALE: 1 1/2"=1'-0"

7 / A6.3 SEISMIC PERSPECTIVE–COMPRESSION POST AND SPLAY WIRES
SCALE: 3"=1'-0"

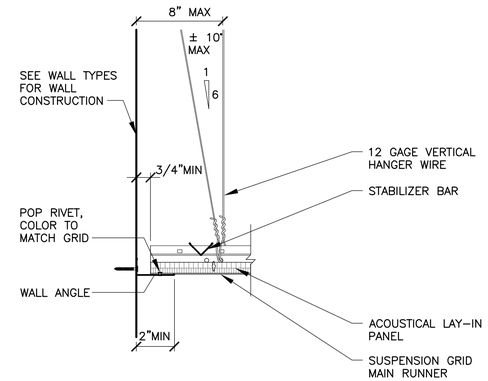

4 / A6.3 PERIMETER MAIN TEE DETAIL
SCALE: 3"=1'-0"

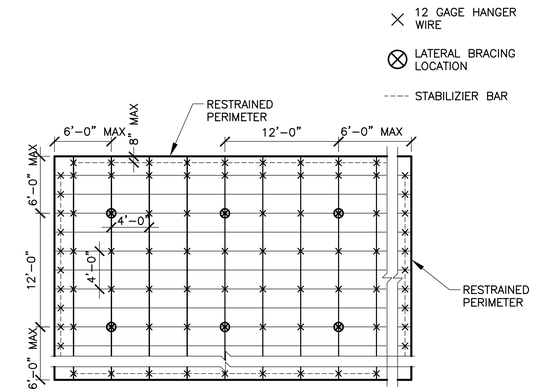

1 / A6.3 SEISMIC REFLECTED CEILING PLAN BRACING REQUIREMENTS
SCALE: 1/8"=1'-0"

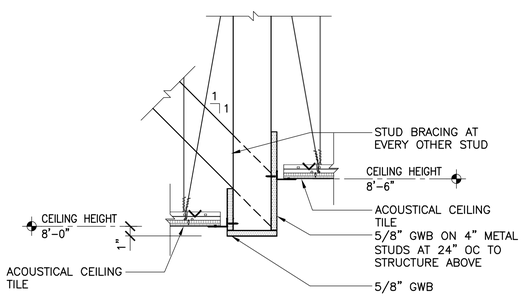

11 / A6.3 CEILING TRANSITION DETAIL
SCALE: 1 1/2"=1'-0"

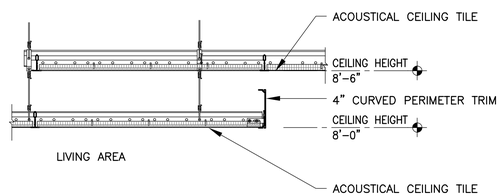

8 / A6.3 CEILING TRANSITION DETAIL @ LIVING
SCALE: 1 1/2"=1'-0"

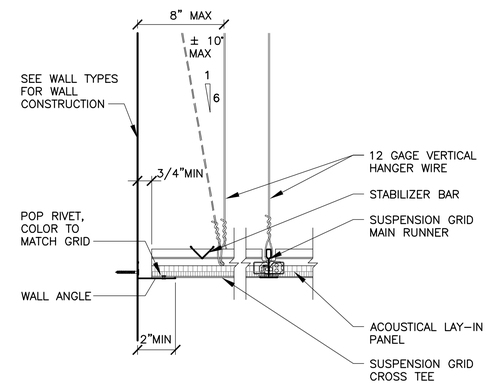

5 / A6.3 PERIMETER CROSS TEE DETAIL
SCALE: 3"=1'-0"

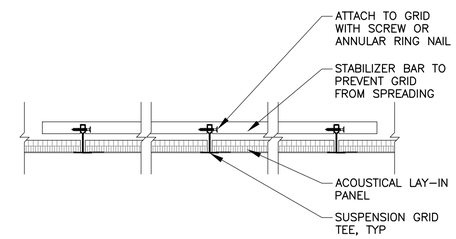

2 / A6.3 STABILIZER BAR DETAIL
SCALE: 3"=1'-0"

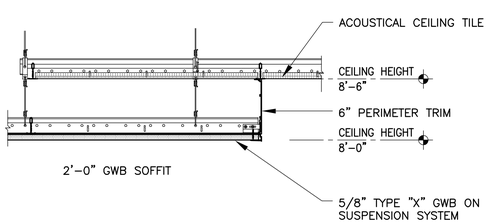

12 / A6.3 CEILING TRANSITION DETAIL
SCALE: 1 1/2"=1'-0"

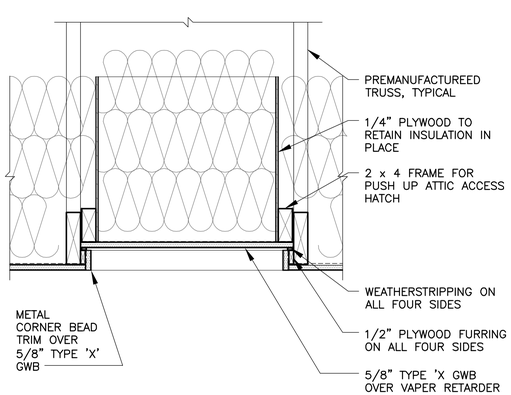

9 / A6.3 ATTIC ACCESS DETAIL
SCALE: 1 1/2"=1'-0"

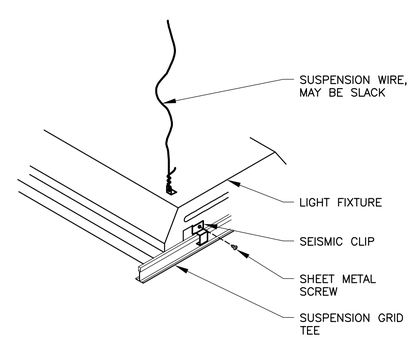

6 / A6.3 LIGHT FIXTURE ATTACHED TO GRID
SCALE: 1 1/2"=1'-0"

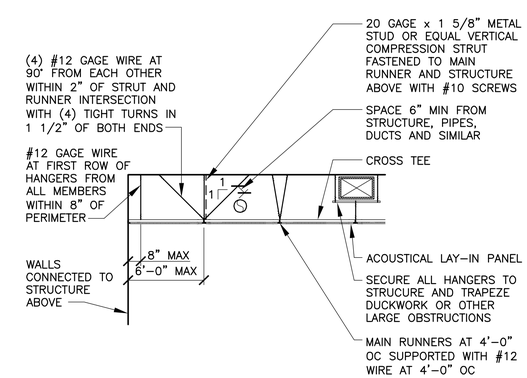

3 / A6.3 SUSPENDED ACOUSTICAL CEILING LATERAL BRACING DETAIL
SCALE: 1/4"=1'-0"

STATE OF ALASKA 49TH Gerald V. Neubert No. A-4047 REGISTERED PROFESSIONAL ARCHITECT

Date Stamped: 04/21/09

Date	Revision	By

USKH
Architecture • Engineering
Land Surveying • Planning

2515 'A' Street
Anchorage, Alaska 99503
(907) 276–4245

544 4th Avenue, Suite 102
Fairbanks, Alaska 99701
(907) 452–2128

3031 Clinton Drive
Suite 200
Juneau, Alaska 99801
(907) 790–2901

351 W Parks Hwy, Suite 200
Wasilla, Alaska 99654
(907) 376–7815

Project:
DOMESTIC VIOLENCE SHELTER

TUNDRA WOMEN'S COALITION
P.O. BOX 2029
250 6th AVENUE
BETHEL, ALASKA 99559

Project Mgr.	JC	
Drawn	JLL	JAC
Checked	JAC	
Date	21 APRIL 2009	

Sheet Contents:
CEILING DETAILS

Sheet No.:
A6.3

USKH W.O. 1074400

DRAWING NAME: I:\1074400\Dwgs\A\sheets\1074400-A6_3.dwg PLOTTED: Apr 21, 2009 – 11:16am

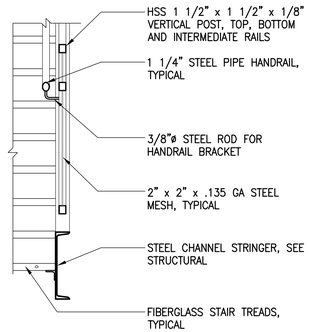

10 A7.1 STAIR GUARDRAIL/HANDRAIL DET
SCALE: 3/4"=1'-0"

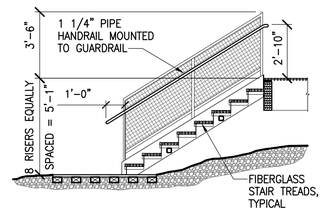

7 A7.1 STAIR SECTION
SCALE: 1/4"=1'-0"

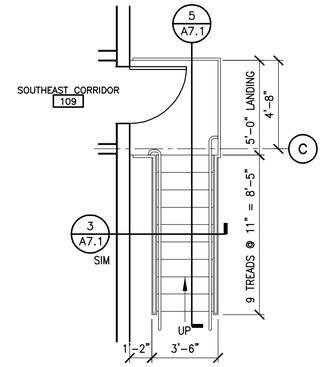

4 A7.1 ENLARGED STAIR PLAN
SCALE: 1/4"=1'-0"

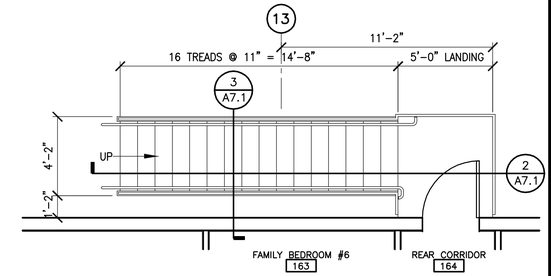

1 A7.1 ENLARGED STAIR PLAN
SCALE: 1/4"=1'-0"

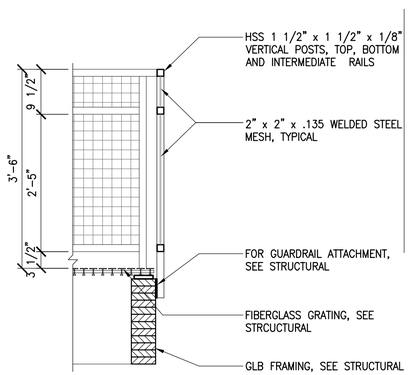

11 A7.1 LANDING RAILING DETAIL
SCALE: 3/4"=1'-0"

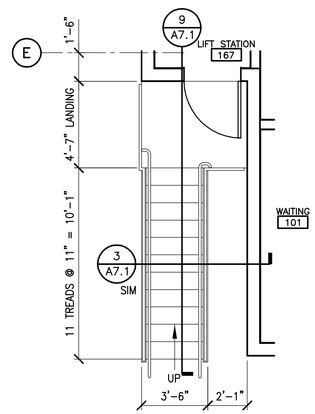

8 A7.1 ENLARGED STAIR PLAN
SCALE: 1/4"=1'-0"

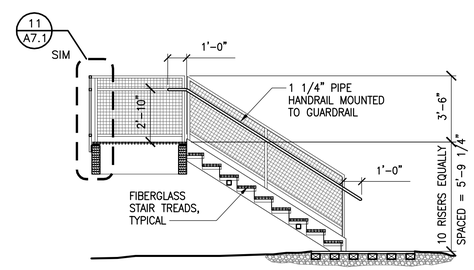

5 A7.1 STAIR SECTION
SCALE: 1/4"=1'-0"

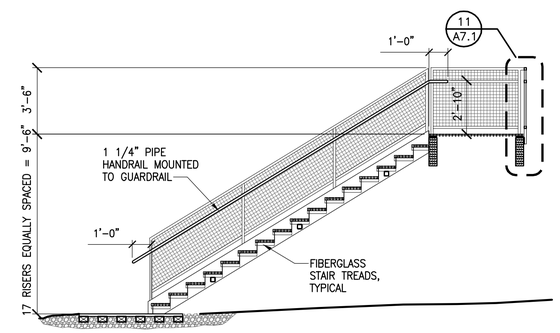

2 A7.1 STAIR SECTION
SCALE: 1/4"=1'-0"

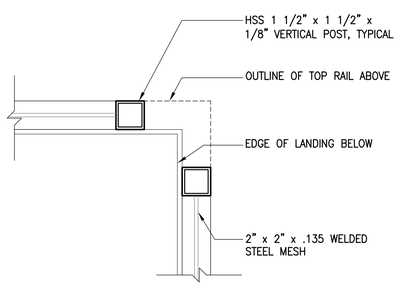

12 A7.1 TYPICAL GUARDRAIL AT OUTSIDE CORNER DETAIL
SCALE: 3/4"=1'-0"

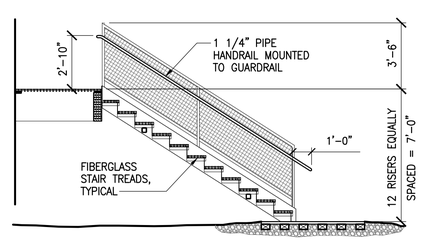

9 A7.1 STAIR SECTION
SCALE: 1/4"=1'-0"

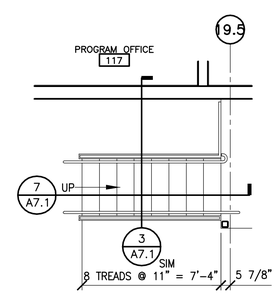

6 A7.1 ENLARGED STAIR PLAN
SCALE: 1/4"=1'-0"

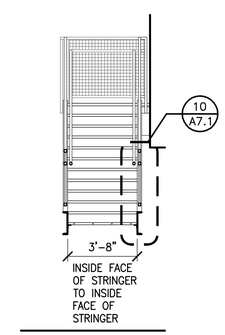

3 A7.1 STAIR SECTION
SCALE: 1/4"=1'-0"

STATE OF ALASKA 49TH Gerald V. Neubert No. A-4047 REGISTERED PROFESSIONAL ARCHITECT

Date Stamped: 04/21/09

Date	Revision	By

USKH
Architecture • Engineering
Land Surveying • Planning

2515 'A' Street
Anchorage, Alaska 99503
(907) 276-4245

544 4th Avenue, Suite 102
Fairbanks, Alaska 99701
(907) 452-2128

3031 Clinton Drive
Suite 200
Juneau, Alaska 99801
(907) 790-2901

351 W Parks Hwy, Suite 200
Wasilla, Alaska 99654
(907) 376-7815

Project:
DOMESTIC VIOLENCE SHELTER

TUNDRA WOMEN'S COALITION
P.O. BOX 2029
250 6th AVENUE
BETHEL, ALASKA 99559

Project Mgr.	JC
Drawn	JLL
Checked	
Date	21 APRIL 2009

Sheet Contents:
ENLARGED STAIR PLANS AND SECTIONS

Sheet No.:
A7.1

USKH W.O. 1074400

DRAWING NAME: I:\1074400\Dwgs\A\sheets\1074400-a7_1.dwg PLOTTED: Apr 21, 2009 - 11:27am

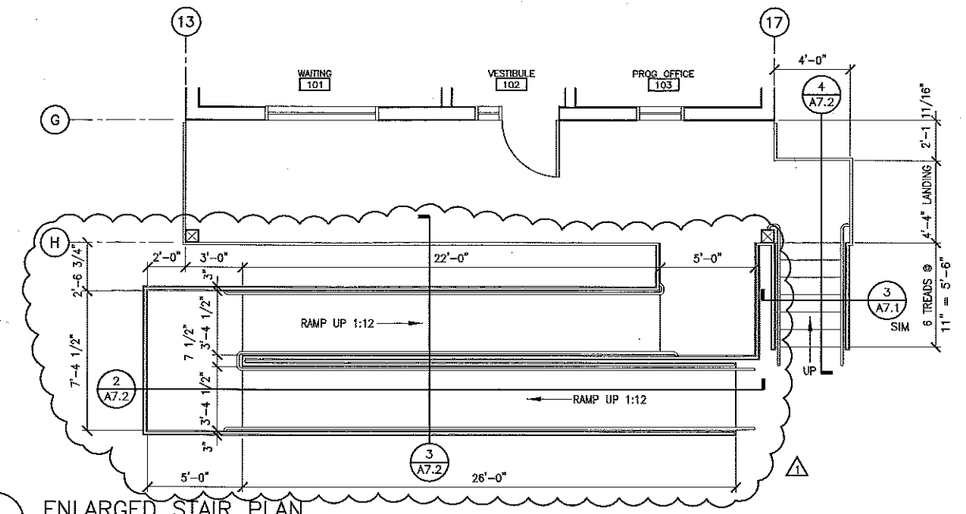

1 A7.2 ENLARGED STAIR PLAN

SCALE: 1/4"=1'-0"

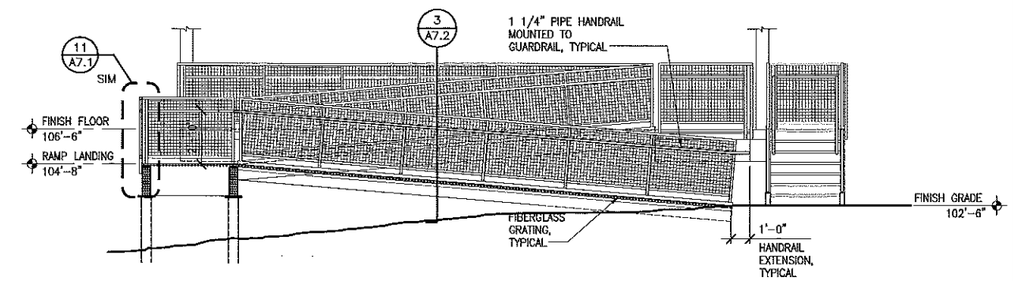

2 A7.2 RAMP SECTION

SCALE: 1/4"=1'-0"

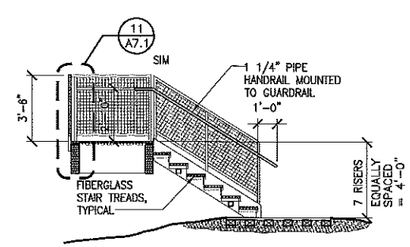

4 A7.2 STAIR SECTION

SCALE: 1/4"=1'-0"

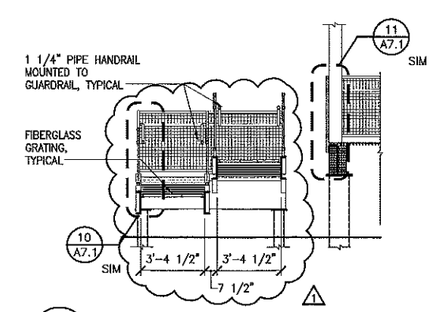

3 A7.2 RAMP SECTION

SCALE: 1/4"=1'-0"

STATE OF ALASKA 49TH
Gerald V. Neubert
No. A-4047
REGISTERED PROFESSIONAL ARCHITECT

Date Stamped: 04/21/09

Date	Revision	By
1 5/11/09	FIRE MARSHALL REVIEW COMMENTS	JLL

USKH

Architecture • Engineering

Land Surveying • Planning

2515 'A' Street
Anchorage, Alaska 99503
(907) 276-4245

544 4th Avenue, Suite 102
Fairbanks, Alaska 99701
(907) 452-2128

3031 Clinton Drive
Suite 200
Juneau, Alaska 99801
(907) 790-2901

351 W Parks Hwy, Suite 200
Wasilla, Alaska 99654
(907) 376-7815

Project:

DOMESTIC VIOLENCE SHELTER

TUNDRA WOMEN'S COALITION

P.O. BOX 2029
250 6th AVENUE
BETHEL, ALASKA 99559

Project Mgr.	JC	
Drawn	JLL	
Checked		
Date	21 APRIL 2009	

Sheet Contents:

ENLARGED STAIR AND RAMP – PLAN AND SECTIONS

Sheet No.:

A7.2

USKH W.O. 1074400

DRAWING NAME: I:\1074400\Dwgs\A\sheets\1074400-07_2.dwg PLOTTED: May 11, 2009 – 2:43pm

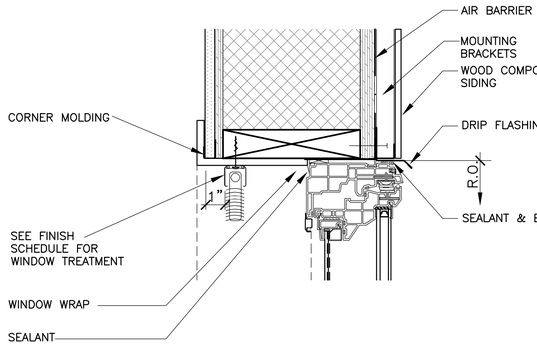

4 A8.1 WINDOW HEAD @ COMPOSITE SIDING
SCALE: 3"=1'-0"

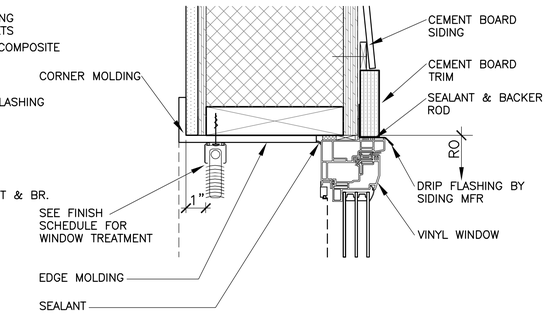

1 A8.1 WINDOW HEAD @ CEMENT PANEL
SCALE: 3"=1'-0"

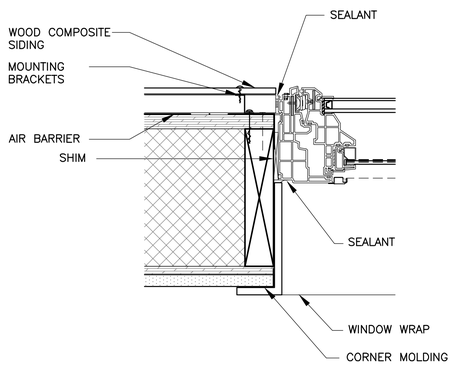

5 A8.1 WINDOW JAMB @ COMPOSITE SIDING
SCALE: 3"=1'-0"

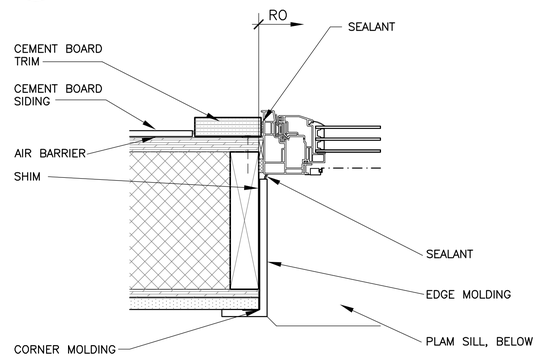

2 A8.1 WINDOW JAMB @ CEMENT PANEL
SCALE: 3"=1'-0"

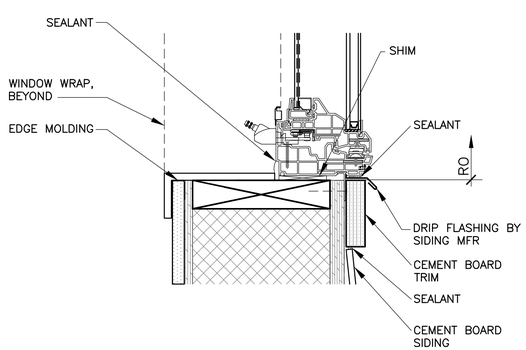

9 A8.1 WINDOW SILL @ CEMENT PANEL
SCALE: 3"=1'-0"

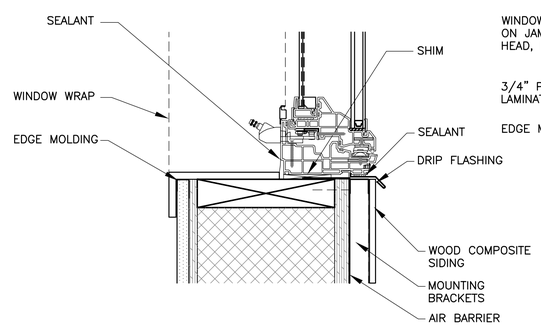

6 A8.1 WINDOW SILL @ COMPOSITE SIDING
SCALE: 3"=1'-0"

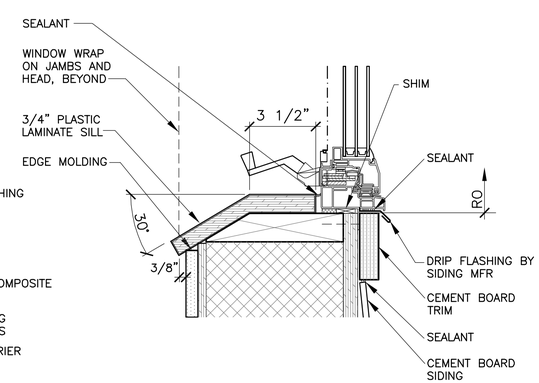

3 A8.1 TYP. WINDOW SILL @ BEDROOMS
SCALE: 3"=1'-0"

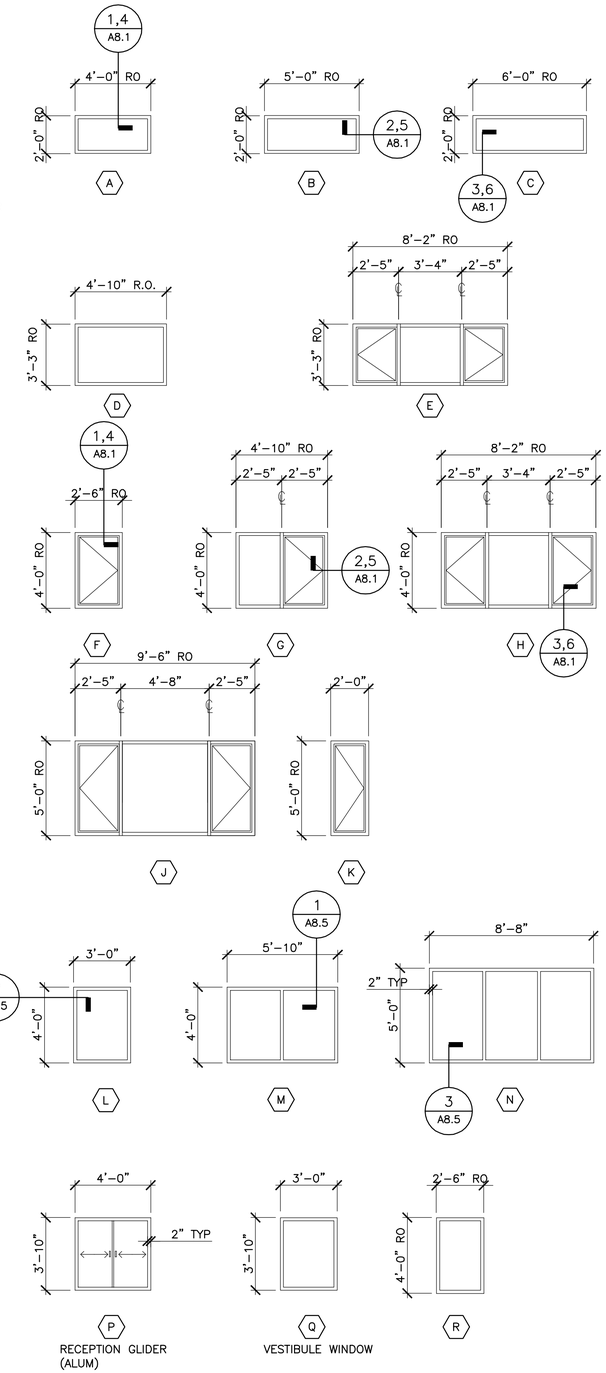

WINDOW TYPES SCHEDULE

STATE OF ALASKA 49TH
Gerald V. Neubert
No. A-4047
REGISTERED PROFESSIONAL ARCHITECT

Date Stamped: 04/21/09

Date	Revision	By

USKH

Architecture • Engineering
Land Surveying • Planning

2515 'A' Street
Anchorage, Alaska 99503
(907) 276-4245

544 4th Avenue, Suite 102
Fairbanks, Alaska 99701
(907) 452-2128

3031 Clinton Drive
Suite 200
Juneau, Alaska 99801
(907) 790-2901

351 W Parks Hwy, Suite 200
Wasilla, Alaska 99654
(907) 376-7815

Project:
DOMESTIC VIOLENCE SHELTER

TUNDRA WOMEN'S COALITION
P.O. BOX 2029
250 6th AVENUE
BETHEL, ALASKA 99559

Project Mgr.	JC
Drawn	TDB
Checked	
Date	21 APRIL 2009

Sheet Contents:
WINDOW TYPES & WINDOW DETAILS

Sheet No.:
A8.1

USKH W.O. 1074400

DRAWING NAME: I:\1074400\Dwgs\A\sheets\1074400-A8_1.dwg PLOTTED: Apr 21, 2009 - 11:25am

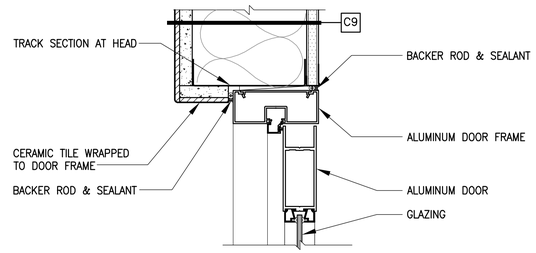

7 A8.2 ALUM DOOR HEAD
SCALE: 3"=1'-0"

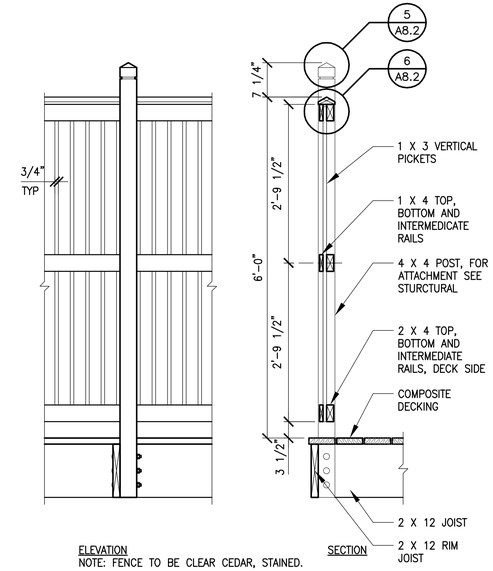

NOTE: FENCE TO BE CLEAR CEDAR, STAINED.

4 A8.2 PLAY DECK FENCE DETAIL
SCALE: 3/4"=1'-0"

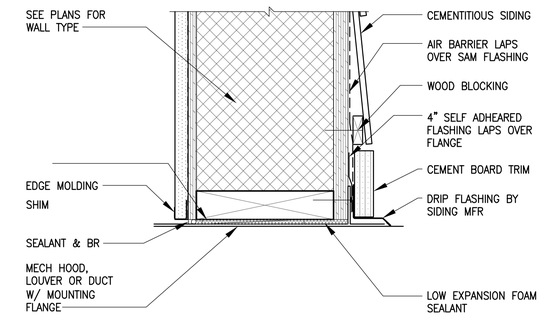

1 A8.2 HOOD/LOUVER HEAD
SCALE: 3"=1'-0"

10 A8.2 WOOD COMPOSITE SIDING INSIDE CORNER DETAIL
SCALE: 3"=1'-0"

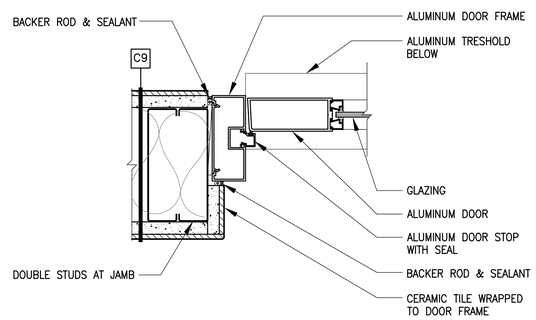

8 A8.2 ALUM DOOR JAMB
SCALE: 3"=1'-0"

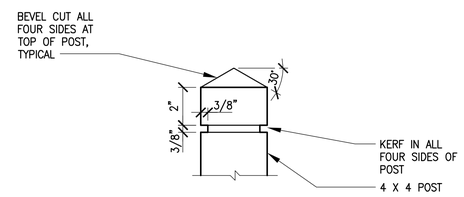

5 A8.2 PLAY DECK POST TOP DETAIL
SCALE: 3"=1'-0"

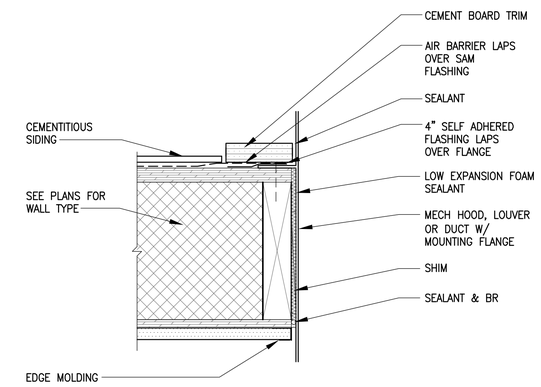

2 A8.2 HOOD/LOUVER JAMB
SCALE: 3"=1'-0"

11 A8.2 WOOD COMPOSITE SIDING OUTSIDE CORNER DETAIL
SCALE: 3"=1'-0"

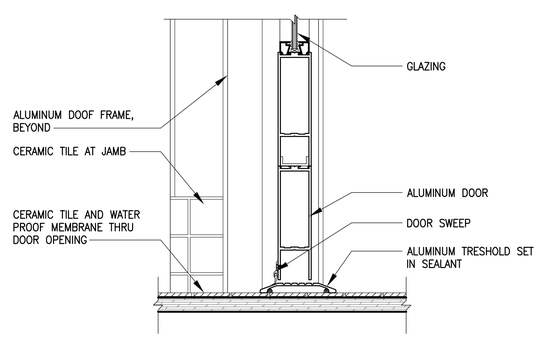

9 A8.2 ALUM DOOR THRESHOLD
SCALE: 3"=1'-0"

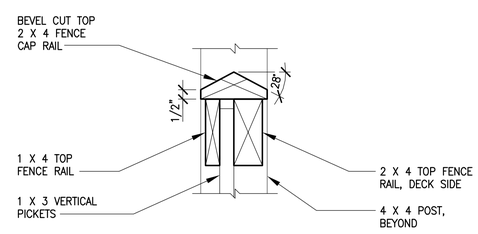

6 A8.2 PLAY DECK FENCE TOP DETAIL
SCALE: 3"=1'-0"

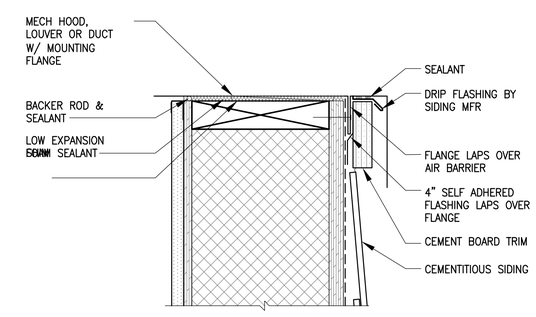

3 A8.2 HOOD/ LOUVER SILL
SCALE: 3"=1'-0"

12 A8.2 WOOD COMPOSITE SIDING END CLOSURE DETAIL
SCALE: 3"=1'-0"

DRAWING NAME: I:\1074400\Dwgs\A\sheets\1074400-A8_2.dwg PLOTTED: Apr 21, 2009 - 11:25am

STATE OF ALASKA 49TH
Gerald V. Neubert
No. A-4047
REGISTERED PROFESSIONAL ARCHITECT

Date Stamped: 04/21/09

Date	Revision	By

USKH
Architecture • Engineering
Land Surveying • Planning

2515 'A' Street
Anchorage, Alaska 99503
(907) 276-4245

544 4th Avenue, Suite 102
Fairbanks, Alaska 99701
(907) 452-2128

3031 Clinton Drive
Suite 200
Juneau, Alaska 99801
(907) 790-2901

351 W Parks Hwy, Suite 200
Wasilla, Alaska 99654
(907) 376-7815

Project:
DOMESTIC VIOLENCE SHELTER

TUNDRA WOMEN'S COALITION
P.O. BOX 2029
250 6th AVENUE
BETHEL, ALASKA 99559

Project Mgr.	JC
Drawn	TDB
Checked	
Date	21 APRIL 2009

Sheet Contents:
EXTERIOR AND INTERIOR DETAILS

Sheet No.:
A8.2

USKH W.O. 1074400

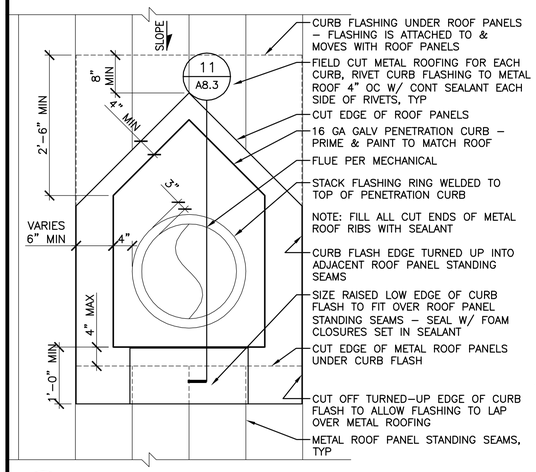

10 A8.3 STACK PENETRATION PLAN

SCALE: 3/4"=1'-0"

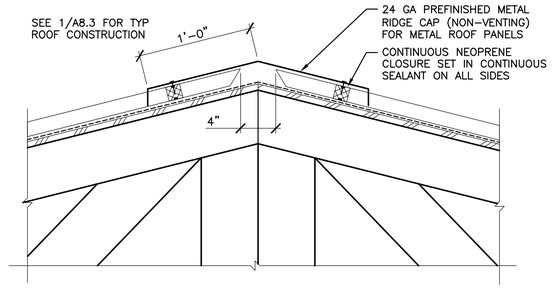

7 A8.3 RIDGE WITHOUT VENT DETAIL

SCALE: 1 1/2"=1'-0"

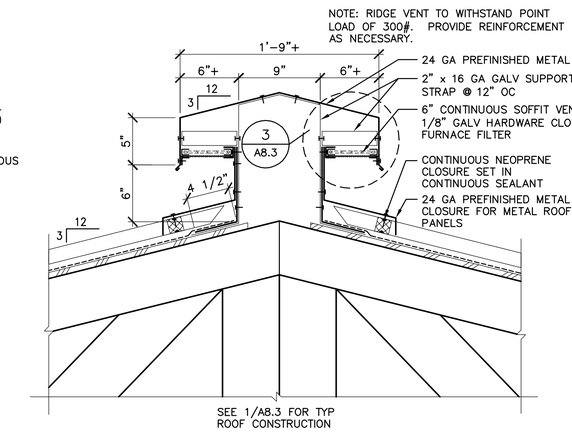

4 A8.3 RIDGE VENT DETAIL

SCALE: 1 1/2"=1'-0"

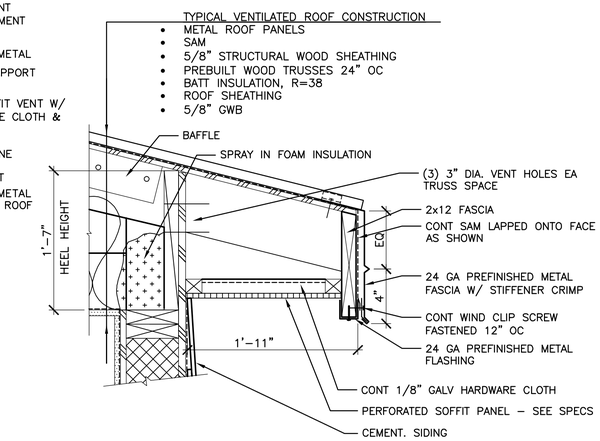

1 A8.3 TYPICAL EAVE DETAIL

SCALE: 1 1/2"=1'-0"

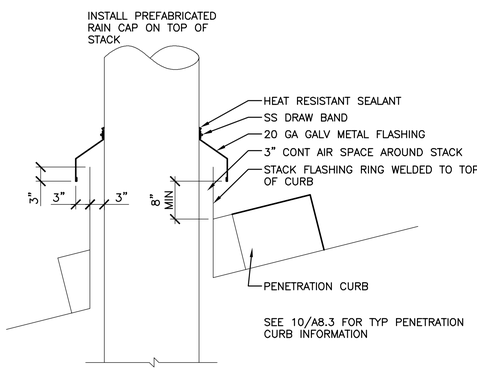

11 A8.3 HOT STACK DETAIL

SCALE: 3/4"=1'-0"

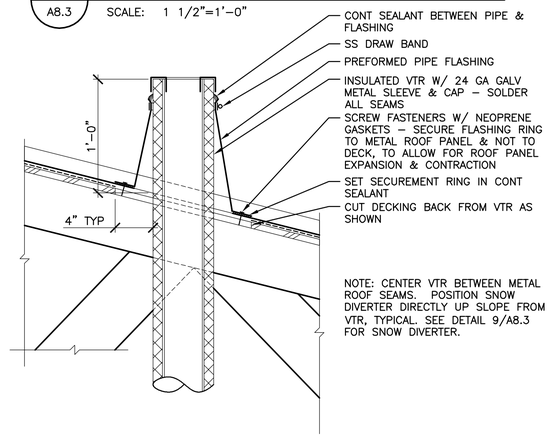

8 A8.3 VTR DETAIL

SCALE: 1 1/2"=1'-0"

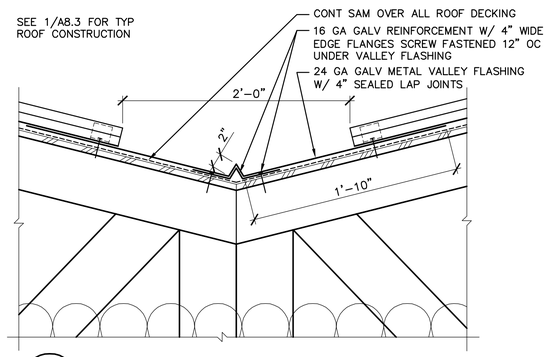

5 A8.3 VALLEY FLASHING DETAIL

SCALE: 1 1/2"=1'-0"

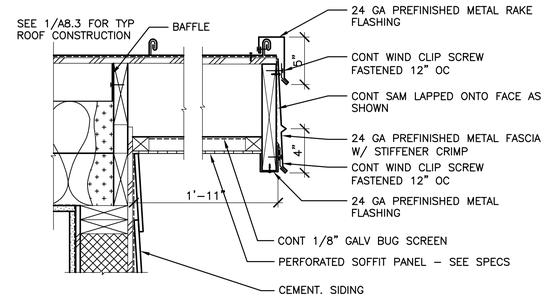

2 A8.3 TYPICAL RAKE DETAIL

SCALE: 1 1/2"=1'-0"

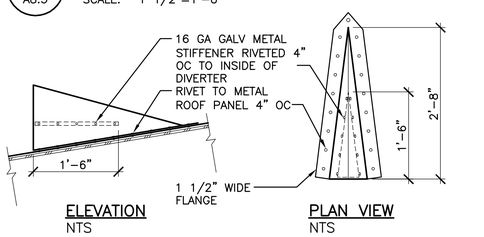

NOTE: POSITION SNOW DIVERTER 12" UP ROOF SLOPE FROM VTR, TYP

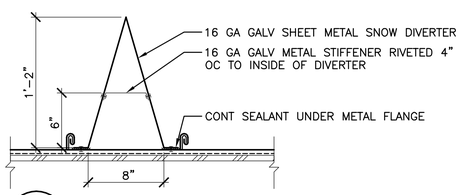

12 A8.3 SIDEWALL DETAIL

SCALE: 1 1/2"=1'-0"

9 A8.3 SNOW DIVERTER

SCALE: 1 1/2"=1'-0"

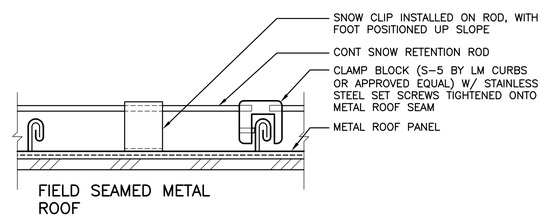

NOTE: SNOW ANCHORING SYSTEM MUST NOT PENETRATE METAL ROOF PANELS. THESE SNOW ANCHOR DETAILS ARE INTENDED TO SHOW CLAMPING TYPE ATTACHMENT HARDWARE. THE SPECIFIC ATTACHMENT HARDWARE WILL DEPEND UPON WHICH METAL ROOF PROFILE IS SELECTED.

6 A8.3 SNOW ANCHOR SYSTEM

SCALE: 3"=1'-0"

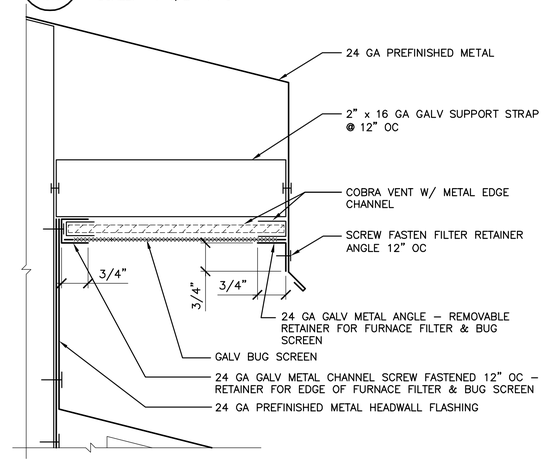

3 A8.3 VENTILATION SCREEN / FILTER DETAIL

SCALE: 6"=1'-0"

STATE OF ALASKA 49TH
Gerald V. Neubert
No. A-4047
REGISTERED PROFESSIONAL ARCHITECT

Date Stamped: 04/21/09

Date	Revision	By

USKH

Architecture • Engineering
Land Surveying • Planning

2515 'A' Street
Anchorage, Alaska 99503
(907) 276-4245

544 4th Avenue, Suite 102
Fairbanks, Alaska 99701
(907) 452-2128

3031 Clinton Drive
Suite 200
Juneau, Alaska 99801
(907) 790-2901

351 W Parks Hwy, Suite 200
Wasilla, Alaska 99654
(907) 376-7815

Project:

DOMESTIC VIOLENCE SHELTER

TUNDRA WOMEN'S COALITION

P.O. BOX 2029
250 6th AVENUE
BETHEL, ALASKA 99559

Project Mgr.	JC
Drawn	TDB
Checked	
Date	21 APRIL 2009

Sheet Contents:

ROOFING DETAILS

Sheet No.:

A8.3

USKH W.O. 1074400

DRAWING NAME: I:\1074400\Dwgs\A\sheets\1074400-A8_3.dwg PLOTTED: Apr 21, 2009 - 11:25am

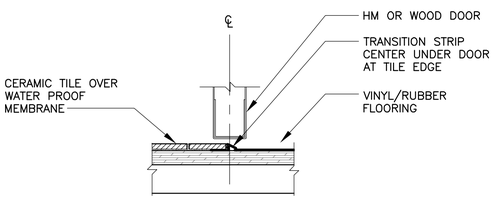

10 A8.4 COUNTER DOOR JAMB DETAIL
SCALE: 3"=1'-0"

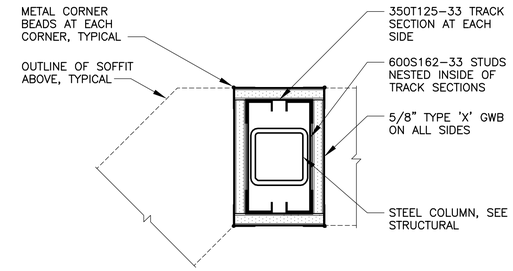

1 A8.4 COLUMN FURRING DETAIL
SCALE: 3"=1'-0"

7 A8.4 COILING DOOR HEAD DETAIL
SCALE: 3"=1'-0"

4 A8.4 OPERABLE PARTITION HEAD DETAIL
SCALE: 3"=1'-0"

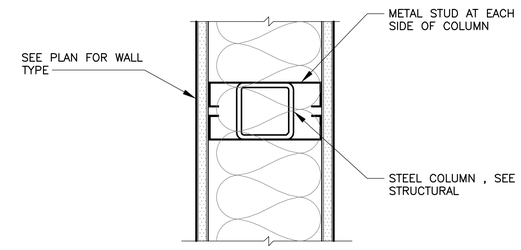

2 A8.4 STEEL COLUMN IN WALL DETAIL
SCALE: 3"=1'-0"

11 A8.4 DOOR THRESHOLD DETAIL
SCALE: 3"=1'-0"

8 A8.4 COLIING DOOR JAMB DETAIL
SCALE: 3"=1'-0"

5 A8.4 OPERABLE PARTITION WALL DETIAL
SCALE: 3"=1'-0"

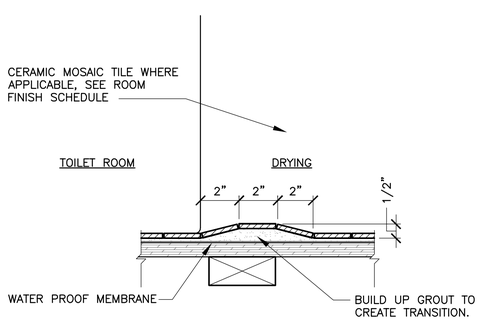

12 A8.4 FLOOR TILE TRANSITION DETAIL
SCALE: 3"=1'-0"

9 A8.4 COILING DOOR SILL DEATIL
SCALE: 3"=1'-0"

6 A8.4 OPERABLE PARTITION SILL DETAIL
SCALE: 3"=1'-0"

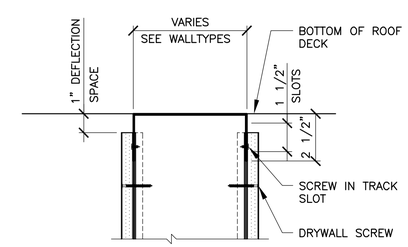

3 A8.4 DEFLECTION TRACK AT CEILING
SCALE: 3"=1'-0"

STATE OF ALASKA 49TH
Gerald V. Neubert
No. A-4047
REGISTERED PROFESSIONAL ARCHITECT

Date Stamped: 04/21/09

Date	Revision	By

USKH
Architecture • Engineering
Land Surveying • Planning

2515 'A' Street
Anchorage, Alaska 99503
(907) 276-4245

544 4th Avenue, Suite 102
Fairbanks, Alaska 99701
(907) 452-2128

3031 Clinton Drive
Suite 200
Juneau, Alaska 99801
(907) 790-2901

351 W Parks Hwy, Suite 200
Wasilla, Alaska 99654
(907) 376-7815

Project:
DOMESTIC VIOLENCE SHELTER

TUNDRA WOMEN'S COALITION
P.O. BOX 2029
250 6th AVENUE
BETHEL, ALASKA 99559

Project Mgr.	JC
Drawn	TDB
Checked	
Date	21 APRIL 2009

Sheet Contents:
INTERIOR DETAILS

Sheet No.:
A8.4

USKH W.O. 1074400

DRAWING NAME: I:\1074400\Dwgs\A\sheets\1074400-A8_4.dwg PLOTTED: Apr 21, 2009 - 11:24am

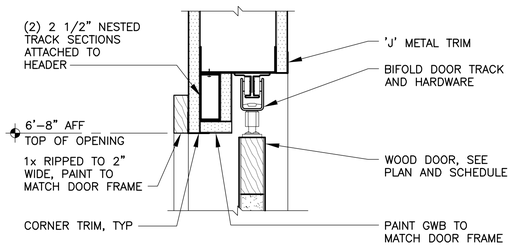

10 A8.5 BIFOLD DOOR HEAD DETAIL
SCALE: 3"=1'-0"

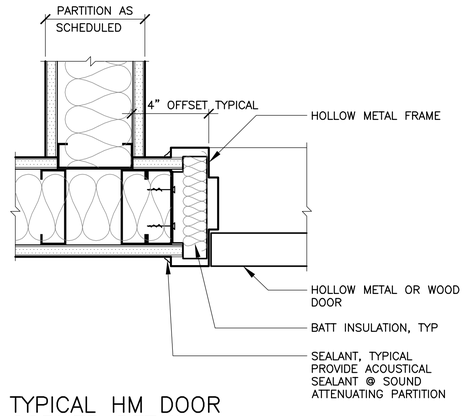

7 A8.5 TYPICAL HM DOOR CORNER DETAIL
SCALE: 3"=1'-0"

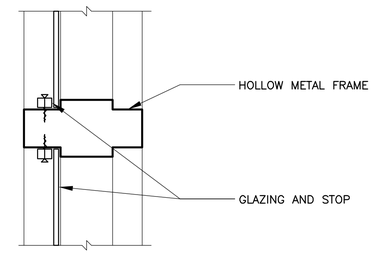

4 A8.5 TYPICAL HM WINDOW FRAME MULLION DETAIL
SCALE: 3"=1'-0"

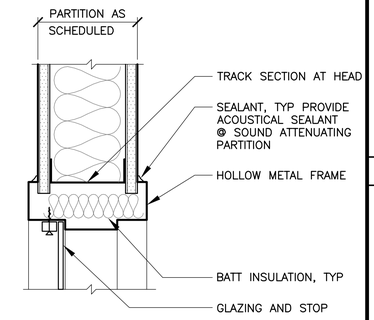

1 A8.5 TYPICAL HM WINDOW FRAME HEAD DETAIL
SCALE: 3"=1'-0"

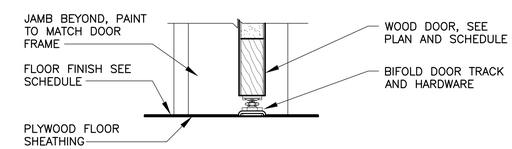

11 A8.5 BIFOLD DOOR SILL DETAIL
SCALE: 3"=1'-0"

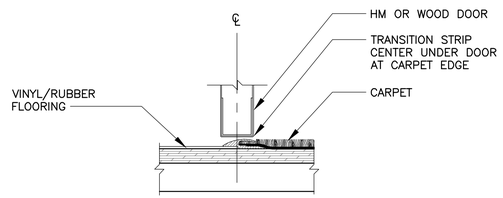

8 A8.5 DOOR THRESHOLD DETAIL
SCALE: 3"=1'-0"

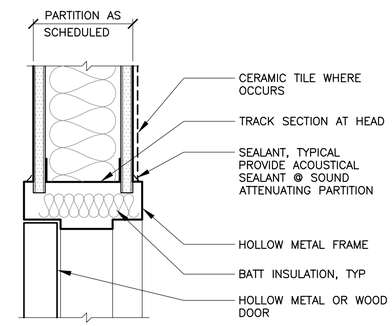

5 A8.5 TYPICAL HM DOOR FRAME HEAD DETAIL
SCALE: 3"=1'-0"

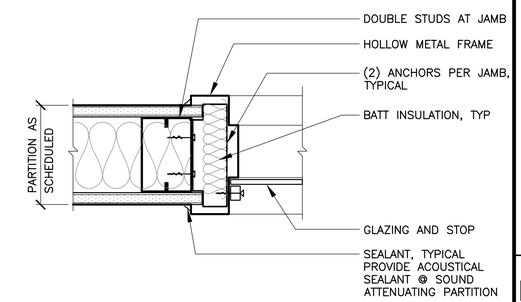

2 A8.5 TYPICAL HM WINDOW FRAME JAMB DETAIL
SCALE: 3"=1'-0"

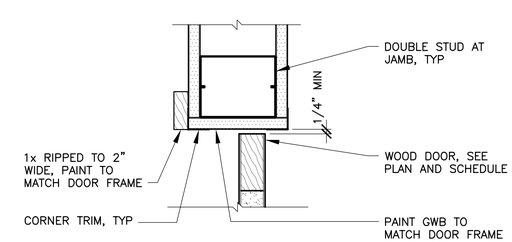

12 A8.5 BIFOLD DOOR JAMB DETAIL
SCALE: 3"=1'-0"

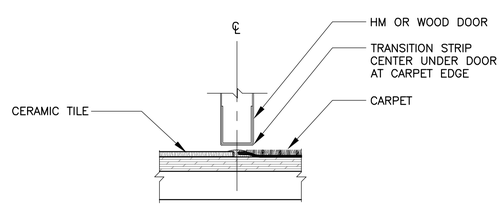

9 A8.5 DOOR THRESHOLD DETAIL
SCALE: 3"=1'-0"

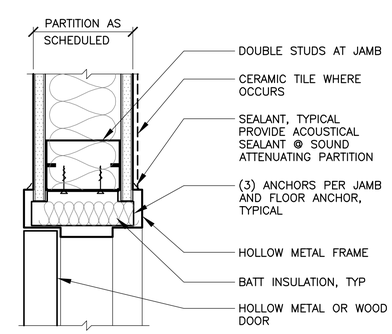

6 A8.5 TYPICAL HM DOOR FRAME JAMB DETAIL
SCALE: 3"=1'-0"

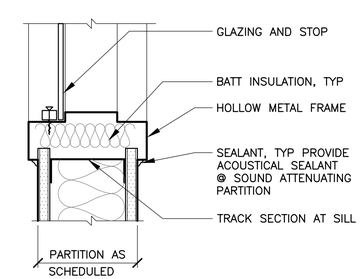

3 A8.5 TYPICAL HM WINDOW FRAME SILL DETAIL
SCALE: 3"=1'-0"

STATE OF ALASKA 49TH Gerald V. Neubert No. A-4047 REGISTERED PROFESSIONAL ARCHITECT

Date Stamped: 04/21/09

Date	Revision	By

USKH
Architecture • Engineering
Land Surveying • Planning

2515 'A' Street
Anchorage, Alaska 99503
(907) 276-4245

544 4th Avenue, Suite 102
Fairbanks, Alaska 99701
(907) 452-2128

3031 Clinton Drive
Suite 200
Juneau, Alaska 99801
(907) 790-2901

351 W Parks Hwy, Suite 200
Wasilla, Alaska 99654
(907) 376-7815

Project:
DOMESTIC VIOLENCE SHELTER

TUNDRA WOMEN'S COALITION
P.O. BOX 2029
250 6th AVENUE
BETHEL, ALASKA 99559

Project Mgr.	JC	
Drawn	TDB	
Checked		
Date	21 APRIL 2009	

Sheet Contents:
INTERIOR DETAILS

Sheet No.:
A8.5

USKH W.O. 1074400

DRAWING NAME: I:\1074400\Dwgs\A\sheets\1074400-A8_5.dwg PLOTTED: Apr 21, 2009 - 11:23am

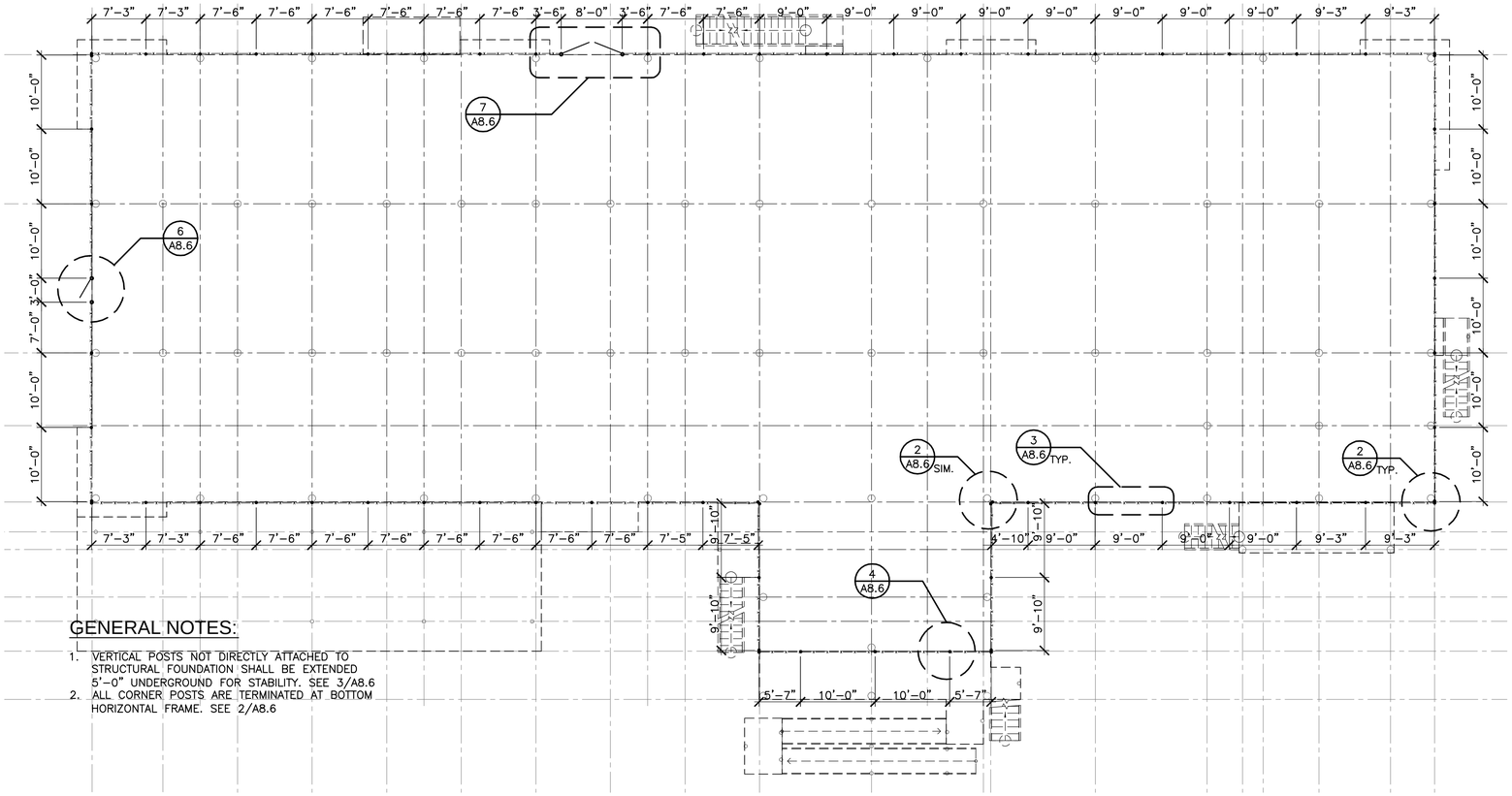

GENERAL NOTES:

1. VERTICAL POSTS NOT DIRECTLY ATTACHED TO STRUCTURAL FOUNDATION SHALL BE EXTENDED 5'-0" UNDERGROUND FOR STABILITY. SEE 3/A8.6
2. ALL CORNER POSTS ARE TERMINATED AT BOTTOM HORIZONTAL FRAME. SEE 2/A8.6

1 A8.6 UNDER-BUILDING FENCE PLAN
SCALE: N.T.S.

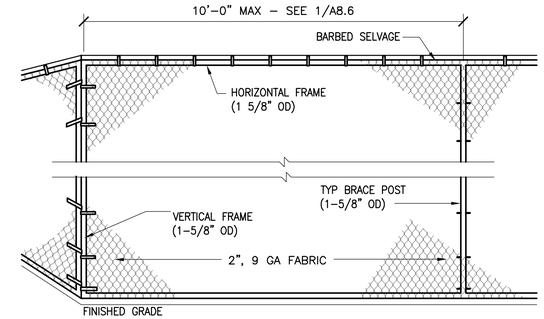

2 A8.6 TYP CORNER TERMINAL
SCALE: 1/2"=1'-0"

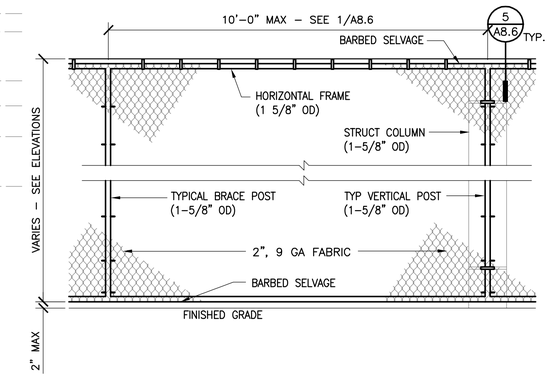

3 A8.6 TYPICAL LINE SECTION
SCALE: 1/2"=1'-0"

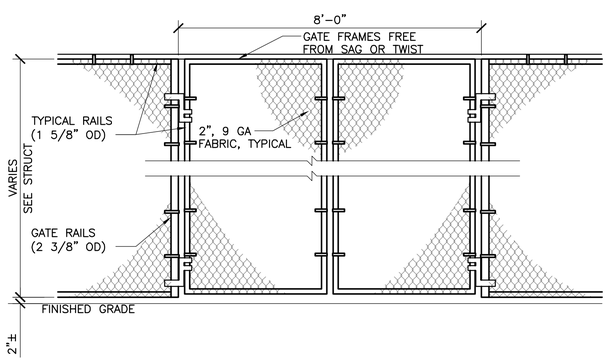

7 A8.6 EQUIPMENT GATE
SCALE: 1/2"=1'-0"

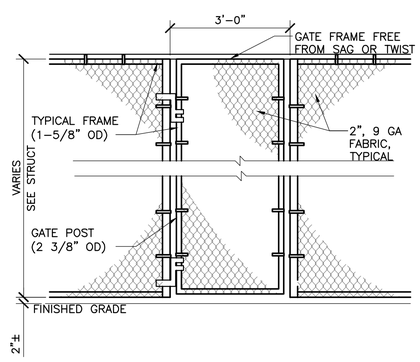

6 A8.6 PEDESTRIAN GATE
SCALE: 1/2"=1'-0"

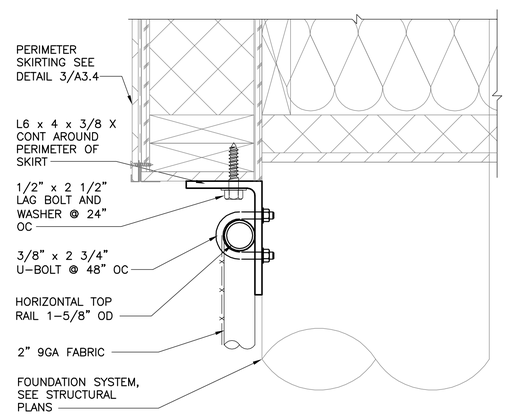

5 A8.6 FENCE CONNECTION
SCALE: 3"=1'-0"

4 A8.6 NOT USED
SCALE:

STATE OF ALASKA 49TH
Gerald V. Neubert
No. A-4047
REGISTERED PROFESSIONAL ARCHITECT

Date Stamped: 04/21/09

Date	Revision	By

USKH

Architecture • Engineering
Land Surveying • Planning

2515 'A' Street
Anchorage, Alaska 99503
(907) 276-4245

544 4th Avenue, Suite 102
Fairbanks, Alaska 99701
(907) 452-2128

3031 Clinton Drive
Suite 200
Juneau, Alaska 99801
(907) 790-2901

351 W Parks Hwy, Suite 200
Wasilla, Alaska 99654
(907) 376-7815

Project:
DOMESTIC VIOLENCE SHELTER

TUNDRA WOMEN'S COALITION
P.O. BOX 2029
250 6th AVENUE
BETHEL, ALASKA 99559

Project Mgr.	JC
Drawn	TDB
Checked	
Date	21 APRIL 2009

Sheet Contents:
UNDERFLOOR SECURITY FENCE PLAN & DETAILS

Sheet No.:
A8.6

USKH W.O. 1074400

DRAWING NAME: I:\1074400\Dwgs\A\sheets\1074400-A8_6.dwg PLOTTED: Apr 21, 2009 - 11:23am

10 / A8.7 SOFFIT TRANSITION DETAIL
SCALE: 1 1/2"=1'-0"

7 / A8.7 BUILDING SKIRT AT PLAY DECK DETAIL
SCALE: 3"=1'-0"

4 / A8.7 EXTERIOR DOOR HEAD AT CEMENTITIOUS SIDING DETAIL
SCALE: 3"=1'-0"

1 / A8.7 EXTERIOR DOOR HEAD AT WOOD COMPOSITE SIDING DETAIL
SCALE: 3"=1'-0"

8 / A8.7 BUILDING SKIRT AT SMOKING BALCONY DETAIL
SCALE: 3"=1'-0"

5 / A8.7 EXTERIOR DOOR JAMB AT CEMENTITIOUS SIDING DETAIL
SCALE: 3"=1'-0"

2 / A8.7 EXTERIOR DOOR JAMB AT WOOD COMPOSITE SIDING DETAIL
SCALE: 3"=1'-0"

9 / A8.7 PILE CLOSURE AT UNDER FLOOR FRAMING DETAIL
SCALE: 3"=1'-0"

6 / A8.7 EXTERIOR DOOR SILL AT WOOD COMPOSITE DECKING DETAIL
SCALE: 3"=1'-0"

3 / A8.7 EXTERIOR DOOR SILL AT FIBERGLASS DECKING DETAIL
SCALE: 3"=1'-0"

DRAWING NAME: I:\1074400\Dwgs\A\sheets\1074400-A8_7.dwg PLOTTED: Apr 21, 2009 - 11:22am

STATE OF ALASKA 49TH
Gerald V. Neubert
No. A-4047
REGISTERED PROFESSIONAL ARCHITECT

Date Stamped: 04/21/09

Date	Revision	By

USKH
Architecture • Engineering
Land Surveying • Planning

2515 'A' Street
Anchorage, Alaska 99503
(907) 276-4245

544 4th Avenue, Suite 102
Fairbanks, Alaska 99701
(907) 452-2128

3031 Clinton Drive
Suite 200
Juneau, Alaska 99801
(907) 790-2901

351 W Parks Hwy, Suite 200
Wasilla, Alaska 99654
(907) 376-7815

Project:
DOMESTIC VIOLENCE SHELTER

TUNDRA WOMEN'S COALITION
P.O. BOX 2029
250 6th AVENUE
BETHEL, ALASKA 99559

Project Mgr.	JC
Drawn	TDB
Checked	
Date	21 APRIL 2009

Sheet Contents:
EXTERIOR DETAILS

Sheet No.:
A8.7

USKH W.O. 1074400

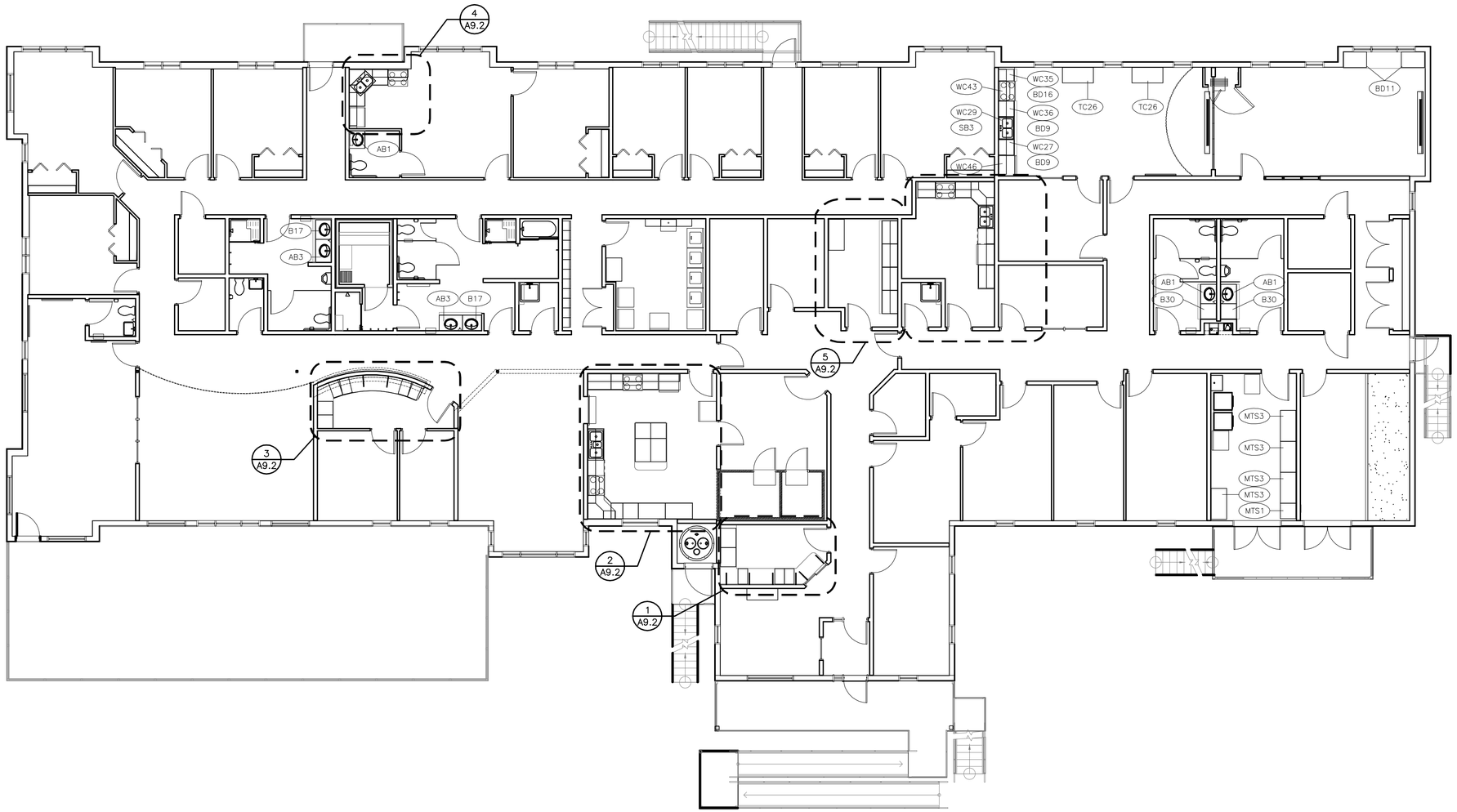

1 A9.1 EQUIPMENT & FURNISHINGS PLAN

SCALE: 1/4"=1'-0"

STATE OF ALASKA 49TH
Gerald V. Neubert
No. A-4047
REGISTERED PROFESSIONAL ARCHITECT

Date Stamped: 04/21/09

Date	Revision	By

USKH

Architecture • Engineering

Land Surveying • Planning

2515 'A' Street
Anchorage, Alaska 99503
(907) 276-4245

544 4th Avenue, Suite 102
Fairbanks, Alaska 99701
(907) 452-2128

3031 Clinton Drive
Suite 200
Juneau, Alaska 99801
(907) 790-2901

351 W Parks Hwy, Suite 200
Wasilla, Alaska 99654
(907) 376-7815

Project:

DOMESTIC VIOLENCE SHELTER

TUNDRA WOMEN'S COALITION

P.O. BOX 2029
250 6th AVENUE
BETHEL, ALASKA 99559

Project Mgr.	JC
Drawn	MAB
Checked	
Date	21 APRIL 2009

Sheet Contents:

EQUIPMENT, FURNISHINGS & SPECIALTIES PLAN

Sheet No.:

A9.1

USKH W.O. 1074400

DRAWING NAME: i:\1074400\Dwgs\A\sheets\1074400-A9_1.dwg PLOTTED: Apr 21, 2009 - 11:22am

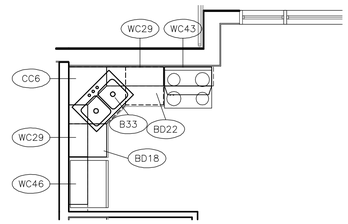

4 A9.2 ENLARGED FAMILY SUITE KITCHEN 159 EQUIPMENT & FURNISHINGS PLAN

SCALE: 1/4"=1'-0"

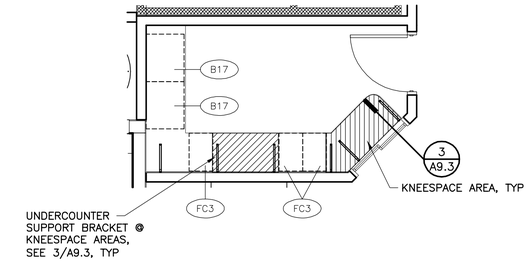

1 A9.2 ENLARGED RECEPTION OFFICE 104 EQUIPMENT & FURNISHINGS PLAN

SCALE: 1/4"=1'-0"

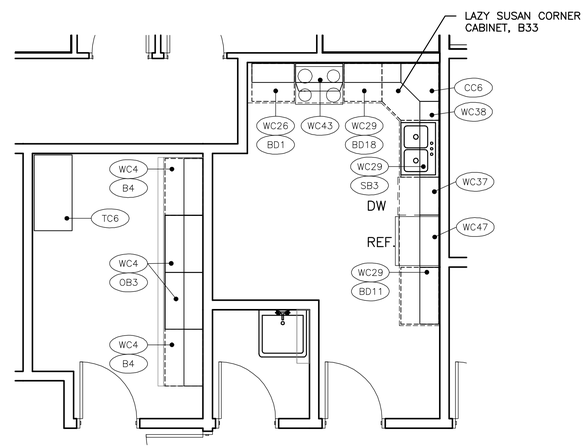

5 A9.2 ENLARGED BREAK RM & WORK RM EQUIPMENT & FURNISHINGS PLAN

SCALE: 1/4"=1'-0"

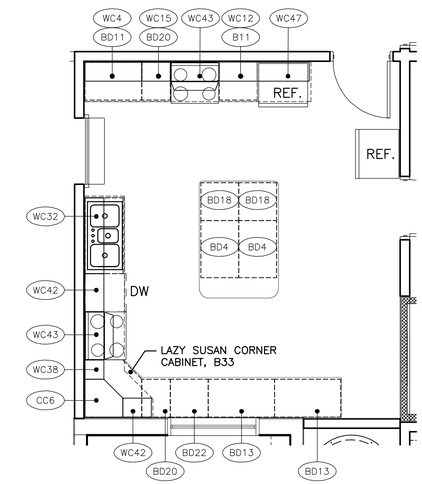

2 A9.2 ENLARGED KITCHEN 133 EQUIPMENT & FURNISHINGS PLAN

SCALE: 1/4"=1'-0"

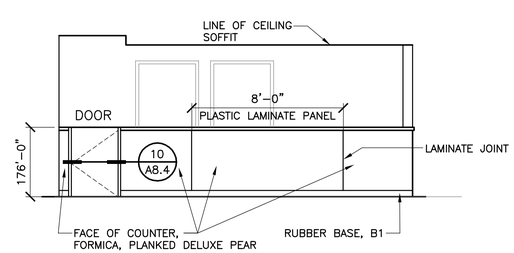

6 A9.2 ENLARGED ELEVATION @ ADVOCATE COUNTER

SCALE: 1/4"=1'-0"

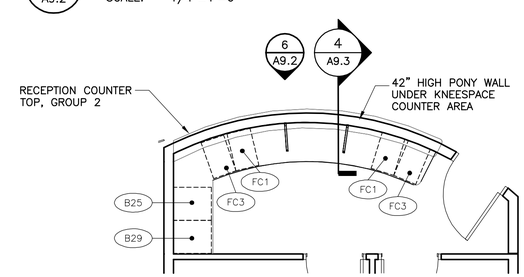

3 A9.2 ENLARGED ADVOCATE AREA 140 FURNISHINGS PLAN

SCALE: 1/4"=1'-0"

STATE OF ALASKA 49TH Gerald V. Neubert No. A-4047 REGISTERED PROFESSIONAL ARCHITECT

Date Stamped: 04/21/09

Date	Revision	By

USKH

Architecture • Engineering

Land Surveying • Planning

2515 'A' Street
Anchorage, Alaska 99503
(907) 276-4245

544 4th Avenue, Suite 102
Fairbanks, Alaska 99701
(907) 452-2128

3031 Clinton Drive
Suite 200
Juneau, Alaska 99801
(907) 790-2901

351 W Parks Hwy, Suite 200
Wasilla, Alaska 99654
(907) 376-7815

Project:

DOMESTIC VIOLENCE SHELTER

TUNDRA WOMEN'S COALITION

P.O. BOX 2029
250 6th AVENUE
BETHEL, ALASKA 99559

Project Mgr.	JC	
Drawn	MAB	JC
Checked		
Date	21 APRIL 2009	

Sheet Contents:

ENLARGED FLOOR PLANS – EQUIPMENT, FURNISHINGS, & SPECIALTIES

Sheet No.:

A9.2

USKH W.O. 1074400

DRAWING NAME: I:\1074400\Dwgs\A\sheets\1074400-A9_2.dwg PLOTTED: Apr 21, 2009 - 11:24am

NOTE:
PROVIDE COUNTERTOP/BACKSPLASH WITH ALL BASE CABINET TYPES SHOWN ON PLANS OR IN SCHEDULE.

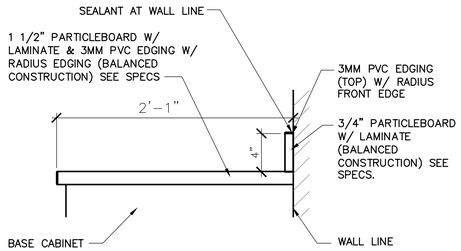

2 / A9.3 TYP COUNTERTOP DETAIL

SCALE: 1 1/2"=1'-0"

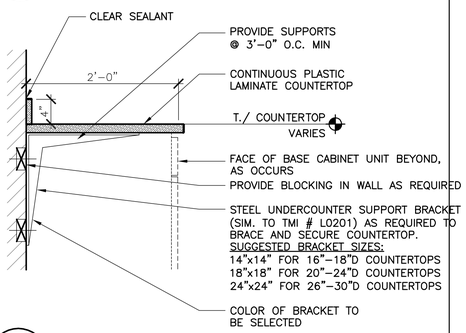

3 / A9.3 TYP COUNTER KNEESPACE

SCALE: 1"=1'-0"

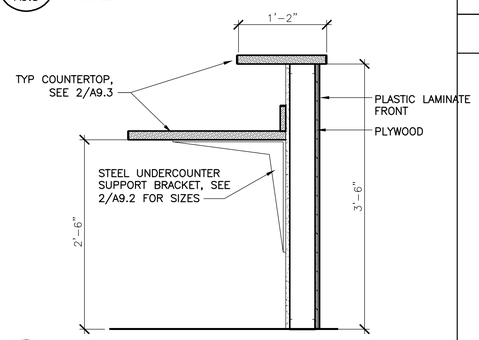

4 / A9.3 ADVOCATE COUNTER SECTION

SCALE: 1 1/2"=1'-0"

5 / A9.3 TYPCIAL CLOSET SHELVING DET

SCALE: 3/4"=1'-0"

TALL CABINETS

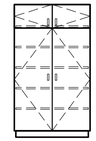

DESCRIPTION
TALL STORAGE UNIT WITH FOUR ADJUSTABLE SHELVES IN LOWER SECTION, TWO LARGE HINGED DOORS, AND TWO SMALL HINGED DOORS.

ITEM	SIZE
TC21	33"Wx84"Hx24"D
TC22	36"Wx84"Hx24"D
TC23	39"Wx84"Hx24"D
TC22	42"Wx84"Hx24"D
TC25	45"Wx84"Hx24"D
TC26	48"Wx84"Hx24"D

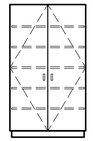

DESCRIPTION
TALL STORAGE UNIT WITH FIVE ADJUSTABLE SHELVES AND TWO HINGED DOORS.

ITEM	SIZE
TC1	33"Wx84"Hx24"D
TC2	36"Wx84"Hx24"D
TC3	39"Wx84"Hx24"D
TC4	42"Wx84"Hx24"D
TC5	45"Wx84"Hx24"D
TC6	48"Wx84"Hx24"D

DESCRIPTION
TALL OPEN SHELVING UNIT WITH FIVE ADJUSTABLE SHELVES AND NO DOORS.

ITEM	SIZE
TC31	33"Wx84"Hx23"D
TC32	36"Wx84"Hx23"D
TC33	39"Wx84"Hx23"D
TC34	42"Wx84"Hx23"D
TC35	45"Wx84"Hx23"D
TC36	48"Wx84"Hx23"D

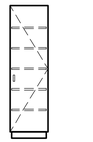

DESCRIPTION
TALL STORAGE UNIT WITH FIVE ADJUSTABLE SHELVES AND DOOR HINGED RIGHT.

ITEM	SIZE
TC7	18"Wx84"Hx24"D
TC8	21"Wx84"Hx24"D
TC9	24"Wx84"Hx24"D

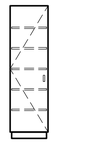

DESCRIPTION
TALL STORAGE UNIT WITH FIVE ADJUSTABLE SHELVES AND DOOR HINGED LEFT.

ITEM	SIZE
TC10	18"Wx84"Hx24"D
TC11	21"Wx84"Hx24"D
TC12	24"Wx84"Hx24"D

WALL CABINETS

DESCRIPTION
WALL UNIT WITH ONE ADJUSTABLE SHELF AND TWO HINGED DOORS.

ITEM	SIZE
WC26	27"Wx24"Hx14"D
WC27	30"Wx24"Hx14"D
WC28	33"Wx24"Hx14"D
WC29	36"Wx24"Hx14"D
WC30	39"Wx24"Hx14"D
WC31	42"Wx24"Hx14"D W/ VERTICAL DIVIDER
WC32	48"Wx24"Hx14"D W/ VERTICAL DIVIDER

DESCRIPTION
WALL UNIT WITH TWO ADJUSTABLE SHELVES AND TWO HINGED DOORS.

ITEM	SIZE
WC1	27"Wx30"Hx14"D
WC2	30"Wx30"Hx14"D
WC3	33"Wx30"Hx14"D
WC4	36"Wx30"Hx14"D
WC5	39"Wx30"Hx14"D
WC6	42"Wx30"Hx14"D W/ VERTICAL DIVIDER
WC7	48"Wx30"Hx14"D W/ VERTICAL DIVIDER

DESCRIPTION
WALL UNIT WITH TWO ADJUSTABLE SHELVES AND ONE DOOR HINGED RIGHT.

ITEM	SIZE
WC33	12"Wx24"Hx14"D
WC34	15"Wx24"Hx14"D
WC35	18"Wx24"Hx14"D
WC36	21"Wx24"Hx14"D
WC37	24"Wx24"Hx14"D

DESCRIPTION
WALL UNIT WITH TWO ADJUSTABLE SHELVES AND ONE DOOR HINGED RIGHT.

ITEM	SIZE
WC8	12"Wx30"Hx14"D
WC9	15"Wx30"Hx14"D
WC10	18"Wx30"Hx14"D
WC11	21"Wx30"Hx14"D
WC12	24"Wx30"Hx14"D

DESCRIPTION
WALL UNIT WITH TWO ADJUSTABLE SHELVES AND ONE DOOR HINGED LEFT.

ITEM	SIZE
WC38	12"Wx24"Hx14"D
WC39	15"Wx24"Hx14"D
WC40	18"Wx24"Hx14"D
WC41	21"Wx24"Hx14"D
WC42	24"Wx24"Hx14"D

DESCRIPTION
WALL UNIT WITH TWO ADJUSTABLE SHELVES AND ONE DOOR HINGED LEFT.

ITEM	SIZE
WC13	12"Wx30"Hx14"D
WC14	15"Wx30"Hx14"D
WC15	18"Wx30"Hx14"D
WC16	21"Wx30"Hx14"D
WC17	24"Wx30"Hx14"D

DESCRIPTION
WALL UNIT WITH TWO HINGED DOORS. RANGE HOOD SHALL BE 30"W OR 36"W.

ITEM	SIZE
WC43	30"Wx18"Hx14"D
WC44	36"Wx18"Hx14"D

DESCRIPTION
OPEN WALL UNIT WITH ONE ADJUSTABLE SHELF.

ITEM	SIZE
WC18	24"Wx30"Hx13"D
WC19	27"Wx30"Hx13"D
WC20	30"Wx30"Hx13"D
WC21	33"Wx30"Hx13"D
WC22	36"Wx30"Hx13"D
WC23	39"Wx30"Hx13"D
WC24	42"Wx30"Hx13"D W/ VERTICAL DIVIDER
WC25	48"Wx30"Hx13"D W/ VERTICAL DIVIDER

DESCRIPTION
WALL UNIT WITH TWO HINGED DOORS.

ITEM	SIZE
WC45	27"Wx15"Hx14"D
WC46	30"Wx15"Hx24"D
WC47	33"Wx15"Hx24"D
WC48	36"Wx15"Hx14"D
WC49	39"Wx15"Hx14"D
WC50	42"Wx15"Hx14"D W/ VERTICAL DIVIDER
WC51	48"Wx15"Hx14"D W/ VERTICAL DIVIDER
WC52	27"Wx12"Hx14"D
WC53	30"Wx12"Hx14"D
WC54	33"Wx12"Hx14"D
WC55	36"Wx12"Hx14"D
WC56	39"Wx12"Hx14"D
WC57	42"Wx12"Hx14"D W/ VERTICAL DIVIDER
WC58	48"Wx12"Hx14"D W/ VERTICAL DIVIDER

SINK BASE CABINETS

DESCRIPTION
SINK BASE UNIT WITH TWO HINGED DOORS, AND TWO BLANK DRAWER PANELS.

SERVICES: HOT AND COLD WATER

ITEM	SIZE
SB1	30"Wx34½"Hx24"D
SB2	33"Wx34½"Hx24"D
SB3	36"Wx34½"Hx24"D
SB4	42"Wx34½"Hx24"D
SB5	48"Wx34½"Hx24"D

ADA SINK BASE CABINETS

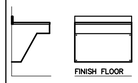

DESCRIPTION
WHEELCHAIR ACCESSIBLE VANITY CABINET (ADA). REMOVABLE FACE PANEL TAMPER PROOF SCREWS.

SERVICES: HOT AND COLD WATER.

REFER TO TO 9/A9.0 FOR ADDITIONAL INFO.

ITEM	SIZE
AB1	30"Wx34½"Hx24"D
AB2	33"Wx34½"Hx24"D
AB3	36"Wx34½"Hx24"D
AB4	42"Wx34½"Hx24"D
AB5	48"Wx34½"Hx24"D

FILE CABINETS

DESCRIPTION
FILE DRAWER UNIT WITH FOLLOWERS, ONE FILE DRAWER (9 3/4"D INSIDE), AND TWO TOP DRAWERS (3 3/4"D INSIDE).

ITEM	SIZE
FC1	16"Wx30"Hx24"D (LETTER SIZE)
FC2	19"Wx30"Hx24"D (LEGAL SIZE)

DESCRIPTION
FILE DRAWER UNIT WITH FOLLOWERS AND TWO EQUAL DRAWERS (9 3/4"D INSIDE).

ITEM	SIZE
FC3	16"Wx30"Hx24"D (LETTER SIZE)
FC4	19"Wx30"Hx24"D (LEGAL SIZE)

OPEN BASE CABINETS

DESCRIPTION
OPEN BASE UNIT WITH ONE ADJUSTABLE SHELF.

ITEM	SIZE
OB1	30"Wx34½"Hx24"D
OB2	33"Wx34½"Hx24"D
OB3	36"Wx34½"Hx24"D
OB4	42"Wx34½"Hx24"D W/ VERTICAL DIVIDER
OB5	48"Wx34½"Hx24"D W/ VERTICAL DIVIDER

DESCRIPTION
OPEN BASE UNIT WITH ONE ADJUSTABLE SHELF.

ITEM	SIZE
OB6	30"Wx30"Hx24"D
OB7	33"Wx30"Hx24"D
OB8	36"Wx30"Hx24"D
OB9	42"Wx30"Hx24"D W/ VERTICAL DIVIDER
OB10	48"Wx30"Hx24"D W/ VERTICAL DIVIDER

DESCRIPTION
OPEN BASE UNIT WITH TWO DRAWERS AND ONE ADJUSTABLE SHELF.

ITEM	SIZE
OB11	30"Wx34½"Hx24"D
OB12	33"Wx34½"Hx24"D
OB13	36"Wx34½"Hx24"D
OB14	42"Wx34½"Hx24"D W/ VERTICAL DIVIDER
OB15	48"Wx34½"Hx24"D W/ VERTICAL DIVIDER

DESCRIPTION
SHORT OPEN SHELVING UNIT WITH ONE ADJUSTABLE SHELF AND NO DOORS.

ITEM	SIZE
OB16	30"Wx30"Hx14"D
OB17	33"Wx30"Hx14"D
OB18	36"Wx30"Hx14"D
OB19	42"Wx30"Hx14"D W/ VERTICAL DIVIDER
OB20	48"Wx30"Hx14"D W/ VERTICAL DIVIDER

METAL STORAGE CABINETS

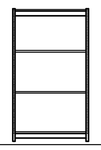

DESCRIPTION
BOLTLESS RIVET STEEL STORAGE RACK, W/ DOUBLE RIVET MEDIUM DUTY CHANNEL BEAMS, 4 LEVEL. SIMILAR TO LYON WORKSPACE PRODUCTS. PROVIDE 5/8" THICK PARTICLEBOARD SHELVES & TIE PLATES.

ITEM	SIZE
MTS1	24"Wx84"Hx24"D
MTS2	36"Wx84"Hx24"D
MTS3	48"Wx84"Hx24"D

BASE CABINETS

DESCRIPTION
BASE UNIT WITH ONE DRAWER, ONE ADJUSTABLE SHELF, & TWO HINGED DOORS.

ITEM	SIZE
BD1	27"Wx34½"Hx24"D
BD2	30"Wx34½"Hx24"D
BD3	33"Wx34½"Hx24"D
BD4	36"Wx34½"Hx24"D
BD5	39"Wx34½"Hx24"D
BD6	42"Wx34½"Hx24"D W/ VERTICAL DIVIDER
BD7	48"Wx34½"Hx24"D W/ VERTICAL DIVIDER

DESCRIPTION
BASE UNIT WITH TWO EQUAL DRAWERS, ONE ADJUSTABLE SHELF, & TWO HINGED DOORS.

ITEM	SIZE
BD8	27"Wx34½"Hx24"D
BD9	30"Wx34½"Hx24"D
BD10	33"Wx34½"Hx24"D
BD11	36"Wx34½"Hx24"D
BD12	39"Wx34½"Hx24"D
BD13	42"Wx34½"Hx24"D W/ VERTICAL DIVIDER
BD14	48"Wx34½"Hx24"D W/ VERTICAL DIVIDER

DESCRIPTION
BASE UNIT WITH ONE DRAWER, ONE ADJUSTABLE SHELF AND ONE DOOR HINGED RIGHT.

ITEM	SIZE
BD15	15"Wx34½"Hx24"D
BD16	18"Wx34½"Hx24"D
BD17	21"Wx34½"Hx24"D
BD18	24"Wx34½"Hx24"D

DESCRIPTION
BASE UNIT WITH ONE DRAWER, ONE ADJUSTABLE SHELF AND ONE DOOR HINGED LEFT.

ITEM	SIZE
BD19	15"Wx34½"Hx24"D
BD20	18"Wx34½"Hx24"D
BD21	21"Wx34½"Hx24"D
BD22	24"Wx34½"Hx24"D

DESCRIPTION
BLIND CORNER BASE UNIT (LEFT SIDE EXPOSED) WITH ONE DRAWER, ONE ADJUSTABLE SHELF, AND ONE DOOR HINGED RIGHT.

ITEM	SIZE
BD23	45"Wx34½"Hx24"D

DESCRIPTION
BLIND CORNER BASE UNIT (RIGHT SIDE EXPOSED) WITH ONE DRAWER, ONE ADJUSTABLE SHELF, AND ONE DOOR HINGED LEFT.

ITEM	SIZE
BD24	45"Wx34½"Hx24"D

DESCRIPTION
BASE UNIT WITH ONE ADJUSTABLE SHELF AND TWO HINGED DOORS.

ITEM	SIZE
B1	27"Wx34½"Hx24"D
B2	30"Wx34½"Hx24"D
B3	33"Wx34½"Hx24"D
B4	36"Wx34½"Hx24"D
B5	39"Wx34½"Hx24"D
B6	42"Wx34½"Hx24"D W/ VERTICAL DIVIDER
B7	48"Wx34½"Hx24"D W/ VERTICAL DIVIDER

DESCRIPTION
BASE UNIT WITH ONE ADJUSTABLE SHELF AND ONE DOOR HINGED RIGHT.

ITEM	SIZE
B8	15"Wx34½"Hx24"D
B9	18"Wx34½"Hx24"D
B10	21"Wx34½"Hx24"D
B11	24"Wx34½"Hx24"D

DESCRIPTION
BASE UNIT WITH ONE ADJUSTABLE SHELF AND ONE DOOR HINGED LEFT.

ITEM	SIZE
B12	15"Wx34½"Hx24"D
B13	18"Wx34½"Hx24"D
B14	21"Wx34½"Hx24"D
B15	24"Wx34½"Hx24"D

DESCRIPTION
BASE UNIT WITH ONE ADJUSTABLE SHELF AND TWO HINGED DOORS.

ITEM	SIZE
B16	27"Wx30"Hx24"D
B17	30"Wx30"Hx24"D
B18	33"Wx30"Hx24"D
B19	36"Wx30"Hx24"D
B20	39"Wx30"Hx24"D
B21	42"Wx30"Hx24"D W/ VERTICAL DIVIDER
B22	48"Wx30"Hx24"D W/ VERTICAL DIVIDER

DESCRIPTION
BASE UNIT WITH ONE ADJUSTABLE SHELF AND ONE DOOR HINGED RIGHT.

ITEM	SIZE
B23	15"Wx30"Hx24"D
B24	18"Wx30"Hx24"D
B25	21"Wx30"Hx24"D
B26	24"Wx30"Hx24"D

DESCRIPTION
BASE UNIT WITH ONE ADJUSTABLE SHELF AND ONE DOOR HINGED LEFT.

ITEM	SIZE
B27	15"Wx30"Hx24"D
B28	18"Wx30"Hx24"D
B29	21"Wx30"Hx24"D
B30	24"Wx30"Hx24"D

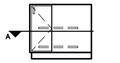

DESCRIPTION
BASE REVOLVING CORNER UNIT (LAZY SUSAN) WITH TWO 27" DIAMETER METAL SHELVES.

ITEM	SIZE
B31	36"Wx34½"Hx36"D

DESCRIPTION
BASE REVOLVING CORNER UNIT (LAZY SUSAN) WITH TWO 27" DIAMETER METAL SHELVES.

ITEM	SIZE
B32	36"Wx34½"Hx36"D

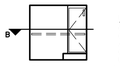

DESCRIPTION
CORNER BASE UNIT WITH ONE ADJUSTABLE SHELF, AND ONE HINGED DOOR. OMIT SHELF AT SINK BASE UNITS.

ITEM	SIZE
B33	36"Wx34½"Hx36"D-LAZY SUSAN

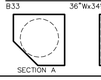

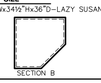

CORNER WALL CABINETS

DESCRIPTION
WALL CORNER UNIT WITH TWO ADJUSTABLE SHELVES AND A DOOR HINGED RIGHT.

ITEM	SIZE
CC5	24"Wx30"Hx24"D
CC6	24"Wx24"Hx24"D

DESCRIPTION
WALL CORNER UNIT WITH ONE ADJUSTABLE SHELF AND ONE DOOR WITH A CONTINUOUS PIANO HINGE AT DOOR CENTER.

ITEM	SIZE
CC1	24"Wx30"Hx24"D
CC2	24"Wx24"Hx24"D

DESCRIPTION
WALL CORNER UNIT WITH TWO ADJUSTABLE SHELVES AND A DOOR HINGED LEFT.

ITEM	SIZE
CC7	24"Wx30"Hx24"D
CC8	24"Wx24"Hx24"D

DESCRIPTION
WALL CORNER UNIT WITH ONE ADJUSTABLE SHELF AND ONE DOOR WITH A CONTINUOUS PIANO HINGE AT DOOR CENTER.

ITEM	SIZE
CC3	24"Wx30"Hx24"D
CC4	24"Wx24"Hx24"D

NOTE: ALL CASEWORK CONFIGURATIONS SHOWN MAY NOT BE USED AND DOES NOT REPRESENT THE TOTAL UNITS REQUIRED.

Date Stamped: 04/21/09

Date	Revision	By

USKH
Architecture • Engineering
Land Surveying • Planning

2515 'A' Street
Anchorage, Alaska 99503
(907) 276-4245

544 4th Avenue, Suite 102
Fairbanks, Alaska 99701
(907) 452-2128

3031 Clinton Drive
Suite 200
Juneau, Alaska 99801
(907) 790-2901

351 W Parks Hwy, Suite 200
Wasilla, Alaska 99654
(907) 376-7815

Project:
DOMESTIC VIOLENCE SHELTER

TUNDRA WOMEN'S COALITION
P.O. BOX 2029
250 6th AVENUE
BETHEL, ALASKA 99559

Project Mgr.	JC
Drawn	MAB
Checked	
Date	21 APRIL 2009

Sheet Contents:
EQUIPMENT, FURNISHINGS, CASEWORK SCHEDULE, & DETAILS

Sheet No.:
A9.3

USKH W.O. 1074400

DRAWING NAME: i:\1074400\Dwgs\A\sheets\1074400-A9_3.dwg PLOTTED: Apr 21, 2009 - 11:34am

HEAT RECOVERY UNIT SCHEDULE

	SUPPLY			EXHAUST			PRE-HEAT COIL							HEAT RECOVERY (WINTER)						RE-HEAT COIL							ELECTRICAL			BASIS OF DESIGN		
DESIGNATION	CFM	ESP (IN. W.G.)	AMPS	CFM	ESP (IN. W.G.)	AMPS	MBH	EAT (deg F)	LAT (deg F)	APD	EWT (deg F)	LWT (deg F)	GPM	WPD (FT)	MBH	EAT (deg F)	LAT (deg F)	MBH	EAT (deg F)	LAT (deg F)	APD	EWT (deg F)	LWT (deg F)	GPM	WPD (FT)	FLA	VOLTS	PHASE	MFR.	MODEL	NOTES
HRV-1	420	0.75	5.5	420	0.75	5.5	23.4	-45	5	.08	180	159	2.52	1.31	18.1	5	45	22.9	45	95	0.10	180	160	2.52	2.4	11.0	120	1	FANTECH	SHR 11004	1
HRV-2	305	0.75	2.8	305	0.75	2.8	16.8	-45	5	.07	180	159	1.83	.69	13.2	5	45	17.4	45	95	0.10	180	160	1.83	1.26	5.5	120	1	FANTECH	SHR 6904	1
HRV-3	530	0.75	5.5	530	0.75	5.5	30.1	-45	5	.07	180	159	2.94	1.41	22.9	5	45	29.4	45	95	0.11	180	160	3.18	3.92	11.0	120	1	FANTECH	SHR 11004	1

NOTES:

1. PRE-HEAT/RE-HEAT COIL MOUNTED NEAR UNIT BUT NOT PART OF UNIT CONSTRUCTION, SEE COIL SCHEDULE FOR MORE INFORMATION

BOILER SCHEDULE

DESIGNATION	HEATING FLUID	FUEL TYPE	GROSS OUTPUT (MBH)	NET IBR (MBH)	GPM	EWT (deg F)	LWT (deg F)	ELECTRICAL HP	VOLTS	PHASE	BASIS OF DESIGN MFR.	MODEL	NOTES
B-1	50/50 PG	FO	266	239	27	160	180	–	120	1	BURNHAM	V8H8-W	1
B-2	50/50 PG	FO	266	239	27	160	180	–	120	1	BURNHAM	V8H8-W	1

NOTES:

1. PROVIDE WITH OUTDOOR RESET.

BASEBOARD SCHEDULE

						ELEMENT					BASIS OF DESIGN		
DESIGNATION	BTUH/LF	FLUID	EWT (deg F)	LWT (deg F)	EAT (deg F)	DIA. (IN)	MATERIAL	TIERS	FINS/LF	ENCLOSURE	MFR.	MODEL	NOTES
BB-1	1120	50/50 PG	180	160	65	3/4	CU	1	50	TP-14	BEACON MORRIS	STC-3/4-435	1
BB-2	1120	50/50 PG	180	160	65	3/4	CU	1	40	EXPANDED METAL	BEACON MORRIS	STC-3/4-436	1,2

NOTES:

1. BASEBOARD HAS BEEN DERATED FOR WATER TEMPERATURE AND GLYCOL. HEATING HYDRONIC FLUID IS 50/50 PROPYLENE GLYCOL
2. EXPOSED FINNED TUBE LOCATED IN FLOOR JOIST SPACE OR UTILIDOR

FAN SCHEDULE

						ESP		ELECTRICAL			BASIS OF DESIGN		
DESIGNATION	LOCATION	SERVICE	TYPE	CFM	RPM	(IN W.C.)	DAMPER	WATTS	VOLTS	PHASE	MFR.	MODEL	NOTES
SF-1	MECHANICAL ROOM	SUPPLY FAN	PROP	600	1050	0.125	MOTORIZED	350	120	1	PENN BARRY	P12VA	1
SF-2	MECHANICAL ROOM	SUPPLY FAN	INLINE	400	1050	0.375	MOTORIZED	243	120	1	PENN BARRY	Z10S	1

NOTES:

1. PROVIDE WITH SPEED CONTROLLER AND THERMOSTATIC MIXING CONTROLS

PUMP SCHEDULE

			HEAD			TEMP	ELECTRICAL			BASIS OF DESIGN		
DESIGNATION	SERVICE	GPM	(FT)	FLUID	BODY	(deg F)	HP	VOLTS	PHASE	MFR.	MODEL	NOTES
P-1 A,B	BOILER CIRCULATION	27	10	50/50 PG	CI	180	1/3	115	1	GRUNDFOS	TP32-40	–
P-2 A,B	HYDRONIC CIRCULATION	62	43	50/50 PG	CI	180	1-1/2	208	3	GRUNDFOS	TP40-240	1
P-3	HOT WATER RECIRCULATION	10	15	DOMESTIC WATER	BRONZE	115	1/2	115	1	GRUNDFOS	UPS32-80	–
P-4 A,B	FIRE PROTECTION TANK HEATING	2	10	WATER	CI	80	1/25	1150	1	GRUNDFOS	UP15-42FC/MR	–
P-5 A,B	SEWAGE PUMP	30	75	WASTE	CI	–	2	208	3	LIBERTY	LSG202A	2
P-6 A,B	WASTE LINE HEAT TRACE	2	10	WASTE	CI	80	1/25	115	1	GRUNDFOS	UP15-42FC/MR	–
P-7	CONDENSATE PUMP	58 GPH	8	WASTE	CI	–	1/30	115	1	LITTLE GIANT	VCMA-20UL	–
FP-1	FIRE PUMP PACKAGE	250	35	WATER	CI	–	20	208	3	AURORA	3-383-7B	3

NOTES:

1. WITH VFD
2. SEWAGE BASIN SHALL BE 48" DIAMETER AND 48" DEEP. PROVIDE WITH RAIL SYSTEM.
3. PUMP SELECTION TO BE CONFIRMED BY SPRINKLER DESIGNER, BASIS OF DESIGN

WATER HEATER SCHEDULE

			EGT	LGT	FLOW	RECOVERY	STORAGE	ELECTRICAL			BASIS OF DESIGN		
TAG	LOCATION	MBH	°F	°F	(GPM)	(GPH @90°f RISE	(GAL)	KW	VAC	PHASE	MFR.	MODEL	NOTES
WH-1	MECHANICAL ROOM	90	180	160	10	169	45	–	–	–	SUPER-STOR	SSU-45	–

NOTES:

1.

MECHANICAL/PLUMBING LEGEND

- BALANCING VALVE
- 2-PORT CONTROL VALVE
- 3-PORT CONTROL VALVE
- CHECK VALVE
- GLOBE VALVE
- BUTTERFLY VALVE
- PLUG VALVE
- PRESSURE REDUCING VALVE
- BALL VALVE
- GATE/SHUTOFF VALVE
- SAFETY RELIEF VALVE OR PRESSURE RELIEF VALVE
- ANGLE VALVE
- STRAINER WITH BLOW DOWN VALVE
- AUTOMATIC AIR VENT
- MANUAL AIR VENT
- P & T PLUG
- PIPE CAP
- PIPE UP
- PIPE DOWN
- UNION
- CONCENTRIC REDUCER
- ECCENTRIC REDUCER
- PIPE ELBOW
- PIPE TEE CONNECTION
- PIPE FLANGE
- PIPE ANCHOR
- PIPE GUIDE
- THERMOMETER
- NEEDLE VALVE PRESSURE GAUGE
- STEAM PRESSURE GAUGE
- FIXTURE UNITS
- WATER HAMMER ARRESTER
- PUMP
- METER
- FLEX PIPE CONNECTION
- STEAM TRAP
- YARD CLEANOUT TO GRADE
- FLOOR CLEANOUT
- FLOOR DRAIN
- WALL OR HORIZONTAL CLEANOUT
- ROOF DRAIN
- PIPE OR DUCT BREAK
- HOT WATER BASEBOARD HEATER
- REDUCER
- FLEXIBLE DUCTWORK
- DIRECTION OF AIR FLOW
- CONNECT TO EXISTING
- TURNING VANES
- 18"x22" SHEETMETAL DIMENSIONS
- DUCT INSULATION
- M M MOTOR OPERATED DAMPERS
- FIRE/SMOKE DAMPER
- FIRE DAMPER
- SMOKE DAMPER
- VOLUME DAMPER
- R/A OR E/A DUCT SECTION
- S/A, C/A OR O/A DUCT SECTION
- ROUND DUCT SECTION
- R/A OR E/A DIFFUSER
- S/A, C/A OR O/A DIFFUSER
- T THERMOSTAT OR
- T TIMER
- C CARBON MONOXIDE SENSOR
- C CARBON DIOXIDE SENSOR
- S DUCT SMOKE DETECTOR
- FS FLOW SWITCH
- P STATIC PRESSURE SENSOR
- DP DIFFERENTIAL PRESSURE SENSOR
- VFD VARIABLE FREQUENCY DRIVE
- SD-0 / 000 DIFFUSER DESIGNATION, (E) INDICATES EXISTING CFM
- UH / 1 EQUIPMENT DESIGNATION (UH, CUH, ETC.)
- BB-1 / 0.0 0.0 EQUIPMENT DESIGNATION (BB), FLOW RATE (GPM), ACTIVE ELEMENT LENGTH (FT.)
- 1 SHEET NOTE REFERENCE
- DOMESTIC COLD WATER
- DOMESTIC HOT WATER
- DOMESTIC HOT WATER CIRC.
- SANITARY VENT
- SANITARY WASTE (ABOVEFLOOR)
- SANITARY WASTE (UNDERFLOOR)
- GLYCOL HEATING SUPPLY
- GLYCOL HEATING RETURN
- FUEL OIL SUPPLY
- FUEL OIL RETURN
- PROPANE GAS PIPING

ALL SYMBOLS DO NOT NECESSARILY APPEAR ON DRAWINGS

ABBREVIATIONS

AFF	ABOVE FINISHED FLOOR	GHS	GLYCOL HEATING SUPPLY
AST	ABOVEGROUND STORAGE TANK	GPH	GALLONS PER HOUR
°F	DEGREES FAHRENHEIT	GPM	GALLON PER MINUTE
BB	BASEBOARD	HW	HOT WATER
BTUH	BRITISH THERMAL UNIT PER HOUR	HWR	HEATING WATER RETURN
CFM	CUBIC FEET PER MINUTE	HWS	HEATING WATER SUPPLY
CLG	CEILING	IN	INCHES
CONN	CONNECT	LF	LINEAL FEET
CV	CONTROL VALVE	LWT	LEAVING WATER TEMPERATURE
CW	COLD WATER	MBH	THOUSAND BTUH
DN	DOWN	MIN	MINIMUM
E/A	EXHAUST AIR	MFR	MANUFACTURER
EAT	ENTERING AIR TEMPERATURE	NC	NORMALLY CLOSED
EWT	ENTERING WATER TEMPERATURE	OA, O/A	OUTSIDE AIR
FCO	FLOOR CLEANOUT	P	PROPANE
FD	FIRE DAMPER	PSI	POUNDS PER SQUARE INCH
FDC	FIRE DEPARTMENT CONNECTION	RA, R/A	RETURN AIR
FOR	FUEL OIL RETURN	SA, S/A	SUPPLY AIR
FOS	FUEL OIL SUPPLY	T&P	TEMPERATURE AND PRESSURE
FSD	COMBINATION FIRE SMOKE DAMPER	TYP	TYPICAL
FT WC	FEET OF WATER COLUMN	VFD	VARIABLE FREQUENCY DRIVE
FW	FIRE WATER	W/	WITH
GHR	GLYCOL HEATING RETURN	WCO	WALL CLEANOUT

STATE OF ALASKA 49TH Randy L Rexwinkle ME 11432 REGISTERED PROFESSIONAL ENGINEER 04/21/09

Date Stamped:

Date	Revision	By

USKH

Architecture • Engineering

Land Surveying • Planning

2515 'A' Street
Anchorage, Alaska 99503
(907) 276-4245

544 4th Avenue, Suite 102
Fairbanks, Alaska 99701
(907) 452-2128

3031 Clinton Drive
Suite 200
Juneau, Alaska 99801
(907) 790-2901

351 W Parks Hwy, Suite 200
Wasilla, Alaska 99654
(907) 376-7815

Project:

DOMESTIC VIOLENCE SHELTER

TUNDRA WOMEN'S COALITION

P.O. BOX 2029
250 6th AVENUE
BETHEL, ALASKA 99559

Project Mgr.	JC	
Drawn	JMA	JDP
Checked	RLR	
Date	21 APRIL 2009	

Sheet Contents:

MECHANICAL SCHEDULES, ABBREVIATIONS & LEGEND

Sheet No.:

M1.1

USKH W.O. 1074400

DRAWING NAME: C:\DOCUME~1\JANDER~1\LOCALS~1\Temp\AcPublish_2720\1074400_M11.dwg PLOTTED: Apr 21, 2009 – 11:16am

UNIT HEATER SCHEDULE

DESIGNATION	LOCATION	MBH	CFM	GPM	EWT (deg F)	LWT (deg F)	WPD (FT)	ELECTRICAL HP	VOLTS	PHASE	BASIS OF DESIGN MFR.	MODEL	NOTES
UH–1	MECHANICAL ROOM	24.8	590	2.5	180	160	2.2	1/30	120	1	BEACON MORRIS	HB–125A	–
UH–2	BULK STOR/RECEIVING	24.8	590	2.5	180	160	2.2	1/30	120	1	BEACON MORRIS	HB–125A	–
CUH–1	BREEZEWAY	3.9	–	1	180	160	0.17	1/30	120	1	BEACON MORRIS	TWINFLO–W42	–
CUH–2	REAR CORRIDOR	3.9	–	1	180	160	0.17	1/30	120	1	BEACON MORRIS	TWINFLO–W42	–
CUH–3	VESTIBULE (PORCH)	3.9	–	1	180	160	0.17	1/30	120	1	BEACON MORRIS	TWINFLO–W42	–
CUH–4	CORRIDOR	3.9	–	1	180	160	0.17	1/30	120	1	BEACON MORRIS	TWINFLO–W42	–

NOTES:

1.

MISCELLANEOUS EQUIPMENT SCHEDULE

DESIGNATION	EQUIPMENT	LOCATION	CAPACITY	ELECTRICAL HP	VOLTS	PHASE	BASIS OF DESIGN MFR.	MODEL	NOTES
AS–1	AIR SEPARATOR	MECHANICAL ROOM	–	–	–	–	AMTROL	3 AS–L	–
DT–1	FUEL DAY TANK	MECHANICAL ROOM	50 GAL	–	–	–	SIMPLEX	SRS–50	–
ET–1	EXPANSION TANK	MECHANICAL ROOM	62 GAL	–	–	–	FLEXCON	SXHT 110	–
ET–2	EXPANSION TANK	MECHANICAL ROOM	4.8 GAL	–	–	–	FLEXCON	PH–12	–
FWT–1	FIRE WATER STORAGE TANK	OUTSIDE	7500 GAL	–	–	–	ANCHORAGE TANK	–	–
GMT–1	GLYCOL MAKE UP	MECHANICAL ROOM	1 GPM @ 50 PSIG	85 WATTS	120	1	AXIOM	SF100	–
PT–1	DOMESTIC PRESSURE TANK	MECHANICAL ROOM	86 GAL	–			FLEXCON	WWT85	–

NOTES:

1

COIL SCHEDULE

TAG	AIR SIDE HEAT TRANSFER (MBH)	AIRFLOW (CFM)	EAT (deg F)	LAT (deg F)	APD (IN. W.G.)	FIN DIMS (HxW,IN)	WATER SIDE FLUID	FLOW (GPM)	EGT (deg F)	LGT (deg F)	WPD (FT.W.G.)	BASIS OF DESIGN MFR.	MODEL	NOTES
PHC–1	23.4	425	–45	5	0.05	7.5x18	50%PG	2.52	180	160	1.31	HEATCRAFT	5BS0901A	–
PHC–2	16.8	305	–45	5	0.05	7.5x14	50%PG	1.83	180	160	0.69	HEATCRAFT	5BS0901A	–
PHC–3	29.2	530	–45	5	0.06	7.5x20	50%PG	3.14	180	160	1.35	HEATCRAFT	5BS0801A	–
HC–1	22.9	425	45	95	0.10	7.5X18	50%PG	2.52	180	160	2.40	HEATCRAFT	5BS0902A	–
HC–2	17.5	305	45	95	0.10	7.5X14	50%PG	1.83	180	160	1.26	HEATCRAFT	5BS1002A	–
HC–3	29.4	530	45	95	0.11	7.5X20	50%PG	3.18	180	160	3.92	HEATCRAFT	5BS0902A	–

NOTES:

1.

AIR OUTLET SCHEDULE

DESIGNATION	USE	UNIT SIZE (IN)	PATTERN	SP (IN. W.G.)	NC	BASIS OF DESIGN MFR.	MODEL	NOTES
SA–1	SUPPLY	24X24	4–WAY	<.1	<30	TITUS	DAT	1
SA–2	SUPPLY	6X6	6X6	<.1	<30	TITUS	300R	1
EA–1	EXHAUST	8X6	8X6	<.1	<30	TITUS	50F	1
EA–2	EXHAUST	12X6	12X6	<.1	<30	TITUS	350FL	–

NOTES:

1. COORDINATE BORDER TYPE OF INDIVIDUAL DIFFUSERS/GRILLES WITH CEILING TYPE IN EACH ROOM

HOOD SCHEDULE

TAG	LOCATION	FUNCTION	TYPE	CFM	CONN. SIZE	DAMPER	ELECTRICAL AMPS	VOLTS	PHASE	BASIS OF DESIGN MFR.	MODEL	NOTES
H–1	TAAV CENTER 128	EXHAUST	RANGE	100	3X10	BDD	1.2	120	1	BROAN	643004	–
H–2	BREAK AREA 113	EXHAUST	RANGE	100	3X10	BDD	1.2	120	1	BROAN	643004	–
H–3	KITCHEN 133	EXHAUST	RANGE	100	3X10	BDD	1.2	120	1	BROAN	643004	–
H–4	KITCHEN 133	EXHAUST	RANGE	100	3X10	BDD	1.2	120	1	BROAN	643004	–
H–5	FAMILY SUITE 159	EXHAUST	RANGE	100	3X10	BDD	1.2	120	1	BROAN	643004	–

NOTES:

1.

RADIANT CEILING PANEL SCHEDULE

DESIGNATION	LOCATION	BTUH/LF	GPM	EWT (deg F)	LWT (deg F)	EAT (deg F)	PANEL DIA. (IN)	MATERIAL	SIZE L/W (IN)	BASIS OF DESIGN MFR.	MODEL	NOTES
RCP–1	RESTROOM/BOYS RR	1482	0.5	180	160	70	5/8	ALUMINUM	48/24	SIGMA	MODULAR	1,2
RCP–2	WOMENS RR	1482	0.5	180	160	70	5/8	ALUMINUM	48/24	SIGMA	MODULAR	1,2
RCP–3	LAUNDRY	1482	0.5	180	160	70	5/8	ALUMINUM	48/24	SIGMA	MODULAR	1,2
RCP–4	KITCHEN/DRY FOOD STORAGE	1482	1	180	160	70	5/8	ALUMINUM	48/24	SIGMA	MODULAR	1,2
RCP–5	CLINICIAN/CENTER STORAGE	1482/742	0.5	180	160	70	5/8	ALUMINUM	48/24, 24/24	SIGMA	MODULAR	1,2
RCP–6	WORK ROOM/BREAK AREA	742	1	180	160	70	5/8	ALUMINUM	24/24	SIGMA	MODULAR	1,2
RCP–7	TWC PROGRAM SVCS/TAAV OFFICE	742	0.5	180	160	70	5/8	ALUMINUM	24/24	SIGMA	MODULAR	1,2
RCP–8	WOMENS/MENS RR	1482	0.5	180	160	70	5/8	ALUMINUM	48/24	SIGMA	MODULAR	1,2
RCP–9	LIFT STATION 167	742	0.5	180	160	70	5/8	ALUMINUM	24/24	SIGMA	MODULAR	1,2,3

NOTES:

1. PANEL SHALL BE RECESSED MOUNTED TO MATCH CEILING TYPE, COORDINATE
2. CONTROLLED BY WALL MOUNTED THERMOSTAT, SEE SEQUENCE OF OPERATION
3. CONTROLLED BY WALL MOUNTED THERMOSTAT, THERMOSTAT SHALL BE EXPLOSION PROOF. SEE SEQUENCE OF OPERATION

PLUMBING FIXTURE CONNECTION SCHEDULE

DESIGNATION	FIXTURE	TRAP (IN)	WASTE (IN)	VENT (IN)	CW (IN)	HW (IN)	BASIS OF DESIGN MFR.	MODEL	NOTES
WC–1	WATER CLOSET, FLOOR MOUNT	–	3	2	1	–	AMERICAN STANDARD	2431.01	1
WC–2	WATER CLOSET, CHILD	–	3	2	1	–	AMERICAN STANDARD	2315.016	2
LAV–1	LAVATORY, WALL MOUNT	1 1/2	1 1/2	1 1/4	1/2	1/2	AMERICAN STANDARD	0194.225	3
LAV–2	LAVATORY, COUNTERTOP	1 1/2	1 1/2	1 1/4	1/2	1/2	AMERICAN STANDARD	3409.001	3
UR–1	URINAL	–	2	1 1/2	3/4	–	AMERICAN STANDARD	6501.01	4
SK–1	DOUBLE COMPARTMENT SINK	1 1/4	1 1/4	1 1/2	1/2	1/2	JUST	DL–2233–A–GR	5
SK–2	TRIPLE COMPARTMENT SINK	1 1/4	1 1/4	1 1/2	1/2	1/2	JUST	TEQC–2243–A–GR	5
SK–3	JANITOR SINK	3	3	1 1/2	1/2	1/2	FIAT	MSB–2424	6
SK–4	LAUNDRY SINK	2	2	1 1/2	1/2	1/2	FIAT	L–1	7
SH–1	SHOWER	–	–	–	3/4	3/4	ACC–SSI	A48–36	8
BT–1	BATH TUB				3/4	3/4	AMERICAN STANDARD	2675.002	8
TV–2	TEMPERING VALVE	–	–	–	1 1/2	1 1/2	SYMMONS	5–1000	9
DF–1	DRINKING FOUNTAIN	1 1/4	1 1/4	1 1/4	1/2	–	ELKAY	VRCTLRDDSC	
WB–1	WASHER BOX	–	–	–	1/2	1/2	GUY GRAY	B200	–
HB–1	HOSE BIBB – EXTERIOR	–	–	–	3/4	–	WOODFORD	B67	–
HB–2	HOSE BIBB – MECH. ROOM	–	–	_	3/4	3/4	WOODFORD	HCB67BR	–
FD–1	FLOOR DRAIN – TOILET ROOMS	2	2	1 1/2	1/2	–	ZURN	2240–NT	–
TP–1	TRAP PRIMER	–	–	–	1/2	–	PPP	PR–500	–

NOTES:

1. PROVIDE WITH AMERICAN STANDARD SEAT #5284.016
2. PROVIDE WITH AMERICAN STANDARD SEAT #5385.010
3. PROVIDE WITH AMERICAN STANDARD FAUCET # 1480.110
4. PROVIDE WITH SLOAN FLUSHOMETER #186–1.0
5. IN–SINK–ERATOR MODEL H–770, WASTE DISPOSER (GD–1) IN–SINK–ERATOR MODEL 444, KOHLER FAUCET #K–10413
6. PROVIDE W/ WALL GUARD MODEL MSG–2424, HOSE AND BRACKET MODEL 832–AA, MOP BRACKET MODEL 889 CC, SERVICE FAUCET MODEL 830 AA
7. PROVIDE WITH AMERICAN STANDARD TWO HANDLE LAUNDRY FAUCET–MODEL #7573.140
8. PROVIDE WITH AMERICAN STANDARD SHOWER HEAD, 1660.71
9. TEMPERED WATER BLENDING SYSTEM FOR WATER HEATER

WATER TO WATER HEAT EXCHANGER SCHEDULE

DESIGNATION	PRIMARY SIDE HEAT TRANSFER (BTUH)	FLUID	GPM	EWT (deg F)	LWT (deg F)	MAX PD (FT)	CONN. SIZE (IN.)	SECONDARY SIDE FLUID	GPM	EWT (deg F)	LWT (deg F)	MAX PD (FT)	CONN. SIZE (IN.)	BASIS OF DESIGN MFR.	MODEL	NOTES
HX–1	9006	50/50 PG	1.0	180	160	7	3/4"	50/50 PG	0.6	45	80	2	3/4"	GEA	FP5X12–4(3/4"MPT)	–
HX–2	18,012	50/50 PG	2	180	160	7	3/4"	50/50 PG	1.2	45	80	2.5	3/4"	GEA	FP5X12–6(1/2"MPT)	–

NOTES:

1.

STATE OF ALASKA 49TH Randy L Rexwinkle ME 11432 REGISTERED PROFESSIONAL ENGINEER 04/21/09

Date Stamped:

Date	Revision	By

USKH

Architecture • Engineering

Land Surveying • Planning

2515 'A' Street
Anchorage, Alaska 99503
(907) 276–4245

544 4th Avenue, Suite 102
Fairbanks, Alaska 99701
(907) 452–2128

3031 Clinton Drive
Suite 200
Juneau, Alaska 99801
(907) 790–2901

351 W Parks Hwy, Suite 200
Wasilla, Alaska 99654
(907) 376–7815

Project:

DOMESTIC VIOLENCE SHELTER

TUNDRA WOMEN'S COALITION

P.O. BOX 2029
250 6th AVENUE
BETHEL, ALASKA 99559

Project Mgr.	JC	
Drawn	JMA	JDP
Checked	RLR	
Date	21 APRIL 2009	

Sheet Contents:

MECHANICAL SCHEDULES

Sheet No.:

M1.2

USKH W.O. 1074400

DRAWING NAME: I:\1074400\Dwgs\M\sheets\1074400_M12.dwg PLOTTED: Apr 21, 2009 – 11:16am

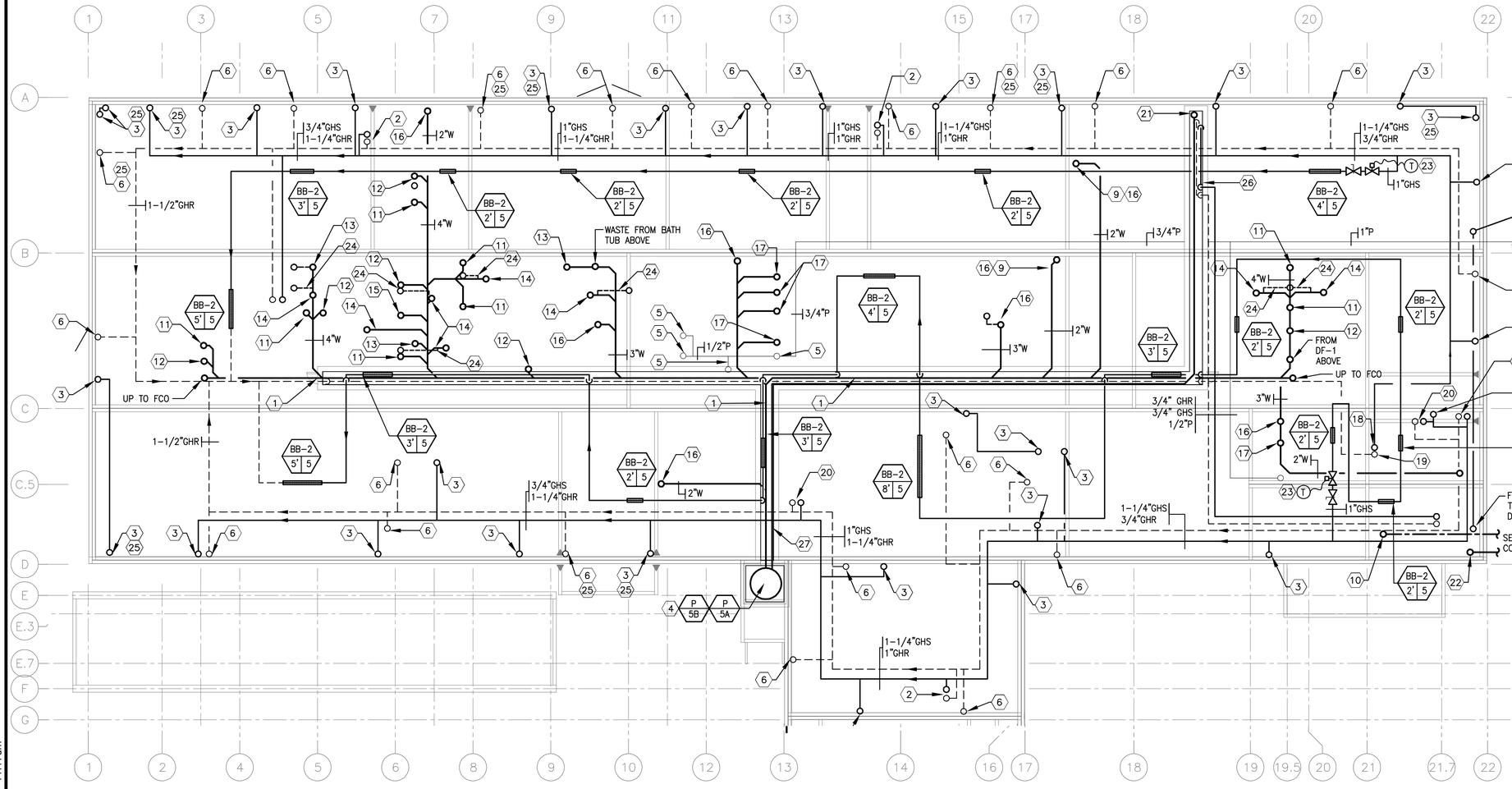

N

1 M2.1 UINDERFLOOR PIPING PLAN

SCALE: 1/8"=1'-0"

GENERAL NOTES

1. WASTE AND VENT PIPING SHALL BE ABS PLASTIC PIPE
2. PIPING THROUGH GLULAM BEAMS SHALL BE DRILLED THROUGH MIDDLE OF BEAM

SHEET NOTES

1. 4" WASTE TO BE ROUTED THROUGH UTILIDOR
2. 3/4"GHS/R UP TO CABINET UNIT HEATER ABOVE
3. 3/4" GHS UP TO BASEBOARD ABOVE THROUGH BEVELLED NOTCH IN GLULAM
4. WASTE TO GRAVITY FEED INTO SEWAGE TANK W/ SEWAGE PUMPS BELOW FLOOR
5. PROPANE UP TO DRYER.
6. 3/4" GHR FROM BASEBOARD ABOVE THROUGH BEVELED NOTCH IN GLULAM
7. ABOVE GROUND FUEL OIL FROM STORAGE TANK, SEE CIVIL FOR CONTINUATION
8. PROPANE LINE FROM TANK, SEE CIVIL FOR CONTINUATION
9. WASTE TO BE OFFSET IN CABINET SPACE BELOW SINK TO AVOID STRUCTURAL BEAM
10. 6" FIRE WATER UP TO MECHANICAL ROOM FROM STORAGE TANK, SEE CIVIL FOR FURTHER INFORMATION.
11. 4" WASTE FROM WATER CLOSET ABOVE
12. 1-1/2" WASTE FROM LAVATORY ABOVE
13. 3" WASTE FROM SHOWER DRAIN ABOVE
14. 2" WASTE FROM FLOOR DRAIN ABOVE
15. 2" WASTE FROM URINAL ABOVE
16. 2" WASTE FROM SINK ABOVE
17. 2" WASTE FROM CLOTHES WASHER ABOVE
18. 1-1/2" GHS FROM MECHANICAL ROOM ABOVE
19. 2" GHR UP TO MECHANICAL ROOM ABOVE
20. 3/4" GHS/GHR UP TO PRE-HEAT COIL
21. 1-1/2" WASTE FROM LIFT STATION. TRANSITION TO 2" PIPE AND ROUTE DOWN THROUGH BOTTOM OF UTILIDOR, SEE CIVIL FOR CONTINUATION.
22. 2" DOMESTIC WATER FROM WELL, UP TO MECHANICAL ROOM
23. THERMOSTAT TO BE LOCATED IN MECHANICAL ROOM. CONTROL VALVE TO BE LOCATED IN WALL ABOVE, SHOWN HERE FOR CLARITY. SEE ARCHITECTURAL FOR ACCESS PANEL LOCATION.
24. 1-1/2" VENT LINE ROUTED BELOW FLOOR
25. GHS/GHR UP AT THIS LOCATION, ROUTE OVER TO BASEBOARD ABOVE PERIMETER WALL
26. 3/4" GHS/R ROUTED UP TO UTILIDOR FOR WASTE PIPING HEAT TRACE
27. 1-1/2" WASTE FROM LIFT STATION ROUTED THROUGH UTILIDOR. PROVIDE TEE AND ISOLATION VALVE FOR CLEANOUT.

STATE OF ALASKA 49TH Randy L Rexwinkle ME 11432 REGISTERED PROFESSIONAL ENGINEER 04/21/09

Date Stamped:

Date	Revision	By

USKH
Architecture • Engineering
Land Surveying • Planning

2515 'A' Street
Anchorage, Alaska 99503
(907) 276-4245

544 4th Avenue, Suite 102
Fairbanks, Alaska 99701
(907) 452-2128

3031 Clinton Drive
Suite 200
Juneau, Alaska 99801
(907) 790-2901

351 W Parks Hwy, Suite 200
Wasilla, Alaska 99654
(907) 376-7815

Project:

DOMESTIC VIOLENCE SHELTER

TUNDRA WOMEN'S COALITION

P.O. BOX 2029
250 6th AVENUE
BETHEL, ALASKA 99559

Project Mgr.	JC
Drawn	JMA
Checked	RLR
Date	21 APRIL 2009

Sheet Contents:

UNDERFLOOR PIPING PLAN

Sheet No.:

M2.1

USKH W.O. 1074400

DRAWING NAME: I:\1074400\Dwgs\M\sheets\1074400_M21.dwg PLOTTED: Apr 21, 2009 - 11:17am

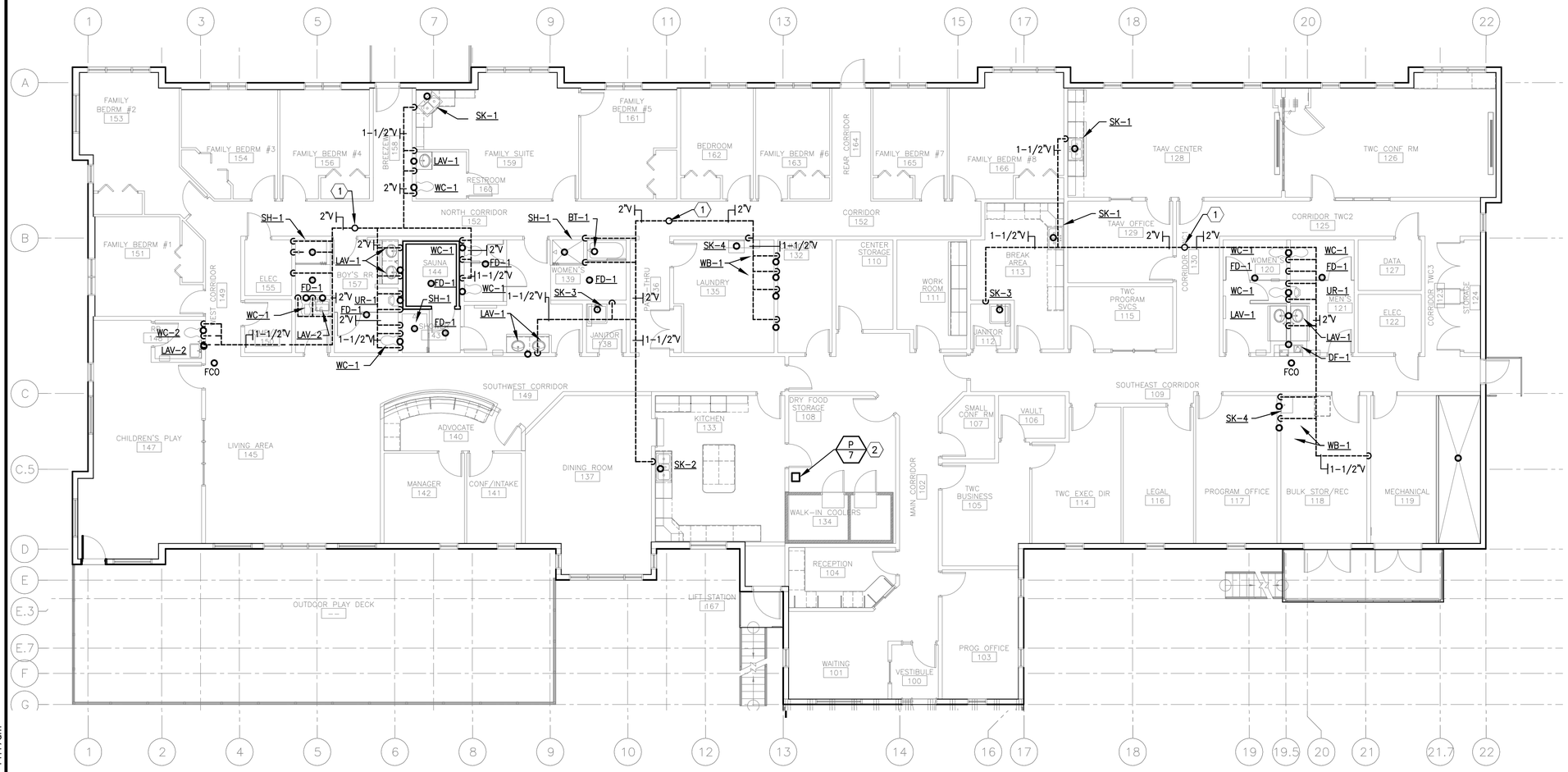

N

1 M2.2 ABOVE FLOOR WASTE AND VENT PLAN

SCALE: 1/8"=1'-0"

SHEET NOTES

1. 2"V UP TO 3"VTR
2. ROUTE 3/4" CONDENSATE LINE ABOVE CEILING AND DOWN TO DISCHARGE INTO MOP SINK IN JANITOR 1

STATE OF ALASKA 49TH Randy L Rexwinkle ME 11432 REGISTERED PROFESSIONAL ENGINEER 04/21/09

Date Stamped:

Date	Revision	By

USKH

Architecture • Engineering

Land Surveying • Planning

2515 'A' Street
Anchorage, Alaska 99503
(907) 276-4245

544 4th Avenue, Suite 102
Fairbanks, Alaska 99701
(907) 452-2128

3031 Clinton Drive
Suite 200
Juneau, Alaska 99801
(907) 790-2901

351 W Parks Hwy, Suite 200
Wasilla, Alaska 99654
(907) 376-7815

Project:

DOMESTIC VIOLENCE SHELTER

TUNDRA WOMEN'S COALITION

P.O. BOX 2029
250 6th AVENUE
BETHEL, ALASKA 99559

Project Mgr.	JC	
Drawn	JMA	JDP
Checked	RLR	
Date	21 APRIL 2009	

Sheet Contents:

ABOVE FLOOR PIPING PLAN

Sheet No.:

M2.2

USKH W.O. 1074400

DRAWING NAME: I:\1074400\Dwgs\M\sheets\1074400_M22.dwg PLOTTED: Apr 21, 2009 - 11:17am

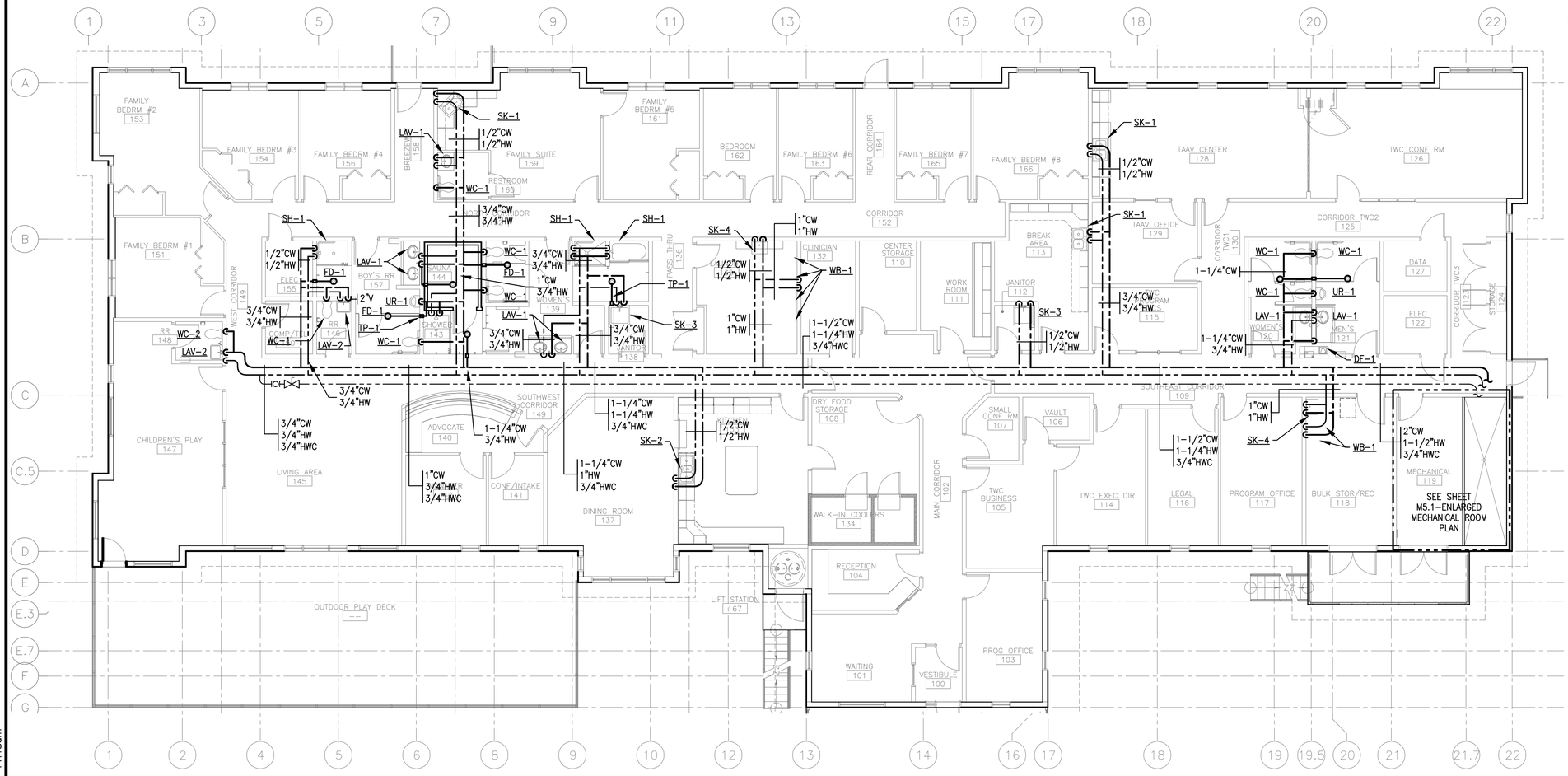

N

1 M2.3 ABOVE FLOOR PIPING PLAN

SCALE: 1/8"=1'-0"

GENERAL NOTES

1. DOMESTIC WATER PIPING LOCATED IN MECHANICAL ROOM SHALL BE COPPER PIPE. DOMESTIC WATER OUTSIDE OF MECHANICAL ROOM SHALL BE PEX PLASTIC TUBING.

SHEET NOTES

1. X

STATE OF ALASKA 49TH Randy L Rexwinkle ME 11432 REGISTERED PROFESSIONAL ENGINEER 04/21/09

Date Stamped:

Date	Revision	By

USKH

Architecture • Engineering

Land Surveying • Planning

2515 'A' Street
Anchorage, Alaska 99503
(907) 276-4245

544 4th Avenue, Suite 102
Fairbanks, Alaska 99701
(907) 452-2128

3031 Clinton Drive
Suite 200
Juneau, Alaska 99801
(907) 790-2901

351 W Parks Hwy, Suite 200
Wasilla, Alaska 99654
(907) 376-7815

Project:

DOMESTIC VIOLENCE SHELTER

TUNDRA WOMEN'S COALITION

P.O. BOX 2029
250 6th AVENUE
BETHEL, ALASKA 99559

Project Mgr.	JC	
Drawn	JMA	JDP
Checked	RLR	
Date	21 APRIL 2009	

Sheet Contents:

ABOVE FLOOR PIPING PLAN

Sheet No.:

M2.3

USKH W.O. 1074400

DRAWING NAME: I:\1074400\Dwgs\M\sheets\1074400_M23.dwg PLOTTED: Apr 21, 2009 - 11:18am

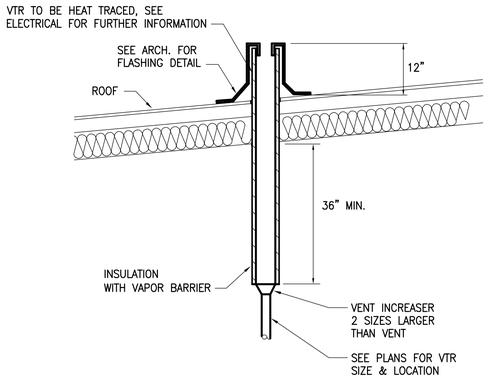

3 / M2.4 VENT THROUGH ROOF DETAIL

SCALE: NONE

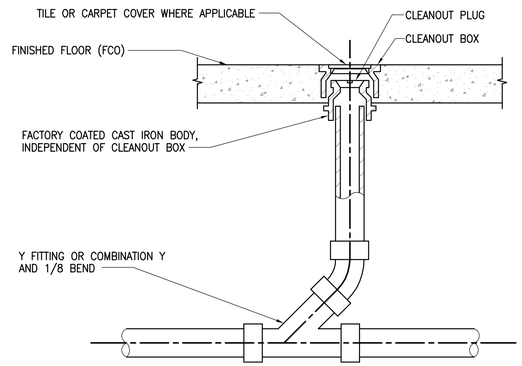

2 / M2.4 FLOOR CLEANOUT DETAIL

SCALE: NONE

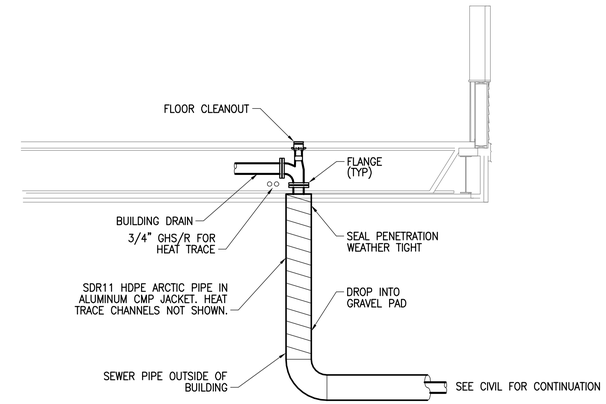

1 / M2.4 BLDG DRAIN EXIT DETAIL

SCALE: NONE

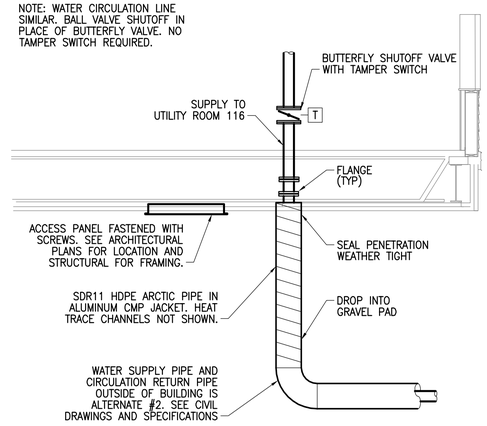

5 / M2.4 WATER SUPPLY ENTRANCE DETAIL

SCALE: NONE

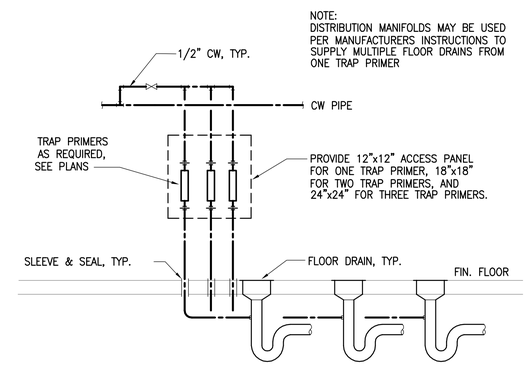

4 / M2.4 TRAP PRIMER DETAIL

SCALE: NONE

STATE OF ALASKA 49TH Randy L Rexwinkle ME 11432 REGISTERED PROFESSIONAL ENGINEER 04/21/09

Date Stamped:

Date	Revision	By

USKH

Architecture • Engineering

Land Surveying • Planning

2515 'A' Street
Anchorage, Alaska 99503
(907) 276-4245

544 4th Avenue, Suite 102
Fairbanks, Alaska 99701
(907) 452-2128

3031 Clinton Drive
Suite 200
Juneau, Alaska 99801
(907) 790-2901

351 W Parks Hwy, Suite 200
Wasilla, Alaska 99654
(907) 376-7815

Project:

DOMESTIC VIOLENCE SHELTER

TUNDRA WOMEN'S COALITION

P.O. BOX 2029
250 6th AVENUE
BETHEL, ALASKA 99559

Project Mgr.	JC	
Drawn	JMA	
Checked	RLR	
Date	21 APRIL 2009	

Sheet Contents:

PLUMBING DETAILS

Sheet No.:

M2.4

USKH W.O. 1074400

DRAWING NAME: I:\1074400\Dwgs\M\sheets\1074400_M24.dwg PLOTTED: Apr 21, 2009 - 11:18am

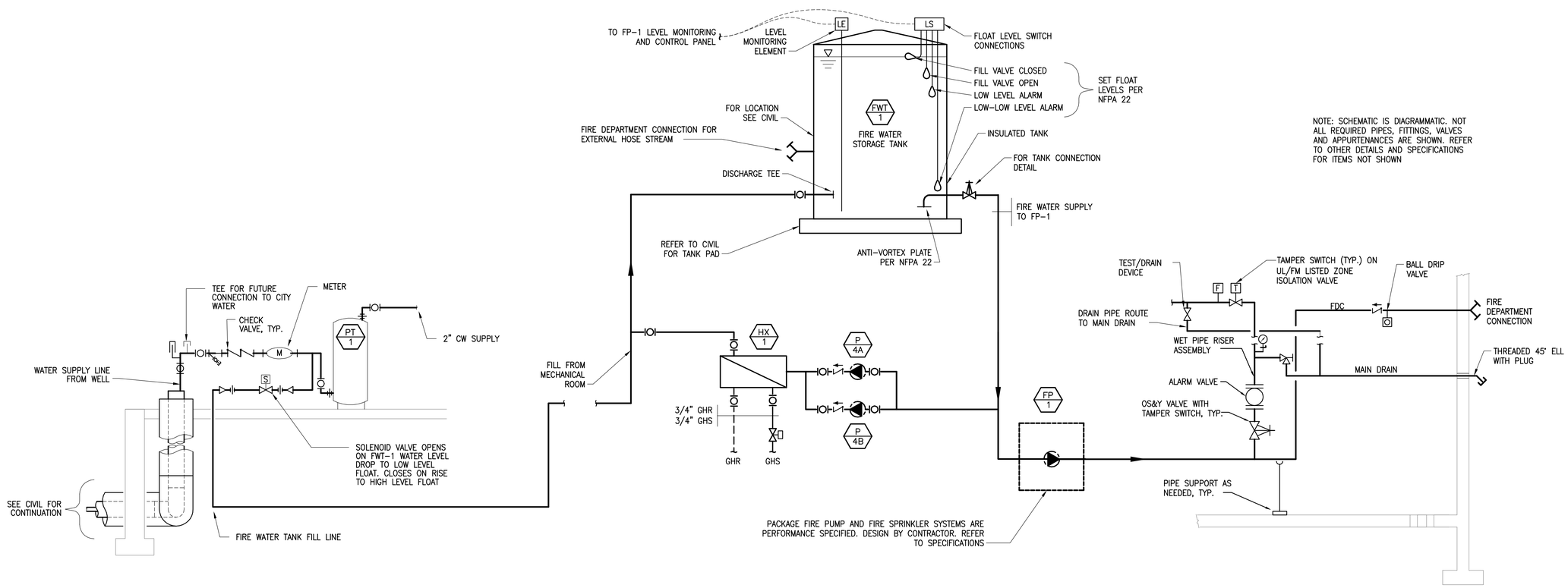

1 M2.5 WATER PIPING SCHEMATIC

SCALE: NTS

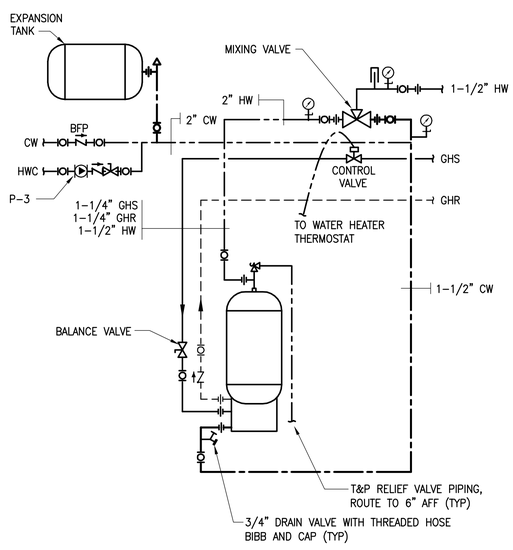

3 M2.5 WATER HEATER DETAIL

SCALE: NTS

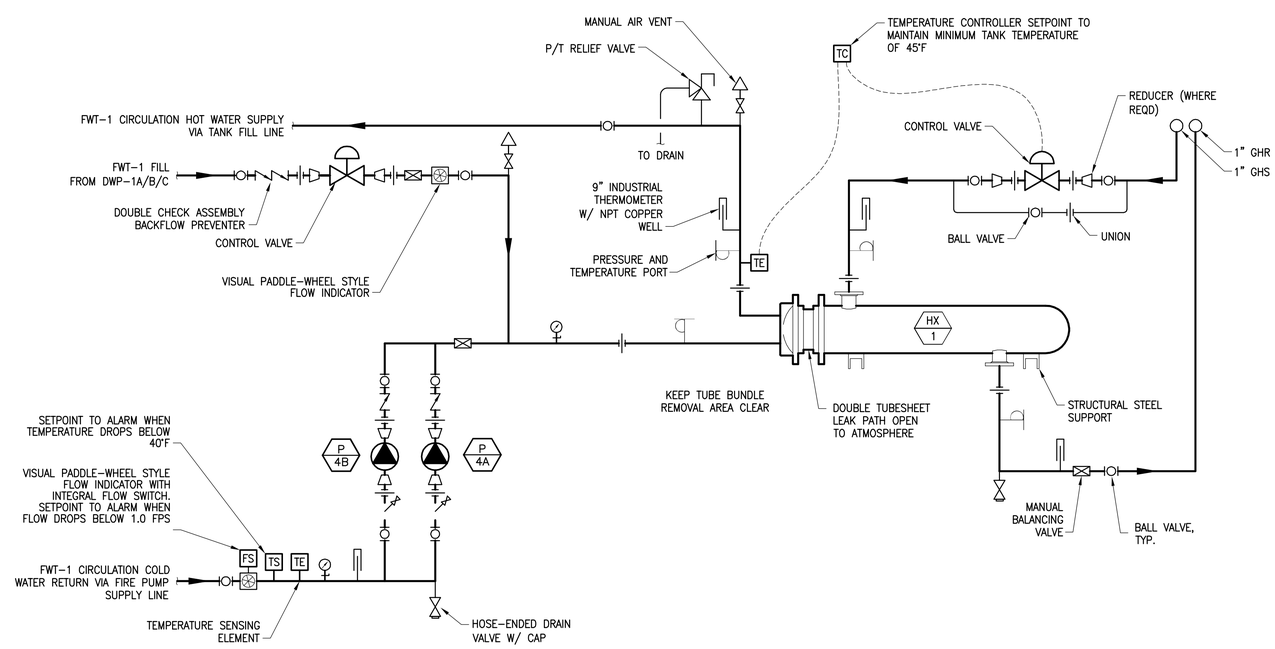

2 M2.5 FIRE WATER FREEZE PROTECTION SCHEMATIC

SCALE: NTS

Date Stamped:

Date	Revision	By

USKH

Architecture • Engineering

Land Surveying • Planning

2515 'A' Street
Anchorage, Alaska 99503
(907) 276-4245

544 4th Avenue, Suite 102
Fairbanks, Alaska 99701
(907) 452-2128

3031 Clinton Drive
Suite 200
Juneau, Alaska 99801
(907) 790-2901

351 W Parks Hwy, Suite 200
Wasilla, Alaska 99654
(907) 376-7815

Project:

DOMESTIC VIOLENCE SHELTER

TUNDRA WOMEN'S COALITION

P.O. BOX 2029
250 6th AVENUE
BETHEL, ALASKA 99559

Project Mgr.	JC
Drawn	JMA
Checked	RLR
Date	21 APRIL 2009

Sheet Contents:

PLUMBING DETAILS & SCHEMATICS

Sheet No.:

M2.5

USKH W.O. 1074400

DRAWING NAME: I:\1074400\Dwgs\M\sheets\1074400_M25.dwg PLOTTED: Apr 21, 2009 - 11:18am

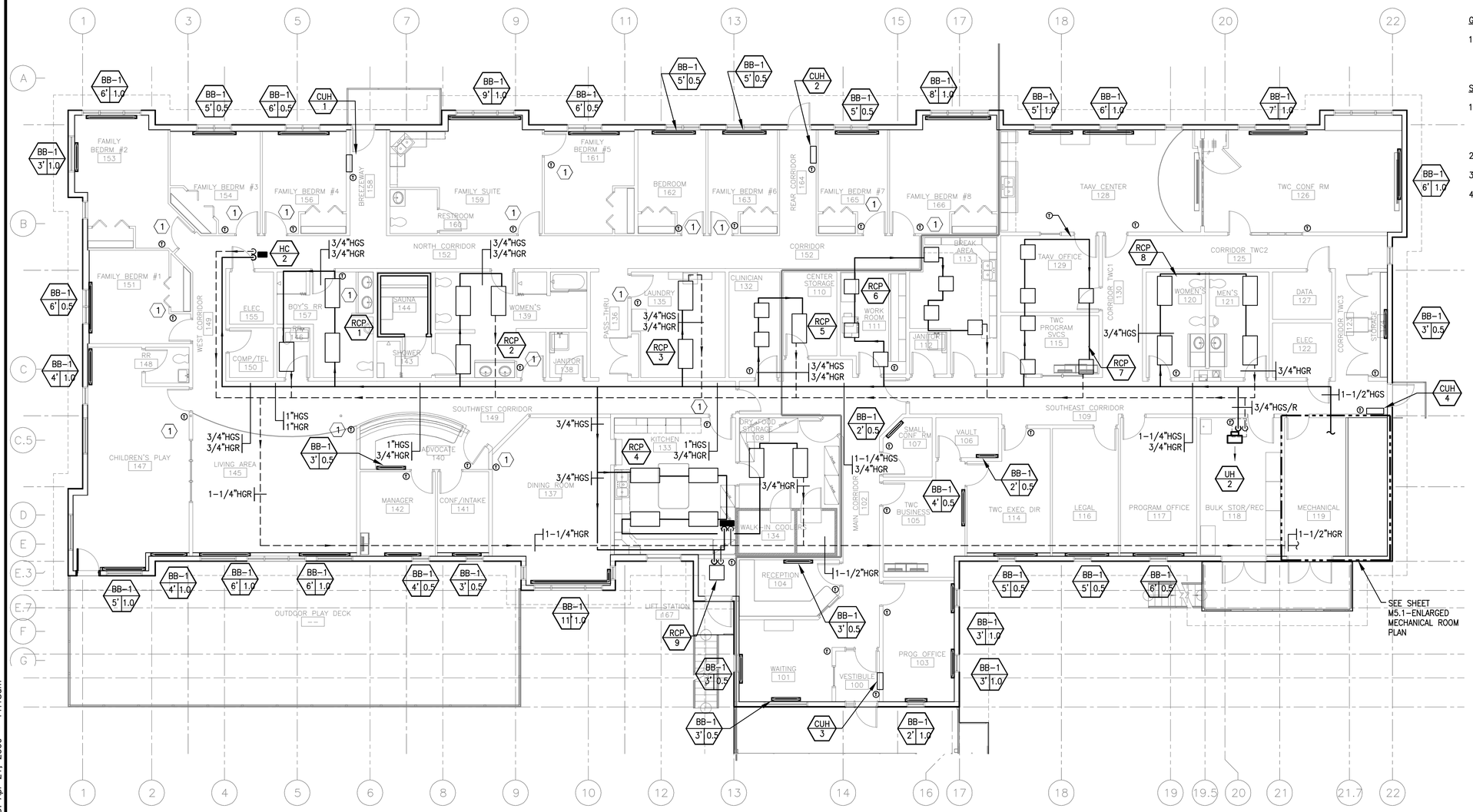

1 M3.1 HEATING PLAN

SCALE: 1/8"=1'-0"

GENERAL NOTES

1. XYZ

SHEET NOTES

1. PROVIDE THERMOSTAT AT THIS LOCATION WITH HIGH IMPACT PLASTIC GUARD. THERMOSTAT SHALL HAVE LIMITED ADJUSTABLE CONTROL +/- 5°F FROM SETPOINT.
2. THERMOSTAT SHALL BE EXPLOSION PROOF
3.
4.

STATE OF ALASKA 49TH Randy L Rexwinkle ME 11432 REGISTERED PROFESSIONAL ENGINEER 04/21/09

Date Stamped:

Date	Revision	By

USKH

Architecture • Engineering

Land Surveying • Planning

2515 'A' Street
Anchorage, Alaska 99503
(907) 276-4245

544 4th Avenue, Suite 102
Fairbanks, Alaska 99701
(907) 452-2128

3031 Clinton Drive
Suite 200
Juneau, Alaska 99801
(907) 790-2901

351 W Parks Hwy, Suite 200
Wasilla, Alaska 99654
(907) 376-7815

Project:

DOMESTIC VIOLENCE SHELTER

TUNDRA WOMEN'S COALITION

P.O. BOX 2029
250 6th AVENUE
BETHEL, ALASKA 99559

Project Mgr.	JC	
Drawn	JMA	JDP
Checked	RLR	
Date	21 APRIL 2009	

Sheet Contents:

HEATING PLAN

Sheet No.:

M3.1

USKH W.O. 1074400

DRAWING NAME: I:\1074400\Dwgs\M\sheets\1074400_M31.dwg PLOTTED: Apr 21, 2009 - 11:18am

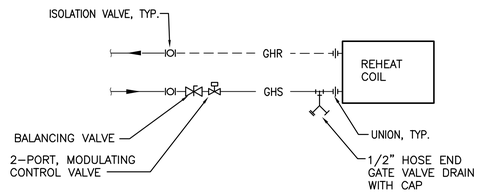

3 M3.2 HEATING COIL (2-WAY CONTROL)
SCALE: NONE

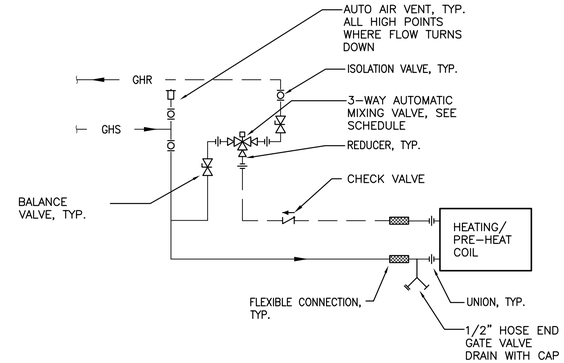

2 M3.2 HEATING COIL (3-WAY CONTROL)
SCALE: NONE

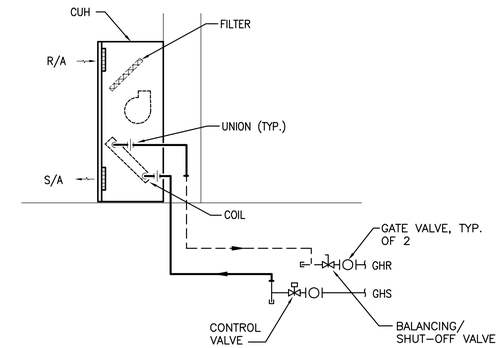

1 M3.2 WALL- CABINET UNIT HEATER DETAIL
SCALE: NONE

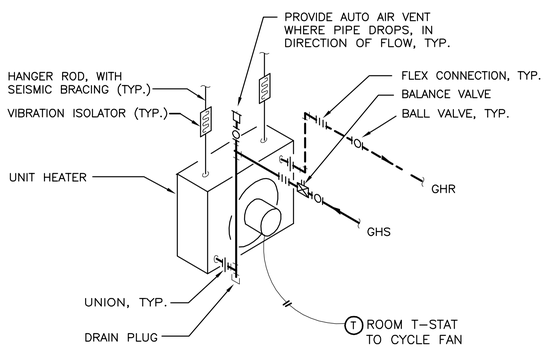

6 M3.2 DETAIL – (TYP.) HORIZ. UNIT HEATER
SCALE: NONE

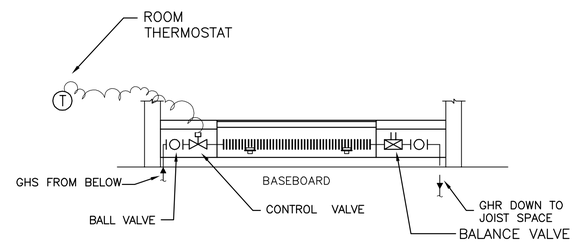

5 M3.2 DETAIL – BASEBOARD HEATER PIPING
SCALE: NONE

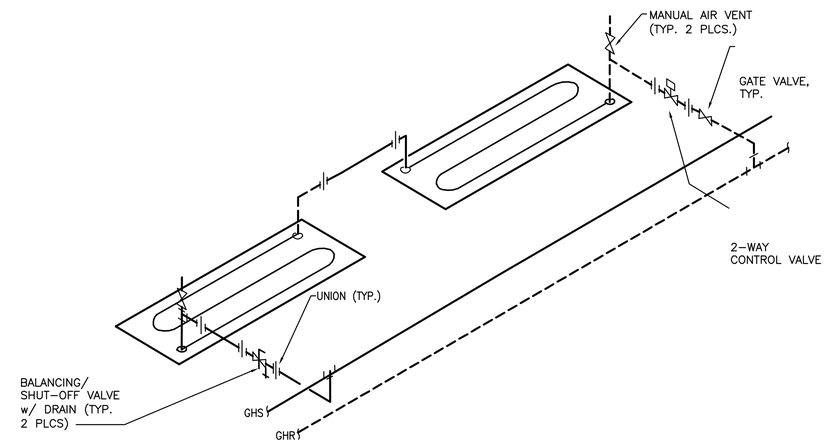

4 M3.2 DETAIL – RADIANT CEILING PANEL
SCALE: NONE

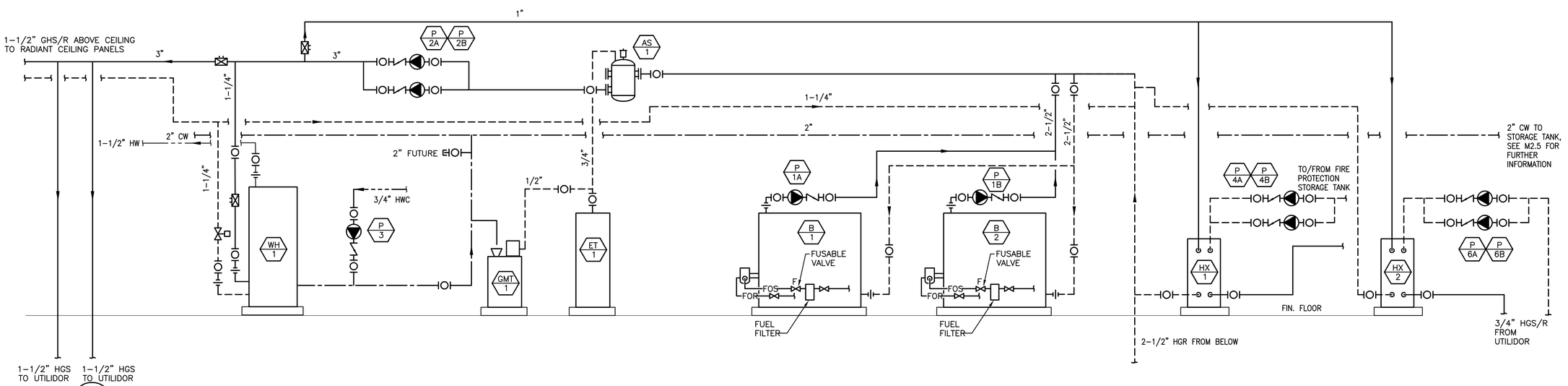

7 M3.2 HEATING SCHEMATIC
SCALE: NONE

DRAWING NAME: I:\1074400\Dwgs\M\sheets\1074400_M32.dwg PLOTTED: Apr 21, 2009 - 11:19am

STATE OF ALASKA 49TH Randy L Rexwinkle ME 11432 REGISTERED PROFESSIONAL ENGINEER 04/21/09

Date Stamped:

Date	Revision	By

USKH

Architecture • Engineering
Land Surveying • Planning

2515 'A' Street
Anchorage, Alaska 99503
(907) 276-4245

544 4th Avenue, Suite 102
Fairbanks, Alaska 99701
(907) 452-2128

3031 Clinton Drive
Suite 200
Juneau, Alaska 99801
(907) 790-2901

351 W Parks Hwy, Suite 200
Wasilla, Alaska 99654
(907) 376-7815

Project:
DOMESTIC VIOLENCE SHELTER

TUNDRA WOMEN'S COALITION
P.O. BOX 2029
250 6th AVENUE
BETHEL, ALASKA 99559

Project Mgr.	JC	
Drawn	JMA	JDP
Checked	RLR	
Date	21 APRIL 2009	

Sheet Contents:
HEATING DETAILS

Sheet No.:
M3.2

USKH W.O. 1074400

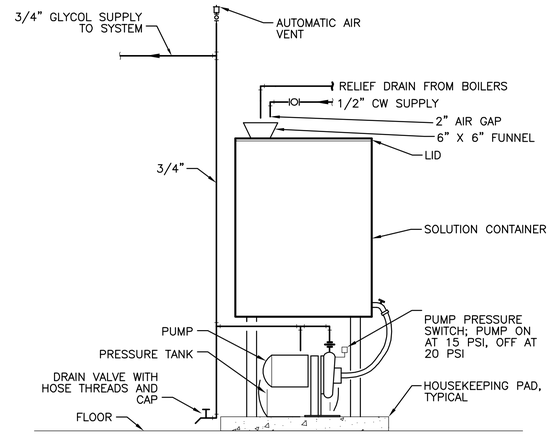

2 / M3.3 GLYCOL MAKE-UP TANK DETAIL

SCALE: 1/8"=1'-0"

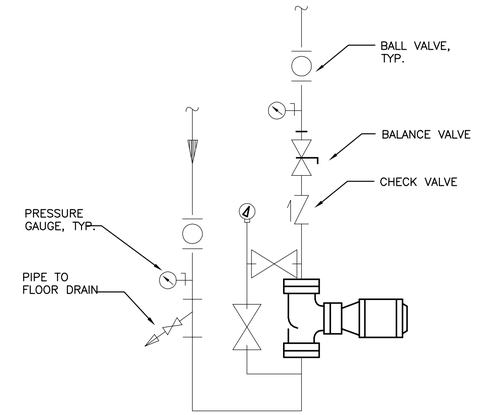

1 / M3.3 INLINE PUMP DETAIL

SCALE: 1/8"=1'-0"

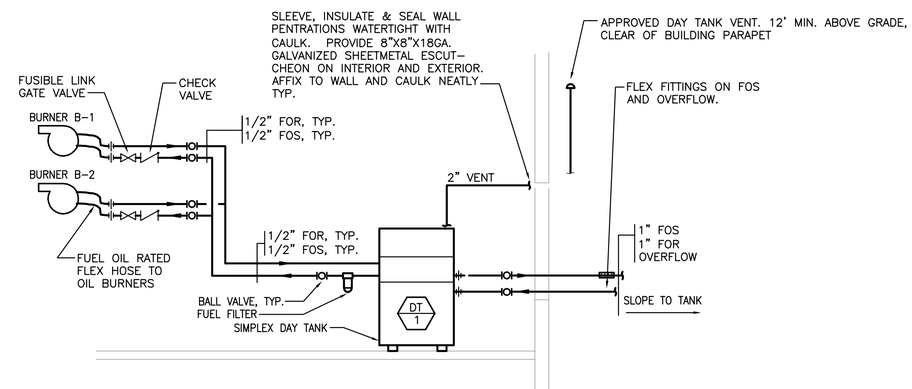

1 / 3 DAY TANK DETAIL

SCALE: 1/8"=1'-0"

STATE OF ALASKA 49TH Randy L Rexwinkle ME 11432 REGISTERED PROFESSIONAL ENGINEER 04/21/09

Date Stamped:

Date	Revision	By

USKH

Architecture • Engineering

Land Surveying • Planning

2515 'A' Street
Anchorage, Alaska 99503
(907) 276-4245

544 4th Avenue, Suite 102
Fairbanks, Alaska 99701
(907) 452-2128

3031 Clinton Drive
Suite 200
Juneau, Alaska 99801
(907) 790-2901

351 W Parks Hwy, Suite 200
Wasilla, Alaska 99654
(907) 376-7815

Project:

DOMESTIC VIOLENCE SHELTER

TUNDRA WOMEN'S COALITION

P.O. BOX 2029
250 6th AVENUE
BETHEL, ALASKA 99559

Project Mgr.	JC	
Drawn	JMA	JDP
Checked	RLR	
Date	21 APRIL 2009	

Sheet Contents:

HEATING DETAILS

Sheet No.:

M3.3

USKH W.O. 1074400

DRAWING NAME: I:\1074400\Dwgs\M\sheets\1074400_M33.dwg PLOTTED: Apr 21, 2009 - 11:19am

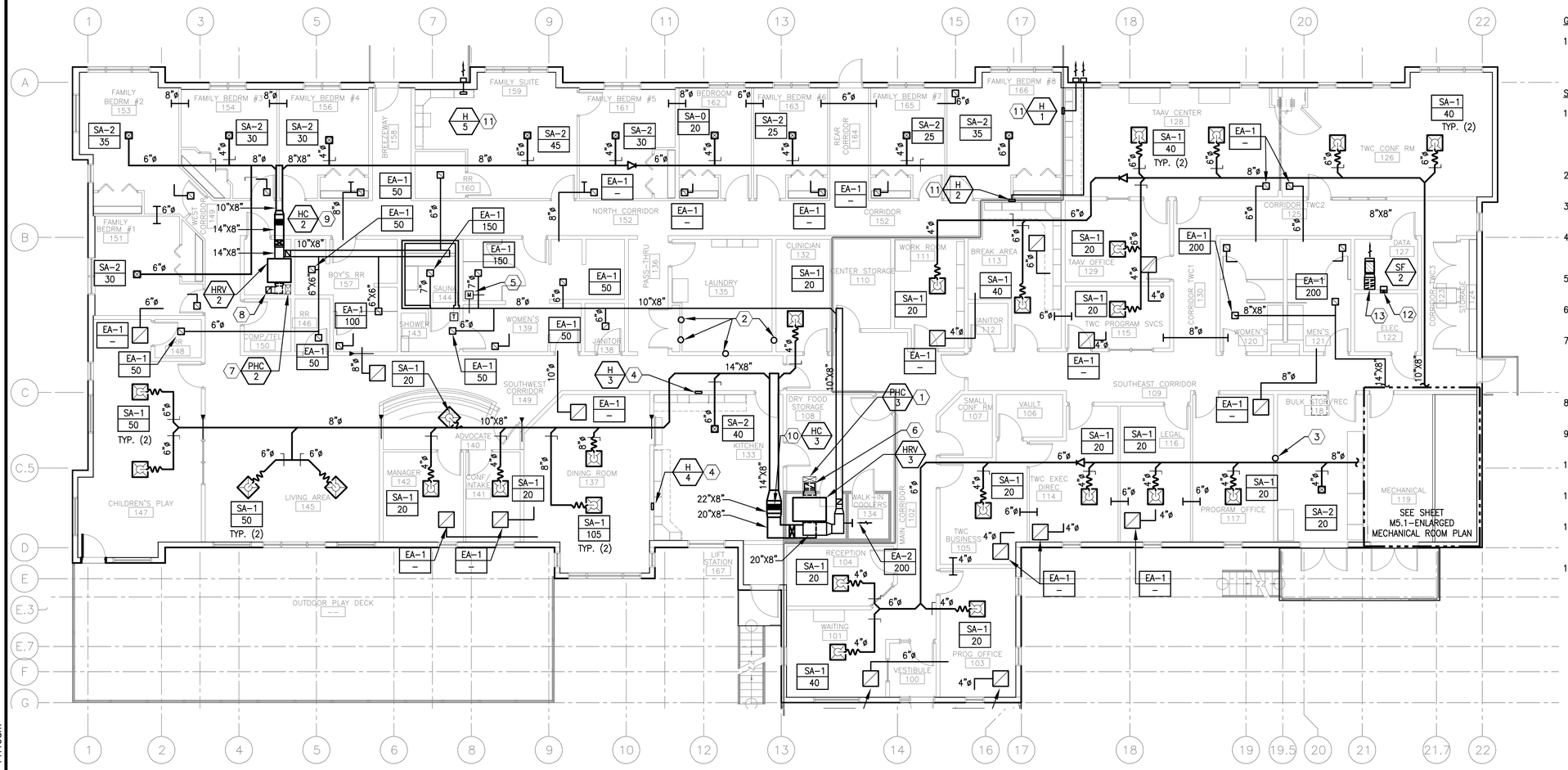

N

1 M4.1 VENTILATION PLAN

SCALE: 1/8"=1'-0"

GENERAL NOTES

1. XYXZ

SHEET NOTES

1. 20"X8" OUTSIDE AIR DUCT UP FROM BELOW THE BUILDING, FNISHED WITH BIRDSCREEN. 7.5"X20" PREHEAT COIL TO BE MOUTED ABOVE FINISH FLOOR VERTICAL SECTION OF DUCT. INSTALL SHEET METAL BLOCKING AROUND COIL.
2. 4"ø DRYER EXHAUST. ROUTE DOWN IN WALL TO DISCHARGE BELOW THE BUILDING
3. 8"ø DRYER EXHAUST. ROUTE DOWN IN WALL TO DISCHARGE BELOW THE BUILDING
4. 3-1/4"X10" RANGE EXHAUST. ROUTE DOWN IN WALL TO DISCHARGE BELOW THE BUILDING, TERMINATE WITH BIRDSCREEN.
5. MOTORIZED DAMPER SHALL CHANGE POSITIONS WITH ACTIVATION OF TIMER
6. 16"X8" EXHUAST AIR DUCT DOWN TO DISCHARGE BELOW THE BUILDING, TERMINATE WITH BIRDSCREEN.
7. 14"X8" OUTSIDE AIR DUCT UP FROM BELOW THE BUILDING, FINISHED WITH BIRDSCREEN. 7.5"X14" PREHEAT COIL TO BE MOUTED ABOVE FINISH FLOOR VERTICAL SECTION OF DUCT. INSTALL SHEET METAL BLOCKING AROUND COIL.
8. 10"X8" EXHUAST AIR DUCT DOWN TO DISCHARGE BELOW THE BUILDING, TERMINATE WITH BIRDSCREEN.
9. 7.5"X14" HEATING COIL, INSTALL SHEET METAL BLOCKING AROUND COIL.
10. 7.5"X22" HEATING COIL, INSTALL SHEET METAL BLOCKING AROUND COIL.
11. ROUTE 3-1/4X10" RANGE EXHAUST TO EXTERIOR WALL AND TERMINTE WITH WALL CAP.
12. 3-1/4"X10" RELIEF AIR, ROUTE DOWN BELOW BUILDING, DISCHARGE BELOW BUILDING, TERMINATE WITH BIRDSCREEN.
13. 16"X6" DUCT FROM BELOW BUILDING, PENETRATION THROUGH THE FLOOR SHALL BE FINISHED WITH BIRDSCREEN. ROUTE UP TO SUPPLY FAN

STATE OF ALASKA 49TH Randy L Rexwinkle ME 11432 REGISTERED PROFESSIONAL ENGINEER 04/21/09

Date Stamped:

Date	Revision	By

USKH
Architecture • Engineering
Land Surveying • Planning

2515 'A' Street
Anchorage, Alaska 99503
(907) 276-4245

544 4th Avenue, Suite 102
Fairbanks, Alaska 99701
(907) 452-2128

3031 Clinton Drive
Suite 200
Juneau, Alaska 99801
(907) 790-2901

351 W Parks Hwy, Suite 200
Wasilla, Alaska 99654
(907) 376-7815

Project:

DOMESTIC VIOLENCE SHELTER

TUNDRA WOMEN'S COALITION

P.O. BOX 2029
250 6th AVENUE
BETHEL, ALASKA 99559

Project Mgr.	JC	
Drawn	JMA	
Checked	RLR	
Date	21 APRIL 2009	

Sheet Contents:

VENTILATION PLAN

Sheet No.:

M4.1

USKH W.O. 1074400

DRAWING NAME: I:\1074400\Dwgs\M\sheets\1074400_M41.dwg PLOTTED: Apr 21, 2009 - 11:19am

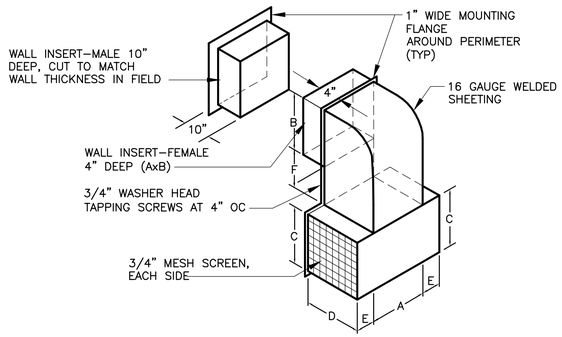

LOCATION	SERVICE	A	B	C	D	E	F
MECHANICAL	SF–1	17"	17"	17"	17"	8"	8"
MECHANICAL	BOILER C/A	14"	14"	14"	14"	7"	7"

2 / M5.1 INTAKE/EXHAUST HOOD DETAIL

SCALE: NTS

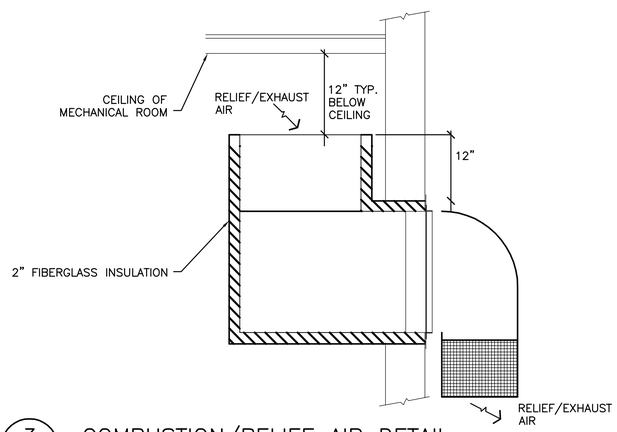

3 / M5.1 COMBUSTION/RELIEF AIR DETAIL

SCALE: NTS

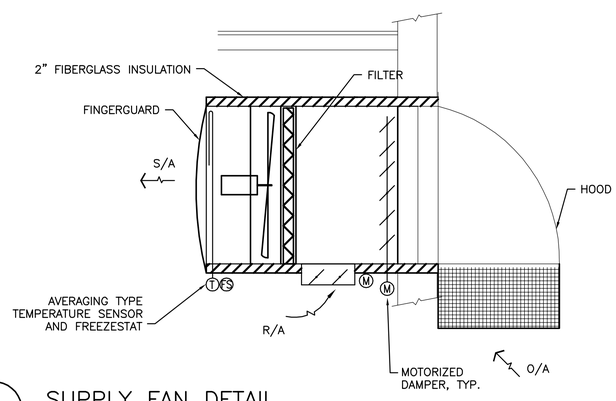

4 / M5.1 SUPPLY FAN DETAIL

SCALE: NTS

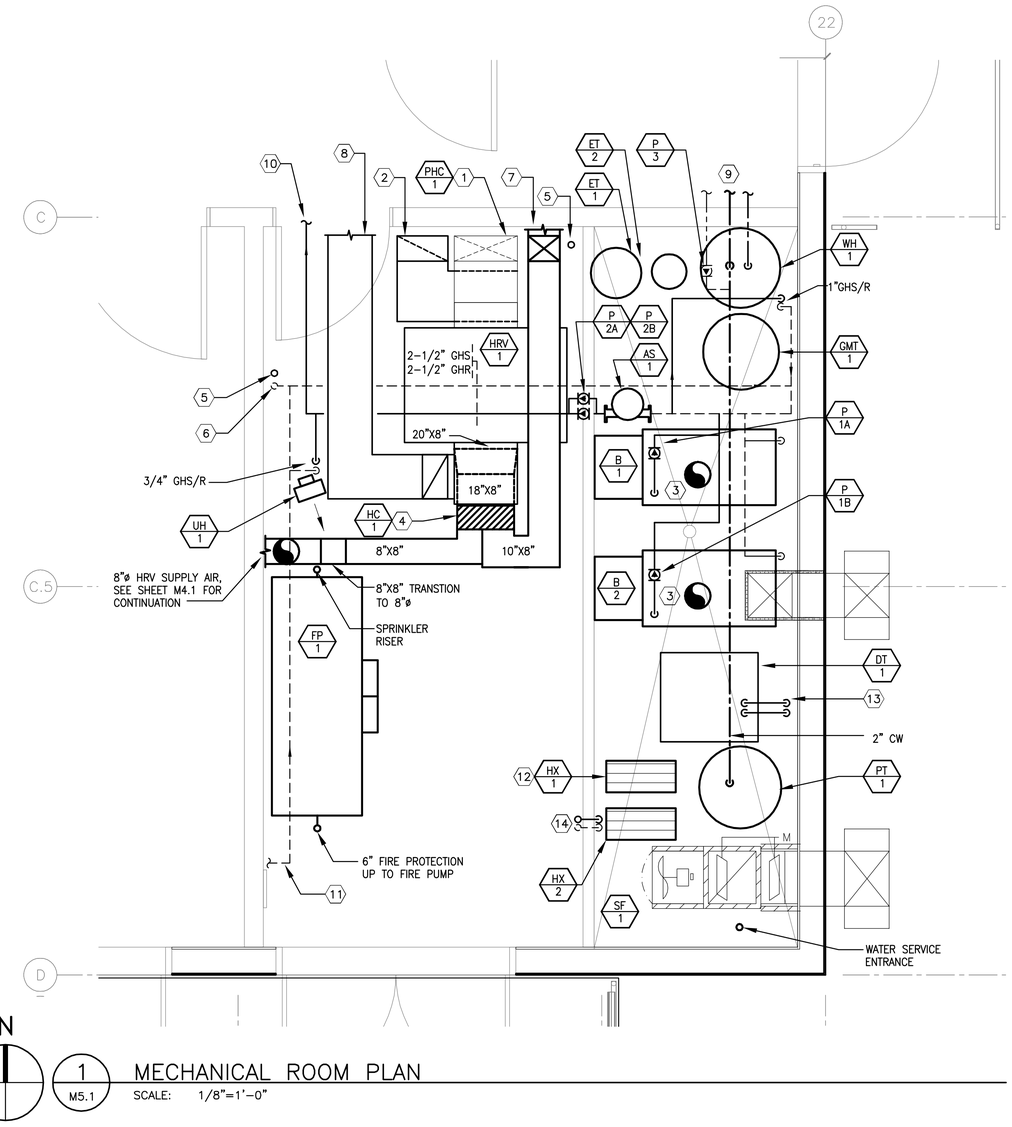

1 / M5.1 MECHANICAL ROOM PLAN

SCALE: 1/8"=1'–0"

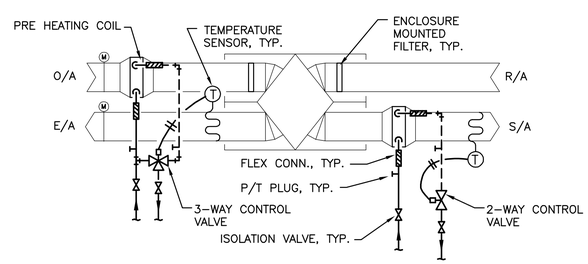

5 / M5.1 SUPPLY FAN DETAIL

SCALE: NTS

SHEET NOTES

1. 20"X8" OUTSIDE AIR DUCT UP FROM BELOW THE BUILDING. 7.5"X18" PREHEAT COIL TO BE MOUTED ABOVE FINISH FLOOR IN VERTICAL SECTION OF DUCT. INSTALL SHEET METAL BLOCKING AROUND COIL.
2. 20"X8" EXHUAST AIR DUCT DOWN TO DISCHARGE BELOW THE BUILDING
3. 8" BOILER FLUE UP THROUGH ROOF. SEE ARCHITECTURAL FOR ROOF PENETRATION DETAIL
4. 7.5"X18" HEATING COIL, INSTALL SHEET METAL BLOCKING AROUND COIL.
5. 1–1/2" GHS DOWN TO SUPPLY BELOW FLOOR
6. 2" GHR FROM BELOW
7. 10"X8" HRV SUPPLY AIR, SEE SHEET M4.1 FOR CONTINUATION
8. 14"X8" HRV RETURN AIR, SEE SHEET M4.1 FOR CONTINUATION
9. 2" CW, 1–1/2" HW, 3/4" HWC SEE SHEET M2.3 FOR CONTINUATION
10. 1–1/2" GHS, SEE SHEET M3.1 FOR CONTINUATION
11. 1–1/2" GHR, SEE SHEET M3.1 FOR CONTINUATION
12. HEAT EXCHANGER FOR FIRE WATER TANK FREEZE PROTECTION, SEE DETAIL ON SHEET M2.5 FOR PIPING CONFIGURATION
13. FOS/R FROM STORAGE TANK, SEE SHEET M2.1 FOR ABOVE GRADE ROUTING UNDER BUILDING
14. 3/4" GHS/R DOWN BELOW FLOOR. ROUTE TO UTILODOR FOR WASTE LINE HEAT TRACE.

STATE OF ALASKA 49TH Randy L Rexwinkle ME 11432 REGISTERED PROFESSIONAL ENGINEER 04/21/09

Date Stamped:

Date	Revision	By

USKH
Architecture • Engineering
Land Surveying • Planning
2515 'A' Street
Anchorage, Alaska 99503
(907) 276–4245
544 4th Avenue, Suite 102
Fairbanks, Alaska 99701
(907) 452–2128
3031 Clinton Drive
Suite 200
Juneau, Alaska 99801
(907) 790–2901
351 W Parks Hwy, Suite 200
Wasilla, Alaska 99654
(907) 376–7815

Project:
DOMESTIC VIOLENCE SHELTER

TUNDRA WOMEN'S COALITION
P.O. BOX 2029
250 6th AVENUE
BETHEL, ALASKA 99559

Project Mgr.	JC	
Drawn	JMA	JDP
Checked	RLR	
Date	21 APRIL 2009	

Sheet Contents:
MECHANICAL ROOM PLAN & DETAILS

Sheet No.:
M5.1

USKH W.O. 1074400

DRAWING NAME: I:\1074400\Dwgs\M\sheets\1074400_M51.dwg PLOTTED: Apr 21, 2009 – 11:19am

LIGHT FIXTURE SCHEDULE

ID	DESCRIPTION	FIXTURE VOLTAGE	FIXTURE WATTS	LAMPS NO.	LAMPS TYPE	BALLAST NO.	BALLAST TYPE	MOUNTING	MTG HEIGHT	CLG TYPE	MANUFACTURERS CATALOG NO.	NOTES
A	2x4 PARABOLIC FLUORESCENT	120	92	3	F32T8	2	ELEC	RECESSED	–	GRID	LITHONIA 2PM3N–B–18LD–2R	1
B	2x4 LENSED FLUORESCENT	120	61	2	F32T8	1	ELEC	RECESSED	–	GRID	LITHONIA 2SP8–A12125	1
C	2x2 LENSED FLUORESCENT	120	67	2	F40BX	1	ELEC	RECESSED	–	GRID	LITHONIA 2SP8–A12125	1
D	WRAPAROUND	120	61	2	F32T8	1	ELEC	SURFACE	–	GWB	LITHONIA LB	1
E	EXIT SIGN	120	–	–	LED	–	–	WALL	6" ABV DR FRM	–	LITHONIA LQM–S–W–R–EL N	
EM	BATTERY PACK	120	–	–	–	–	–	WALL	8'–0"	–	LITHONIA ELM1254–R0	
F	VAPORTIGHT FLUORESCENT	120	61	2	F32T8	1	ELEC	SURFACE	–	GWB	LITHONIA DMSW	
G	WALL BRACKET	120	61	2	F32T8	1	ELEC	WALL	7'–0"	–	LITHONIA WP	
H	1x4 LENSED FLUORESCENT	120	61	2	F32T8	1	ELEC	RECESSED	–	GWB	LITHONIA SP8–A12125	1
J	2x4 DIRECT/INDIRECT FLUORESCENT	120	61	2	F32T8	1	ELEC	RECESSED	–	GRID	LITHONIA 2AV–SBL	1
K	BEDROOM FIXTURE	120	65	2	32W TRT	1	ELEC	SURFACE	–	GWB	TERON LIGHTING REGC20	
L	6" FLUORESCENT DOWNLIGHT	120	35	1	32W TRT	1	ELEC	RECESSED	–	GWB	LITHONIA AF–6AR	
M	2x2 DIRECT/INDIRECT FLUORESCENT	120	67	2	F40BX	1	ELEC	RECESSED	–	GRID	LITHONIA 2AV–SBL	1
N	UNDERCABINET LIGHT	120	31	1	F32T8	1	ELEC	CABINET	–	–	LITHONIA N2S	
P	HAZARDOUS LOCATION FLUORESCENT	120	61	2	F32T8	1	ELEC	SURFACE	–	GWB	PARAMOUNT HL4–5	
OA	WALL PACK	120	88	1	70W MH	1	HPF	WALL	7'–6"	–	LITHONIA WST–MD	
OAE	WALL PACK WITH EM LAMP	120	88	1 1	70W MH 35W MR11	1	HPF	WALL	7'–6"	–	LITHONIA WST–MD–DC12	2
OB	WALL PACK	120	88	1	70W MH	1	HPF	WALL	8'–6"	–	LITHONIA WST–FT	
OBE	WALL PACK WITH EM LAMP	120	88	1 1	70W MH 35W MR11	1	HPF	WALL	7'–6"	–	LITHONIA WST–FT–DC12	2

ABBREVIATIONS:

GWB = GYPSUM WALL BOARD
GRID = LAY–IN GRID
STR = EXPOSED STRUCTURE
ELEC = ELECTRONIC
HPF = HIGH POWER FACTOR
CWA = CONSTANT WATTAGE AUTOTRANSFORMER
MH = METAL HALIDE
HPS = HIGH PRESSURE SODIUM
QTZ = QUARTZ
SFP = SEE FLOOR PLAN
SMHS = SEE MOUNTING HEIGHT SCHEDULE

GENERAL NOTES:

1. MOUNTING HEIGHTS SHOWN ARE TYPICAL FOR FIXTURE TYPE UNLESS OTHERWISE INDICATED ON THE DRAWINGS.

LIGHT FIXTURE SCHEDULE NOTES:

1. PROVIDE EMERGENCY LIGHTS (AS INDICATED ON PLAN) WITH INTEGRAL BATTERY BACKUP TO SERVE 2–LAMPS MINIMUM.
2. PROVIDE A TYPE EM FIXTURE FOR EACH TYPE OAE AND TYPE OBE FIXTURE. LOCATE TYPE EM FIXTURE INSIDE THE BUILDING AND CONNECT TO SERVE THE EMERGENCY LAMP IN THE TYPE OAE OR OBE FIXTURE.

ELECTRICAL LEGEND

LIGHTING

A — LIGHTING FIXTURE DESIGNATION
FLUORESCENT LIGHT FIXTURE, SURFACE MOUNT
FLUORESCENT LIGHT FIXTURE, RECESS MOUNT
FLUORESCENT EMERGENCY LIGHT FIXTURE, SURFACE MOUNT
FLUORESCENT EMERGENCY LIGHT FIXTURE, RECESS MOUNT
FLUORESCENT UNDER CABINET FIXTURE
FLUORESCENT LIGHT FIXTURE, WALL MOUNT
SURFACE CEILING MOUNTED LIGHT FIXTURE
RECESSED CEILING MOUNTED LIGHT FIXTURE
EXTERIOR SURFACE MOUNT WALL–PAK
EXIT SIGN, CEILING MOUNT, ARROW INDICATES DIRECTION
EXIT SIGN, WALL MOUNT , ARROW INDICATES DIRECTION
PC — PHOTOCELL
OCCUPANCY SENSOR, LETTER DENOTES TYPE
A = INFRARED, WALL–SWITCH MOUNT
B = INFRARED, CEILING MOUNT
C = ULTRASONIC, CEILING MOUNT
D = DUAL–TECHNOLOGY, CEILING MOUNT
E = ULTRASONIC, CEILING MOUNT, CORRIDOR DISTRIBUTION
$ — SINGLE POLE SWITCH
$3 — 3–WAY SWITCH
$4 — 4–WAY SWITCH
$T — TIMER SWITCH
$ — SWITCH WITH PILOT LIGHT

COMMUNICATIONS

X X — WALL/FLOOR MOUNTED DATA OUTLET, SUBSCRIPT DENOTES NUMBER OF OUTLETS PER JUNCTION BOX (DEFAULT, ONE)
X X — WALL/FLOOR MOUNTED TELEPHONE OUTLET, SUBSCRIPT DENOTES NUMBER OF OUTLETS PER JUNCTION BOX (DEFAULT, ONE)
WALL/FLOOR MOUNTED COMBINATION DATA AND TELEPHONE OUTLET, SUBSCRIPT DENOTES NUMBER OF DATA OUTLETS PER JUNCTION BOX (DEFAULT, ONE)
TV — TELEVISION OUTLET
X — INTERCOM STATION
V = TWO–WAY AUDIO/ONE–WAY VIDEO
A = TWO–WAY AUDIO ONLY
NO = AUDIO NOTIFICATION ONLY
M = RELOCATABLE MASTER UNIT

SECURITY

CK — COMBINATION CARD READER/KEYPAD
CR — CARD READER
L — ELECTRIC DOOR LOCK
MC — MAGNETIC CONTACT
RX — REQUEST–TO–EXIT SENSOR
LA — LOCAL ALARM WITH KEY SHUTOFF
CCTV CAMERA

FIRE ALARM

P X — FIRE ALARM PULL STATION
X — PHOTOELECTRIC SMOKE DETECTOR, "I" DENOTES IONIZATION
X — DUCT SMOKE DETECTOR
X — HEAT DETECTOR, SUBSCRIPT DENOTES VARIATIONS:
R = RATE–OF–RISE, R/C = RATE COMPENSATED
X — SPRINKLER SYSTEM TAMPER SWITCH
X — SPRINKLER SYSTEM FLOW SWITCH
FIRE ALARM HORN/STROBE
FIRE ALARM STROBE
FIRE ALARM BELL
DOOR HOLD
IM — INTERFACE MODULE
PR — POLARITY REVERSAL RELAY

POWER / CONTROL

GFI = GROUND FAULT INTERRUPT
DUPLEX RECEPTACLE, WALL/FLOOR MOUNTED
DOUBLE DUPLEX RECEPTACLE, WALL/FLOOR MOUNTED
SINGLE 240 VOLT RECEPTACLE, NEMA TYPE 7
SPECIAL PURPOSE RECEPTACLE, WALL/FLOOR MOUNTED
XXX — CONTROL OR TERMINAL CABINET, TYPE AS NOTED
PANELBOARD, SURFACE/FLUSH MOUNTED
J — JUNCTION BOX
J — JUNCTION BOX, GRADE OR FLOOR MOUNTED
EQUIPMENT CONNECTION
MOTOR
M X — METER (V = VOLT, A = AMP, W = WATT, WH = WATT–HOUR)
MOTOR STARTER
COMBINATION MOTOR STARTER/DISCONNECT
NON–FUSED DISCONNECT
FUSED DISCONNECT
DISCONNECT SWITCH WITH BREAKER
$MS — MOTOR STARTING SWITCH W/ THERMAL OVERLOADS
T — THERMOSTAT
GROUND
PUSHBUTTON CONTROL
CONDUIT STUBBED & CAPPED OR BUSHED AS NOTED
RACEWAY UP
RACEWAY DOWN
UNDERGROUND OR UNDER FLOOR CIRCUIT
CIRCUIT CONCEALED / ABOVE CEILING
BRANCH CIRCUIT HOMERUN WITH GROUND, NEUTRAL AND NUMBER OF HOT WIRES
B–2 — INDICATES PANEL AND CIRCUIT NUMBER
CIRCUIT BREAKER
NORMALLY CLOSED/NORMALLY OPEN CONTACTS

SITE ELECTRICAL

UTILITY POLE, HT/CLASS AS NOTED
POLE MOUNT TRANSFORMER OR BANK AS NOTED
DOWN GUY & ANCHOR
E — PEDESTAL, E = ELECTRIC, T = TELEPHONE
POLE MOUNTED AREA LIGHT FIXTURE (DUPLEX FIXTURE SHOWN)
POLE MOUNTED STREET LIGHT LUMINAIRE
— OHE — ELECTRICAL CIRCUIT: OH = OVERHEAD, UG = UNDERGROUND, E = ELECTRIC, T = TELEPHONE, C = CATV, SG = SPAN GUY
HEADBOLT HEATER RECEPTACLE POST WITH NUMBER OF RECEPTACLES (2 SHOWN)

NOTATION

XX — REFERENCE TO SHEET NOTE
X — REFERENCE TO REVISION
WP — WEATHERPROOF
AC — ABOVE COUNTER
FACP — FIRE ALARM CONTROL PANEL
FAAP — FIRE ALARM ANNUNICATOR PANEL

STATE OF ALASKA 49TH
LUCAS SCHNELLER
EE-11399
REGISTERED PROFESSIONAL ENGINEER

Date Stamped: 4/21/09

Date	Revision	By

USKH
Architecture • Engineering
Land Surveying • Planning

2515 'A' Street
Anchorage, Alaska 99503
(907) 276–4245

544 4th Avenue, Suite 102
Fairbanks, Alaska 99701
(907) 452–2128

3031 Clinton Drive
Suite 200
Juneau, Alaska 99801
(907) 790–2901

351 W Parks Hwy, Suite 200
Wasilla, Alaska 99654
(907) 376–7815

Project:
DOMESTIC VIOLENCE SHELTER

TUNDRA WOMEN'S COALITION
P.O. BOX 2029
250 6th AVENUE
BETHEL, ALASKA 99559

Project Mgr.	JC
Drawn	LPS
Checked	GRH
Date	21 APRIL 2009

Sheet Contents:
LEGEND AND SCHEDULES

Sheet No.:
E0.1

USKH W.O. 1074400

DRAWING NAME: I:\1074400\Dwgs\E\sheets\1074400–E0_1.dwg PLOTTED: Apr 21, 2009 – 9:52am

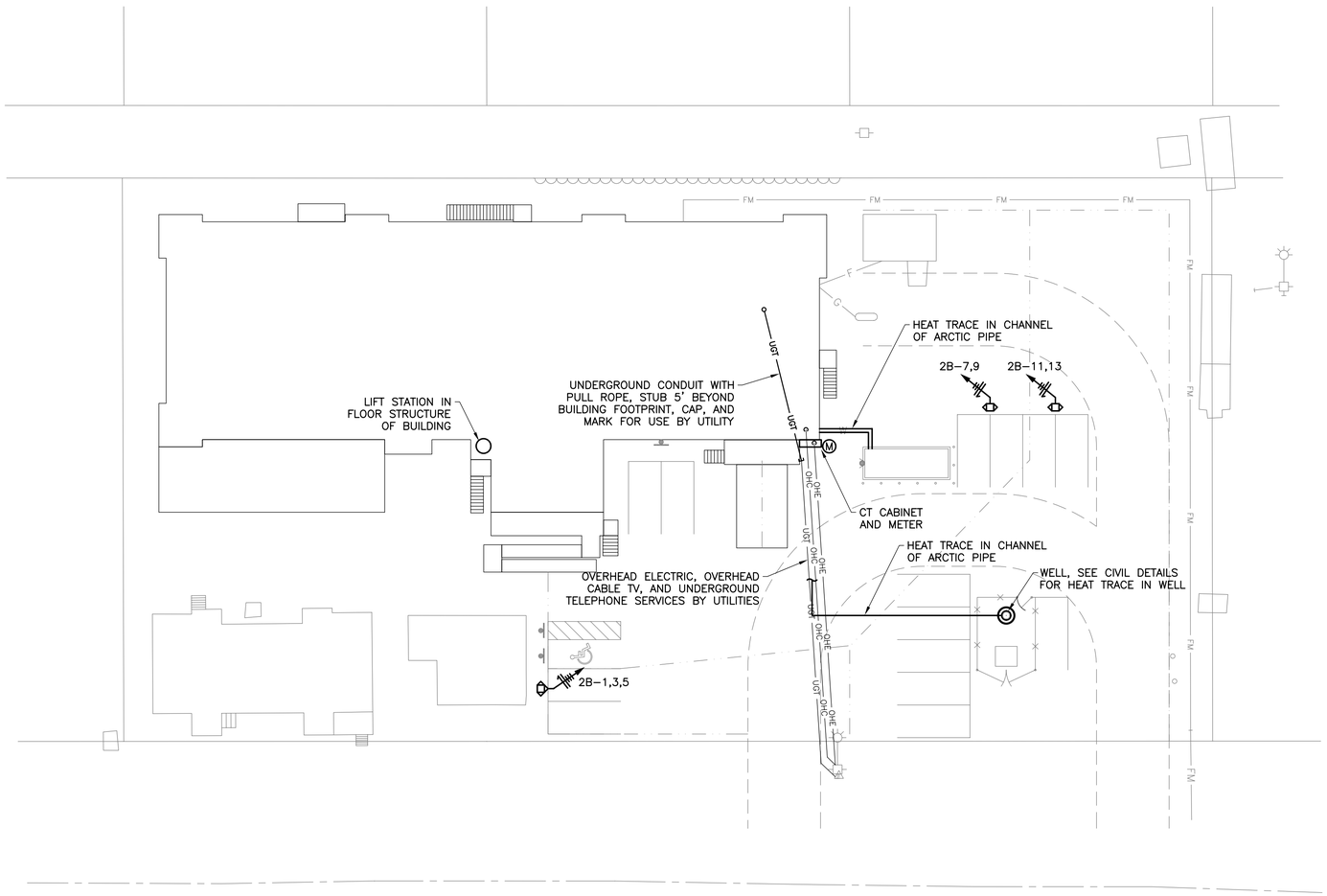

N

1
E1.1

SITE PLAN
SCALE: 1"=20'-0"

GENERAL NOTES:
1. COORDINATE SERVICE CONNECTIONS WITH SERVING UTILITIES PRIOR TO INSTALLATION.

STATE OF ALASKA
49 TH
LUCAS SCHNELLER
EE-11399
REGISTERED PROFESSIONAL ENGINEER

Date Stamped: 4/21/09

Date	Revision	By

USKH

Architecture • Engineering
Land Surveying • Planning

2515 'A' Street
Anchorage, Alaska 99503
(907) 276-4245

544 4th Avenue, Suite 102
Fairbanks, Alaska 99701
(907) 452-2128

3031 Clinton Drive
Suite 200
Juneau, Alaska 99801
(907) 790-2901

351 W Parks Hwy, Suite 200
Wasilla, Alaska 99654
(907) 376-7815

Project:
DOMESTIC VIOLENCE SHELTER

TUNDRA WOMEN'S COALITION
P.O. BOX 2029
250 6th AVENUE
BETHEL, ALASKA 99559

Project Mgr.	JC	
Drawn	LPS	
Checked	GRH	
Date	21 APRIL 2009	

Sheet Contents:
SITE PLAN

Sheet No.:
E1.1

USKH W.O. 1074400

DRAWING NAME: I:\1074400\Dwgs\E\sheets\1074400-E1_1.dwg PLOTTED: Apr 21, 2009 - 9:52am

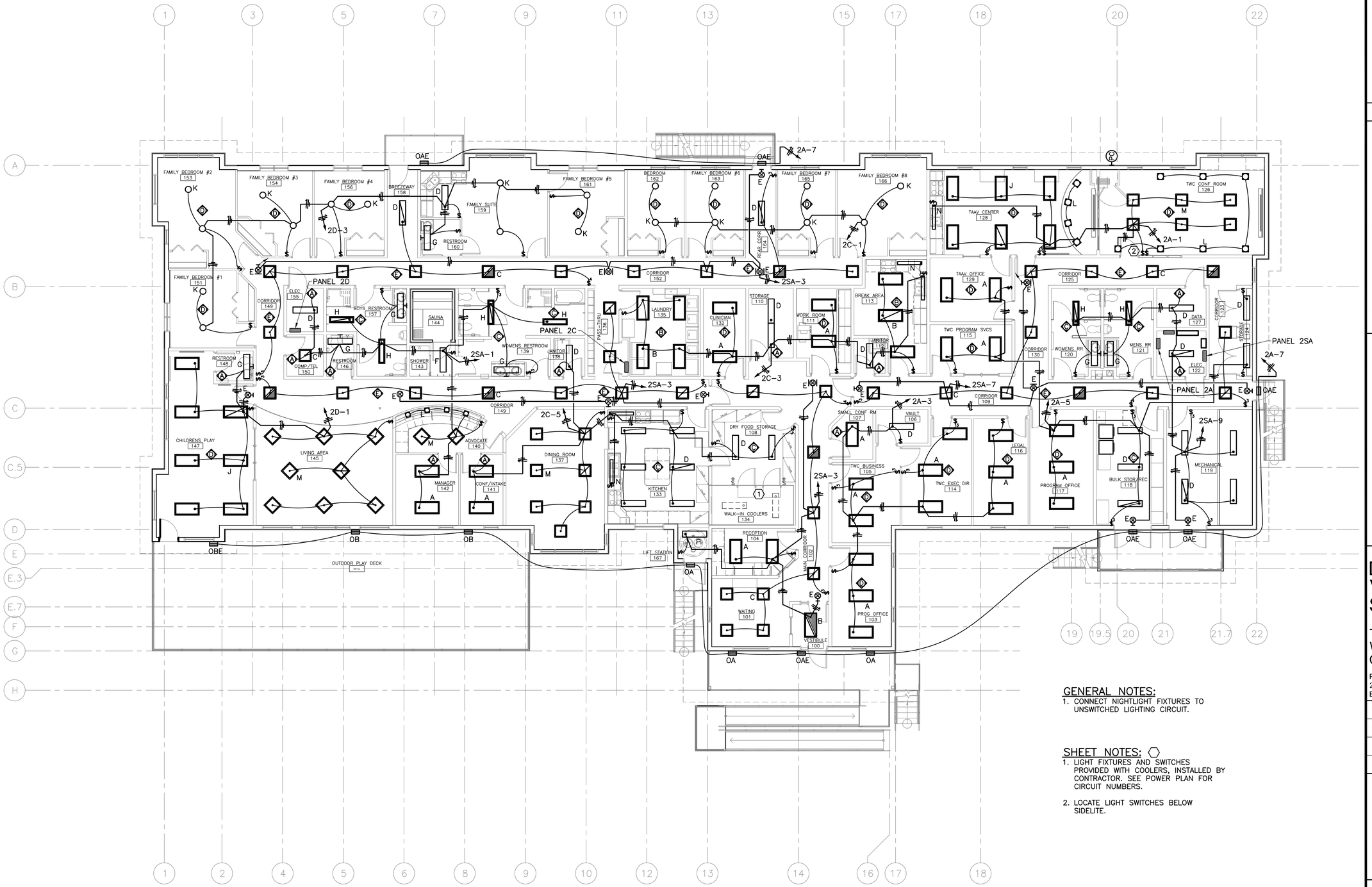

GENERAL NOTES:

1. CONNECT NIGHTLIGHT FIXTURES TO UNSWITCHED LIGHTING CIRCUIT.

SHEET NOTES: ⬡

1. LIGHT FIXTURES AND SWITCHES PROVIDED WITH COOLERS, INSTALLED BY CONTRACTOR. SEE POWER PLAN FOR CIRCUIT NUMBERS.
2. LOCATE LIGHT SWITCHES BELOW SIDELITE.

N

1 / E2.1 LIGHTING PLAN

SCALE: 1/8"=1'-0"

STATE OF ALASKA 49TH
LUCAS SCHNELLER
EE-11399
REGISTERED PROFESSIONAL ENGINEER

Date Stamped: 4/21/09

Date	Revision	By

USKH

Architecture • Engineering
Land Surveying • Planning

2515 'A' Street
Anchorage, Alaska 99503
(907) 276-4245

544 4th Avenue, Suite 102
Fairbanks, Alaska 99701
(907) 452-2128

3031 Clinton Drive
Suite 200
Juneau, Alaska 99801
(907) 790-2901

351 W Parks Hwy, Suite 200
Wasilla, Alaska 99654
(907) 376-7815

Project:

DOMESTIC VIOLENCE SHELTER

TUNDRA WOMEN'S COALITION

P.O. BOX 2029
250 6th AVENUE
BETHEL, ALASKA 99559

Project Mgr.	JC
Drawn	LPS
Checked	GRH
Date	21 APRIL 2009

Sheet Contents:

LIGHTING PLAN

Sheet No.:

E2.1

USKH W.O. 1074400

DRAWING NAME: I:\1074400\Dwgs\E\sheets\1074400-E2_1.dwg PLOTTED: Apr 21, 2009 - 9:53am

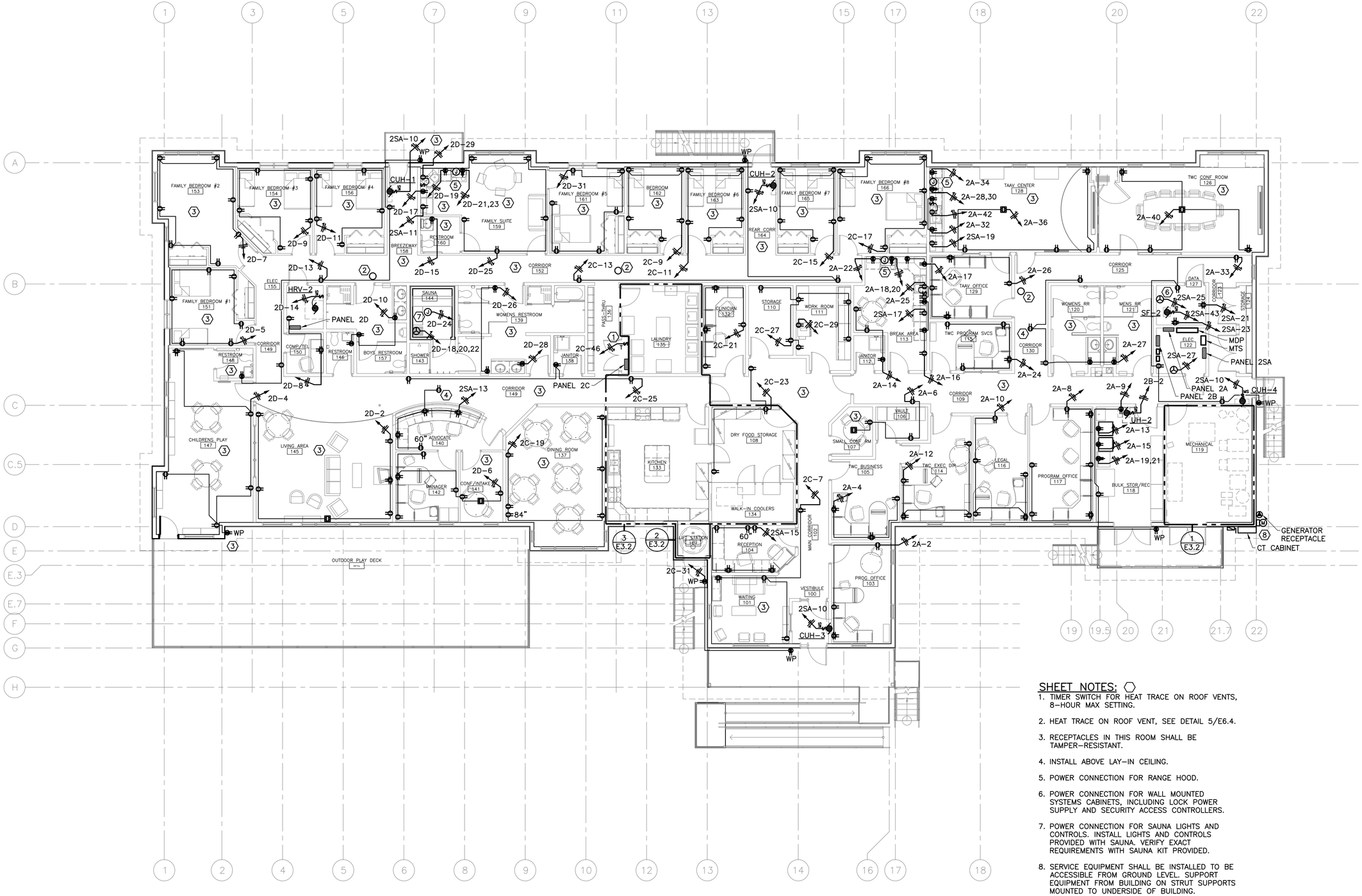

SHEET NOTES:

1. TIMER SWITCH FOR HEAT TRACE ON ROOF VENTS, 8-HOUR MAX SETTING.
2. HEAT TRACE ON ROOF VENT, SEE DETAIL 5/E6.4.
3. RECEPTACLES IN THIS ROOM SHALL BE TAMPER-RESISTANT.
4. INSTALL ABOVE LAY-IN CEILING.
5. POWER CONNECTION FOR RANGE HOOD.
6. POWER CONNECTION FOR WALL MOUNTED SYSTEMS CABINETS, INCLUDING LOCK POWER SUPPLY AND SECURITY ACCESS CONTROLLERS.
7. POWER CONNECTION FOR SAUNA LIGHTS AND CONTROLS. INSTALL LIGHTS AND CONTROLS PROVIDED WITH SAUNA. VERIFY EXACT REQUIREMENTS WITH SAUNA KIT PROVIDED.
8. SERVICE EQUIPMENT SHALL BE INSTALLED TO BE ACCESSIBLE FROM GROUND LEVEL. SUPPORT EQUIPMENT FROM BUILDING ON STRUT SUPPORTS MOUNTED TO UNDERSIDE OF BUILDING.

N

1 / E3.1 POWER PLAN

SCALE: 1/8"=1'-0"

STATE OF ALASKA 49TH LUCAS SCHNELLER EE-11399 REGISTERED PROFESSIONAL ENGINEER

Date Stamped: 4/21/09

Date	Revision	By

USKH

Architecture • Engineering

Land Surveying • Planning

2515 'A' Street
Anchorage, Alaska 99503
(907) 276-4245

544 4th Avenue, Suite 102
Fairbanks, Alaska 99701
(907) 452-2128

3031 Clinton Drive
Suite 200
Juneau, Alaska 99801
(907) 790-2901

351 W Parks Hwy, Suite 200
Wasilla, Alaska 99654
(907) 376-7815

Project:

DOMESTIC VIOLENCE SHELTER

TUNDRA WOMEN'S COALITION

P.O. BOX 2029
250 6th AVENUE
BETHEL, ALASKA 99559

Project Mgr.	JC
Drawn	LPS
Checked	GRH
Date	21 APRIL 2009

Sheet Contents:

POWER PLAN

Sheet No.:

E3.1

USKH W.O. 1074400

DRAWING NAME: I:\1074400\Dwgs\E\sheets\1074400-E3_1.dwg PLOTTED: Apr 21, 2009 - 9:53am

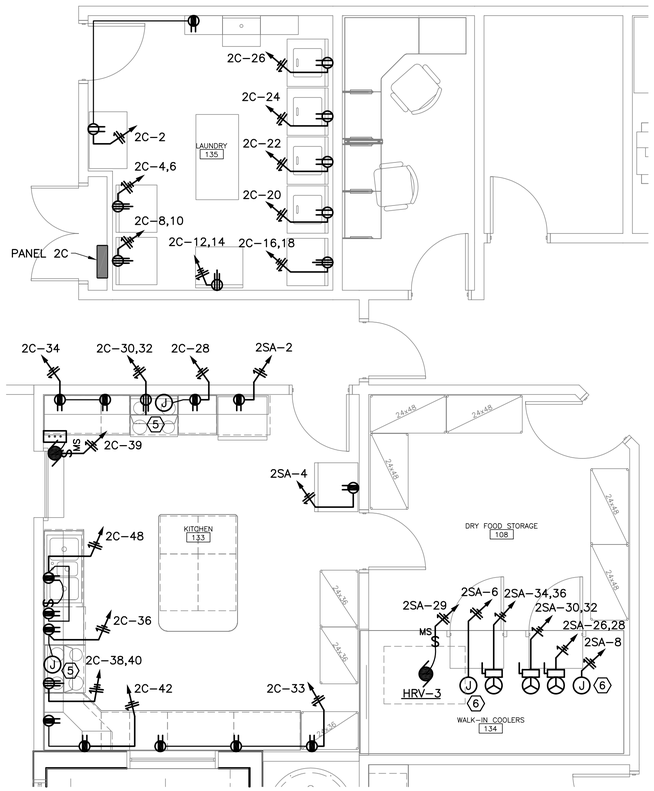

N

3 E3.2 ENLARGED POWER PLAN
KITCHEN/LAUNDRY/COOLERS
SCALE: 1/4"=1'-0"

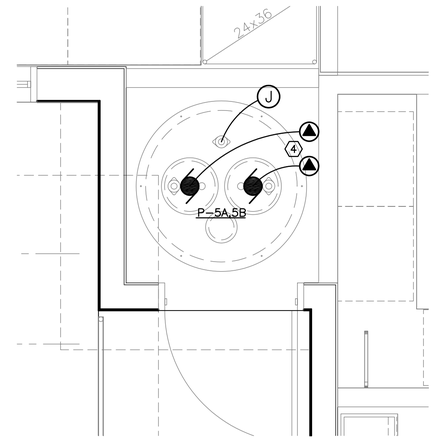

N

2 E3.2 ENLARGED POWER PLAN
LIFT STATION 167
SCALE: 1/4"=1'-0"

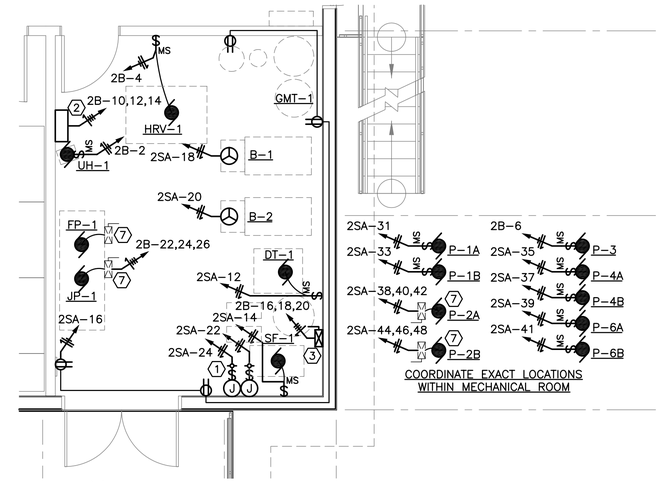

N

1 E3.2 ENLARGED POWER PLAN
MECHANICAL 119
SCALE: 1/4"=1'-0"

SHEET NOTES:

1. PILOT LIGHT SWITCHES AND POWER CONNECTIONS FOR HEAT TRACE ON WATER LINES. VERIFY CONNECTION LOCATIONS.
2. LIFT STATION CONTROL PANEL. COORDINATE EXACT LOCATION WITH MECHANICAL. INSTALL POWER AND CONTROL CABLES TO LIFT STATION. SEE DETAIL 3/E6.4.
3. WELL PUMP CONTROLLER. CONNECT TO PRESSURE SWITCH FOR CONTROL.
4. RECEPTACLES FOR PUMP CONNECTIONS, SEE DETAIL 3/E6.4.
5. POWER CONNECTION FOR RANGE HOOD.
6. POWER CONNECTION FOR EVAPORATOR FAN (COOLER ONLY), LIGHTS, AND DOOR HEATER.
7. STARTER OR VFD SUPPLIED WITH PUMP.

STATE OF ALASKA 49TH
LUCAS SCHNELLER
EE-11399
REGISTERED PROFESSIONAL ENGINEER

Date Stamped: 4/21/09

Date	Revision	By

USKH
Architecture • Engineering
Land Surveying • Planning

2515 'A' Street
Anchorage, Alaska 99503
(907) 276-4245

544 4th Avenue, Suite 102
Fairbanks, Alaska 99701
(907) 452-2128

3031 Clinton Drive
Suite 200
Juneau, Alaska 99801
(907) 790-2901

351 W Parks Hwy, Suite 200
Wasilla, Alaska 99654
(907) 376-7815

Project:
DOMESTIC VIOLENCE SHELTER

TUNDRA WOMEN'S COALITION
P.O. BOX 2029
250 6th AVENUE
BETHEL, ALASKA 99559

Project Mgr.	JC	
Drawn	LPS	
Checked	GRH	
Date	21 APRIL 2009	

Sheet Contents:
ENLARGED POWER PLANS

Sheet No.:
E3.2

USKH W.O. 1074400

DRAWING NAME: I:\1074400\Dwgs\E\sheets\1074400-E3_2.dwg PLOTTED: Apr 21, 2009 - 9:53am

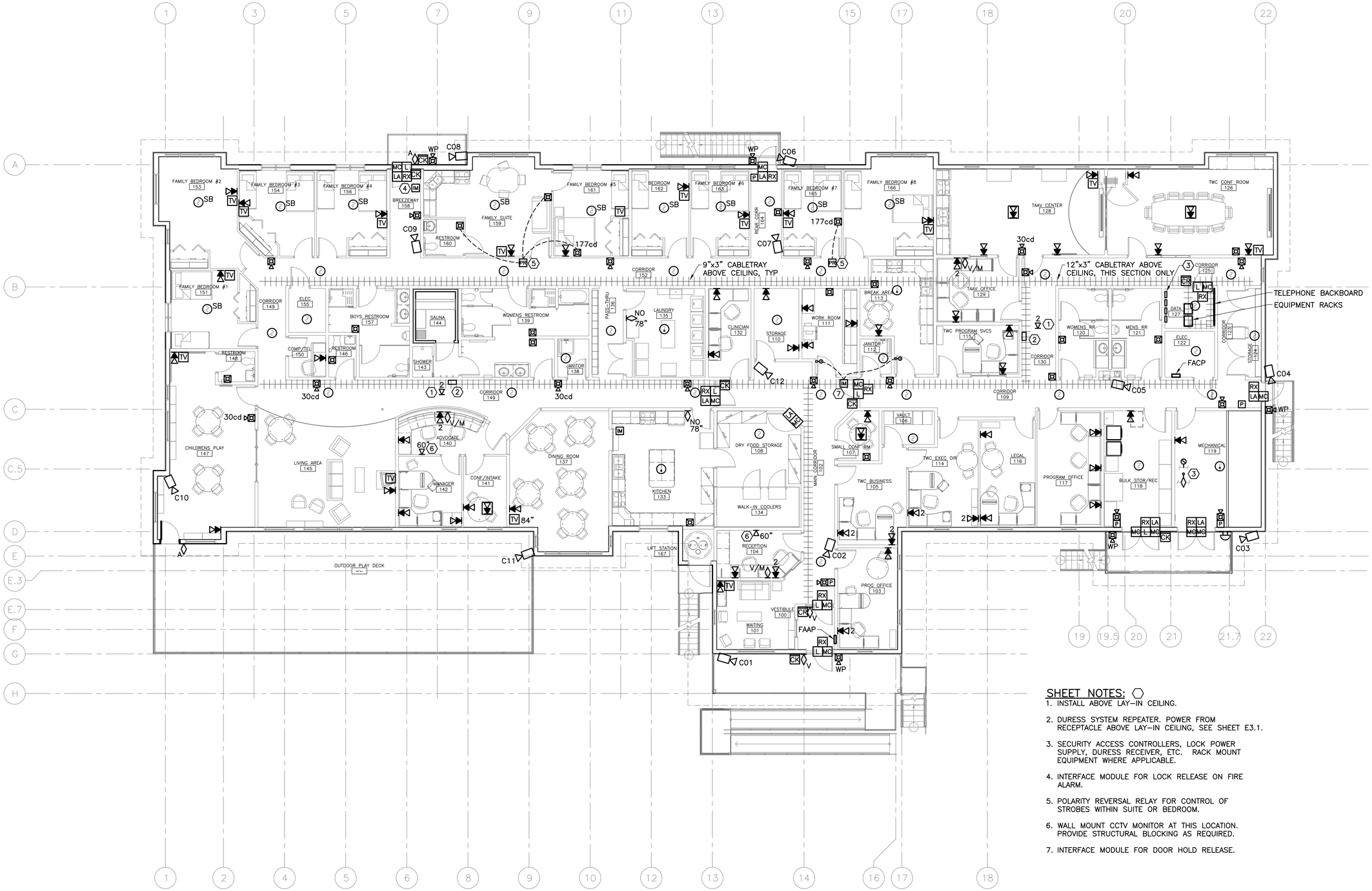

SHEET NOTES:

1. INSTALL ABOVE LAY–IN CEILING.
2. DURESS SYSTEM REPEATER. POWER FROM RECEPTACLE ABOVE LAY–IN CEILING, SEE SHEET E3.1.
3. SECURITY ACCESS CONTROLLERS, LOCK POWER SUPPLY, DURESS RECEIVER, ETC. RACK MOUNT EQUIPMENT WHERE APPLICABLE.
4. INTERFACE MODULE FOR LOCK RELEASE ON FIRE ALARM.
5. POLARITY REVERSAL RELAY FOR CONTROL OF STROBES WITHIN SUITE OR BEDROOM.
6. WALL MOUNT CCTV MONITOR AT THIS LOCATION. PROVIDE STRUCTURAL BLOCKING AS REQUIRED.
7. INTERFACE MODULE FOR DOOR HOLD RELEASE.

N

1 / E4.1 SYSTEMS PLAN

SCALE: 1/8"=1'–0"

STATE OF ALASKA 49TH LUCAS SCHNELLER EE-11399 REGISTERED PROFESSIONAL ENGINEER

Date Stamped: 4/21/09

Date	Revision	By

USKH
Architecture • Engineering
Land Surveying • Planning

2515 'A' Street
Anchorage, Alaska 99503
(907) 276–4245

544 4th Avenue, Suite 102
Fairbanks, Alaska 99701
(907) 452–2128

3031 Clinton Drive
Suite 200
Juneau, Alaska 99801
(907) 790–2901

351 W Parks Hwy, Suite 200
Wasilla, Alaska 99654
(907) 376–7815

Project:

DOMESTIC VIOLENCE SHELTER

TUNDRA WOMEN'S COALITION

P.O. BOX 2029
250 6th AVENUE
BETHEL, ALASKA 99559

Project Mgr.	JC	
Drawn	LPS	
Checked	GRH	
Date	21 APRIL 2009	

Sheet Contents:

SYSTEMS PLAN

Sheet No.:

E4.1

USKH W.O. 1074400

DRAWING NAME: I:\1074400\Dwgs\E\sheets\1074400-E4_1.dwg PLOTTED: Apr 21, 2009 – 9:54am

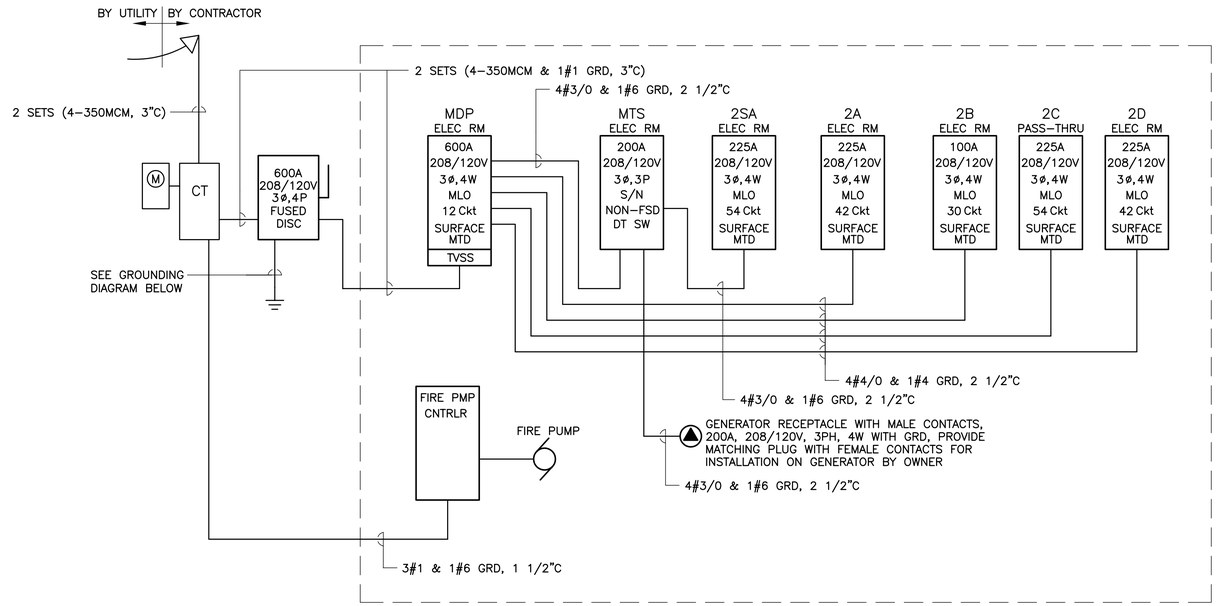

1 E5.1 RISER DIAGRAM

SCALE: NONE

PANEL DESIGNATION LEGEND

X X XX X

- PANEL DESIGNATION
- (BLANK) = BRANCH PANEL
  DP = DISTRIBUTION PANEL
- (BLANK) = NORMAL
  S = STANDBY
  E = EMERGENCY
- M = MAIN (480V)
  G = GENERATOR (480V)
  4 = 480V
  2 = 208V

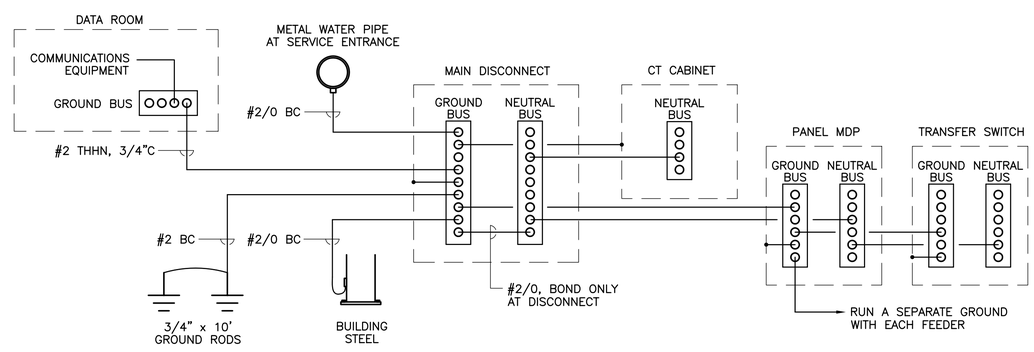

2 E5.1 GROUNDING DIAGRAM

SCALE: NONE

STATE OF ALASKA
49 TH
LUCAS SCHNELLER
EE-11399
REGISTERED PROFESSIONAL ENGINEER

Date Stamped: 4/21/09

Date	Revision	By

USKH
Architecture • Engineering
Land Surveying • Planning

2515 'A' Street
Anchorage, Alaska 99503
(907) 276–4245

544 4th Avenue, Suite 102
Fairbanks, Alaska 99701
(907) 452–2128

3031 Clinton Drive
Suite 200
Juneau, Alaska 99801
(907) 790–2901

351 W Parks Hwy, Suite 200
Wasilla, Alaska 99654
(907) 376–7815

Project:

DOMESTIC VIOLENCE SHELTER

TUNDRA WOMEN'S COALITION

P.O. BOX 2029
250 6th AVENUE
BETHEL, ALASKA 99559

Project Mgr.	JC	
Drawn	LPS	
Checked	GRH	
Date	21 APRIL 2009	

Sheet Contents:

RISER DIAGRAMS

Sheet No.:

E5.1

USKH W.O. 1074400

DRAWING NAME: I:\1074400\Dwgs\E\sheets\1074400–E5_1.dwg PLOTTED: Apr 21, 2009 – 9:54am

PANEL MDP

CKT	LOAD	BRANCH BKR	BRANCH VA	CONNECTED KVA A	CONNECTED KVA B	CONNECTED KVA C	BRANCH VA	BRANCH BKR	LOAD	CKT
			14,841	22.3			7,422			
1	PANEL 2A	225/3	14,402		21.6		7,230	100/3	PANEL 2B	2
			14,689			21.8	7,086			
			20,808	32.7			11,856			
3	PANEL 2C	225/3	20,552		32.8		12,262	225/3	PANEL 2D	4
			20,912			33.2	12,280			
	MTS SERVING		12,903	12.9						
5	PANEL 2SA	200/3	11,541		11.5					6
			12,552			12.6				
				0.0						
7					0.0					8
						0.0				
				0.0						
9					0.0					10
						0.0				
				0.0						
11					0.0				BUS MOUNTED TVSS	12
						0.0				
	CONNECTED LOAD	**201.3** KVA		67.8	66.0	67.5				
		559 AMPS		565	550	563				
	NEC DEMAND	**158.3** KVA								
		440 AMPS								

PANEL NOTES

PANEL SPECIFICATIONS

MAINS RATING AMPS – 600
MAIN CIRCUIT BREAKER AMPERES – MLO
CAPACITY THREE–POLE CIRCUITS – 12
SYSTEM VOLTAGE – 208Y/120
PHASE, NO. OF WIRES – 3 PH, 4 W
AIC RATING – 22,000
MOUNTING – SURFACE
LOCATION – ELEC 122

PANEL 2SA

CKT	LOAD	BRANCH BKR	BRANCH VA	CONNECTED KVA A	CONNECTED KVA B	CONNECTED KVA C	BRANCH VA	BRANCH BKR	LOAD	CKT
1	CENTRAL CORE WEST–LTS	20/1	1074	2.1			1000	20/1	133–REFRIG	2
3	WEST CORR–LTS	20/1	1395		2.4		1000	20/1	133–REFRIG	4
5	CENTER CORR, RECPT–LTS	20/1	848			1.8	1000	20/1	134–COOLER	6
7	EAST CORR–LTS	20/1	804	1.3			500	20/1	134–FREEZER	8
9	RESTRM,MECH,ELEC–LTS	20/1	610		1.2		624	20/1	CUH–1,2,3,4	10
11	159–REFRIG	20/1	1000			2.7	1728	20/1	DT–1	12
13	140–RECPTS	20/1	1260	1.6			350	20/1	SF–1	14
15	104–RECPTS	20/1	1260		2.0		720	20/1	119–RECPTS	16
17	113–REFRIG	20/1	1000			2.2	1176	20/1	B–1	18
19	128–REFRIG	20/1	1000	2.2			1176	20/1	B–2	20
21	127–TELECOM RECPTS	20/1	360		1.0		600	20/1–E	FIRE WATER LINE HEAT RACE	22
23	127–TELECOM RECPTS	20/1	360			1.4	1000	30/1–E	WELL/WATER LINE HEAT RACE	24
25	127–SYSTEM PANELS	20/1	600	2.6			2028	25/2	FREEZER CONDENSER	26
27	122–FIRE ALARM CONTROL PANEL	20/1	1000		3.0		2028			28
29	HRV–3	20/1	1320			2.5	1176	20/2	FREEZER EVAPORATOR	30
31	P–1A	20/1	864	2.0			1176			32
33	P–1B (STANDBY)	20/1			1.0		960	15/2	COOLER CONDENSER	34
35	P–4A	20/1	156			1.1	960			36
37	P–4B (STANDBY)	20/1		0.8			828			38
39	P–6A	20/1	156		1.0		828	15/3	P–2A	40
41	P–6B (STANDBY)	20/1				0.8	828			42
43	SF–2	20/1	243	0.2						44
45					0.0			15/3	P–2B (STANDBY)	46
47						0.0				48
49				0.0						50
51					0.0					52
53						0.0				54
	CONNECTED LOAD	**37.0** KVA		12.9	11.5	12.6				
		103 AMPS		108	96	105				
	NEC DEMAND	**39.2** KVA								
		109 AMPS								

PANEL NOTES
–E = EPD CIRCUIT BREAKER WITH HANDLE PADLOCKING PROVISION

PANEL SPECIFICATIONS

MAINS RATING AMPS – 225
MAIN CIRCUIT BREAKER AMPERES – MLO
CAPACITY ONE–POLE CIRCUITS – 54
SYSTEM VOLTAGE – 208Y/120
PHASE, NO. OF WIRES – 3 PH, 4 W
AIC RATING – 10,000
MOUNTING – SURFACE
LOCATION – ELEC 122

STATE OF ALASKA 49TH
LUCAS SCHNELLER
EE-11399
REGISTERED PROFESSIONAL ENGINEER

Date Stamped: *4/21/09*

Date	Revision	By

USKH
Architecture • Engineering
Land Surveying • Planning

2515 'A' Street
Anchorage, Alaska 99503
(907) 276–4245

544 4th Avenue, Suite 102
Fairbanks, Alaska 99701
(907) 452–2128

3031 Clinton Drive
Suite 200
Juneau, Alaska 99801
(907) 790–2901

351 W Parks Hwy, Suite 200
Wasilla, Alaska 99654
(907) 376–7815

Project:
DOMESTIC VIOLENCE SHELTER

TUNDRA WOMEN'S COALITION
P.O. BOX 2029
250 6th AVENUE
BETHEL, ALASKA 99559

Project Mgr.	JC	
Drawn	LPS	
Checked	GRH	
Date	21 APRIL 2009	

Sheet Contents:
PANEL SCHEDULES

Sheet No.:
E5.2

USKH W.O. 1074400

DRAWING NAME: I:\1074400\Dwgs\E\sheets\1074400–E5_2.dwg PLOTTED: Apr 21, 2009 – 9:54am

PANEL 2B

CKT	LOAD	BRANCH BKR	BRANCH VA	CONNECTED KVA A	B	C	BRANCH VA	BRANCH BKR	LOAD	CKT
1	HBH RECPT		1200	1.5			312	20/1	UH-1, UH-2	2
3	HBH RECPT	20/3	1200		2.5		1320	20/1	HRV-1	4
5	HBH RECPT		1200			2.4	1176	20/1	P-3	6
7	HBH RECPT	20/2	1200	1.2						8
9	HBH RECPT		1200		3.3		2106			10
11	HBH RECPT	20/2	1200			3.3	2106	20/3	LIFT STATION	12
13	HBH RECPT		1200	3.3			2106			14
15					0.6		576			16
17						0.6	576	15/3	WELL PUMP	18
19				0.6			576			20
21					0.8		828			22
23						0.8	828	15/3	JOCKEY PUMP	24
25				0.8			828			26
27					0.0					28
29						0.0				30
	CONNECTED LOAD	**21.7** KVA		7.4	7.2	7.1				
		60 AMPS		62	60	59				
	NEC DEMAND	**21.2** KVA								
		59 AMPS								

PANEL NOTES

PANEL SPECIFICATIONS
MAINS RATING AMPS – 100
MAIN CIRCUIT BREAKER AMPERES – MLO
CAPACITY ONE-POLE CIRCUITS – 30
SYSTEM VOLTAGE – 208Y/120
PHASE, NO. OF WIRES – 3 PH, 4 W
AIC RATING – 10,000
MOUNTING – SURFACE
LOCATION – ELEC 122

PANEL 2A

CKT	LOAD	BRANCH BKR	BRANCH VA	CONNECTED KVA A	B	C	BRANCH VA	BRANCH BKR	LOAD	CKT
1	CONF,TAAV-LTS	20/1	1184	1.9			720	20/1	103-RECPTS	2
3	SOUTH OFFICES-LTS	20/1	1165		2.1		900	20/1	105-RECPTS	4
5	CENTER, SW OFFICES-LTS	20/1	949			1.7	720	20/1	106,107,CORR-RECPTS	6
7	EXTERIOR-LTS	20/1	1056	2.5			1440	20/1	117-RECPTS	8
9	118,EXT-RECPTS	20/1	540		1.6		1080	20/1	116-RECPTS	10
11						0.9	900	20/1	114-RECPTS	12
13	118-WASHER	20/1	900	1.4			540	20/1	112,113-RECPTS	14
15	118-WASHER	20/1	900		1.4		540	20/1	113-RECPTS	16
17	113-RECPTS	20/1	360			5.2	4800	50/2	113-RANGE	18
19	119-DRYER	20/2	697	5.5			4800			20
21			697		1.1		360	20/1	113-RECPTS/HOOD	22
23						0.9	900	20/1	115-RECPTS	24
25	113-DISHWASHER/DISPOSER	20/1	2064	3.1			1080	20/1	129-RECPTS	26
27	120,121,CORR-RECPTS	20/1	900		5.7		4800	50/2	128-RANGE	28
29						4.8	4800			30
31				0.4			360	20/1	128-RECPTS	32
33	122,127,CORR,EXT-RECPTS	20/1	900		1.3		360	20/1	128-RECPTS/HOOD	34
35						1.1	1080	20/1	128-RECPTS	36
37				0.0						38
39					1.3		1260	20/1	126-RECPTS	40
41						0.2	180	20/1	128-DISPOSER	42
	CONNECTED LOAD	**43.9** KVA		14.8	14.4	14.7				
		122 AMPS		124	120	122				
	NEC DEMAND	**34.5** KVA								
		96 AMPS								

PANEL NOTES

PANEL SPECIFICATIONS
MAINS RATING AMPS – 225
MAIN CIRCUIT BREAKER AMPERES – MLO
CAPACITY ONE-POLE CIRCUITS – 42
SYSTEM VOLTAGE – 208Y/120
PHASE, NO. OF WIRES – 3 PH, 4 W
AIC RATING – 10,000
MOUNTING – SURFACE
LOCATION – ELEC 122

PANEL 2D

CKT	LOAD	BRANCH BKR	BRANCH VA	CONNECTED KVA A	B	C	BRANCH VA	BRANCH BKR	LOAD	CKT
1	145,147-LTS	20/1	1036	2.3			1260	20/1	145-RECPTS	2
3	NW BEDS-LTS	20/1-A	902		2.2		1260	20/1	147,EXT-RECPTS	4
5	151-RECPTS	20/1-A	1080			2.5	1440	20/1	141,142-RECPTS	6
7	153-RECPTS	20/1-A	1260	1.8			540	20/1	150,155-RECPTS	8
9	154-RECPTS	20/1-A	900		1.4		540	20/1	146,157-RECPTS	10
11	156-RECPTS	20/1-A	900			0.9				12
13	CORR,EXT-RECPTS	20/1-A	900	1.6			660	20/1	HRV-2	14
15	160-RECPTS	20/1	180		0.2					16
17	159-RECPTS	20/1	180			3.7	3500			18
19	159-RECPTS/HOOD	20/1	360	3.9			3500	40/3	SAUNA HEATER	20
21	159-RANGE	50/2	4800		8.3		3500			22
23			4800			5.0	200	20/1	SAUNA LTS/CONTROLS	24
25	159-RECPTS	20/1-A	900	1.3			360	20/1	139-RECPTS	26
27					0.2		180	20/1	139-RECPTS	28
29	159-DISPOSER	20/1	180			0.2				30
31	161-RECPTS	20/1-A	1080	1.1						32
33					0.0					34
35						0.0				36
37				0.0						38
39					0.0					40
41						0.0				42
	CONNECTED LOAD	**36.4** KVA		11.9	12.3	12.3				
		101 AMPS		99	102	102				
	NEC DEMAND	**33.8** KVA								
		94 AMPS								

PANEL NOTES
-A = AFCI CIRCUIT BREAKER

PANEL SPECIFICATIONS
MAINS RATING AMPS – 225
MAIN CIRCUIT BREAKER AMPERES – MLO
CAPACITY ONE-POLE CIRCUITS – 42
SYSTEM VOLTAGE – 208Y/120
PHASE, NO. OF WIRES – 3 PH, 4 W
AIC RATING – 10,000
MOUNTING – SURFACE
LOCATION – ELEC 155

PANEL 2C

CKT	LOAD	BRANCH BKR	BRANCH VA	CONNECTED KVA A	B	C	BRANCH VA	BRANCH BKR	LOAD	CKT
1	NORTH BEDS-LTS	20/1-A	520	0.9			360	20/1	135-RECPTS	2
3	CENTRAL CORE-LTS	20/1	1040		3.5		2500	30/2	135-DRYER	4
5	KITCHEN,DINING-LTS	20/1	1264			3.8	2500			6
7	101,CORR-RECPTS	20/1	900	3.4			2500	30/2	135-DRYER	8
9	162-RECPTS	20/1-A	900		3.4		2500			10
11	163-RECPTS	20/1-A	900			3.4	2500	30/2	135-DRYER	12
13	CORR,EXT-RECPTS	20/1-A	720	3.2			2500			14
15	165-RECPTS	20/1-A	900		3.4		2500	30/2	135-DRYER	16
17	166-RECPTS	20/1-A	1260			3.8	2500			18
19	137-RECPTS	20/1	1080	1.9			864	20/1	135-WASHER	20
21	132-RECPTS	20/1	1080		1.9		864	20/1	135-WASHER	22
23	108,CORR-REPCTS	20/1	540			1.4	864	20/1	135-WASHER	24
25	138,CORR-RECPTS	20/1	540	1.4			864	20/1	135-WASHER	26
27	110,111-RECPTS	20/1	1080		1.4		360	20/1	133-RECPTS/HOOD	28
29	111-COPIER	20/1	1000			5.8	4800	50/2	133-RANGE	30
31	EXT-RECPTS	20/1	360	5.2			4800			32
33	133-RECPTS	20/1	540		0.9		360	20/1	133-RECPTS	34
35						0.4	360	20/1	133-RECPTS/HOOD	36
37				4.8			4800	50/2	133-RANGE	38
39	133-COILING DOOR	20/1	528		5.3		4800			40
41						0.4	360	20/1	133-RECPTS	42
43				0.0						44
45					0.6		600	20/1-E	ROOF VENT HEAT TRACE	46
47						2.1	2064	20/1	133-DISHWASHER/DISPOSER	48
49				0.0						50
51					0.0					52
53						0.0				54
	CONNECTED LOAD	**62.3** KVA		20.8	20.6	20.9				
		173 AMPS		173	171	174				
	NEC DEMAND	**53.6** KVA								
		149 AMPS								

PANEL NOTES
-A = AFCI CIRCUIT BREAKER
-E = EPD CIRCUIT BREAKER WITH HANDLE PADLOCKING PROVISION

PANEL SPECIFICATIONS
MAINS RATING AMPS – 225
MAIN CIRCUIT BREAKER AMPERES – MLO
CAPACITY ONE-POLE CIRCUITS – 54
SYSTEM VOLTAGE – 208Y/120
PHASE, NO. OF WIRES – 3 PH, 4 W
AIC RATING – 10,000
MOUNTING – SURFACE
LOCATION – PASS-THRU 136

STATE OF ALASKA 49TH
LUCAS SCHNELLER
EE-11399
REGISTERED PROFESSIONAL ENGINEER

Date Stamped: *4/21/09*

Date	Revision	By

USKH
Architecture • Engineering
Land Surveying • Planning

2515 'A' Street
Anchorage, Alaska 99503
(907) 276-4245

544 4th Avenue, Suite 102
Fairbanks, Alaska 99701
(907) 452-2128

3031 Clinton Drive
Suite 200
Juneau, Alaska 99801
(907) 790-2901

351 W Parks Hwy, Suite 200
Wasilla, Alaska 99654
(907) 376-7815

Project:
DOMESTIC VIOLENCE SHELTER

TUNDRA WOMEN'S COALITION
P.O. BOX 2029
250 6th AVENUE
BETHEL, ALASKA 99559

Project Mgr.	JC
Drawn	LPS
Checked	GRH
Date	21 APRIL 2009

Sheet Contents:
PANEL SCHEDULES

Sheet No.:
E5.3

USKH W.O. 1074400

DRAWING NAME: I:\1074400\Dwgs\E\sheets\1074400-E5_3.dwg PLOTTED: Apr 21, 2009 - 9:54am

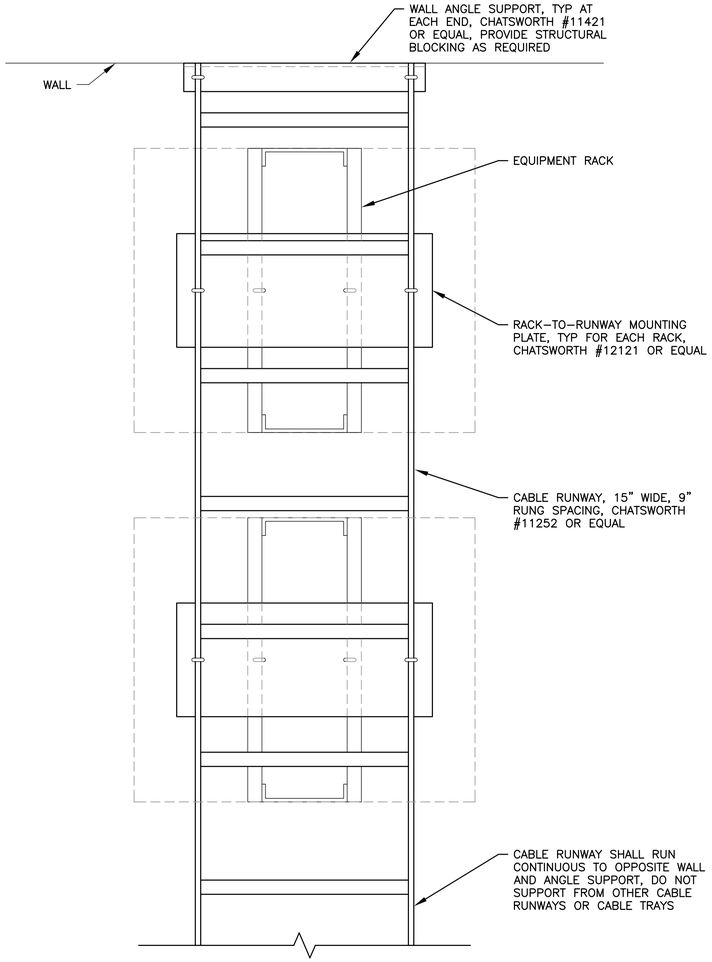

2 / E6.1 EQUIPMENT RACK SUPPORT DETAIL

SCALE: NONE

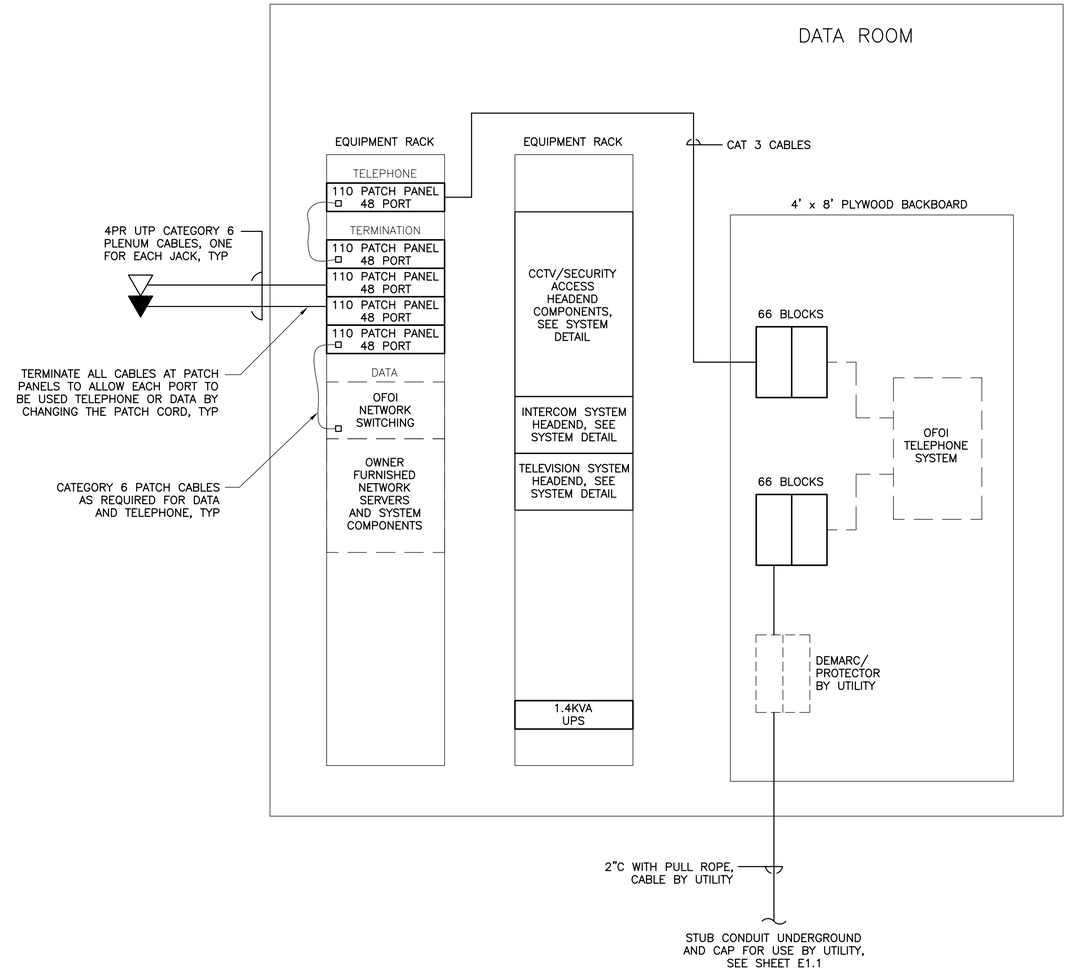

1 / E6.1 TELECOMMUNICATIONS RISER DIAGRAM

SCALE: NONE

STATE OF ALASKA 49TH
LUCAS SCHNELLER EE-11399
REGISTERED PROFESSIONAL ENGINEER

Date Stamped: 4/21/09

Date	Revision	By

USKH

Architecture • Engineering
Land Surveying • Planning

2515 'A' Street
Anchorage, Alaska 99503
(907) 276-4245

544 4th Avenue, Suite 102
Fairbanks, Alaska 99701
(907) 452-2128

3031 Clinton Drive
Suite 200
Juneau, Alaska 99801
(907) 790-2901

351 W Parks Hwy, Suite 200
Wasilla, Alaska 99654
(907) 376-7815

Project:
DOMESTIC VIOLENCE SHELTER

TUNDRA WOMEN'S COALITION
P.O. BOX 2029
250 6th AVENUE
BETHEL, ALASKA 99559

Project Mgr.	JC	
Drawn	LPS	
Checked	GRH	
Date	21 APRIL 2009	

Sheet Contents:
DETAILS

Sheet No.:
E6.1

USKH W.O. 1074400

DRAWING NAME: I:\1074400\Dwgs\E\sheets\1074400-E6_1.dwg PLOTTED: Apr 21, 2009 - 9:54am

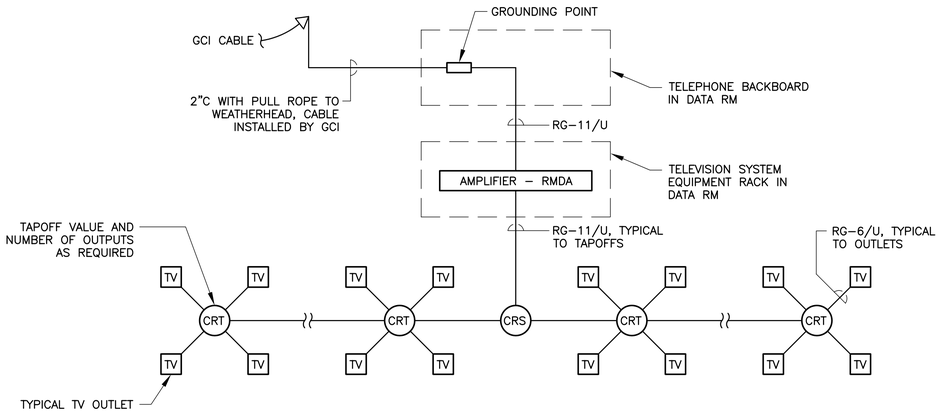

2 / E6.2 TELEVISION SYSTEM RISER DIAGRAM

SCALE: NONE

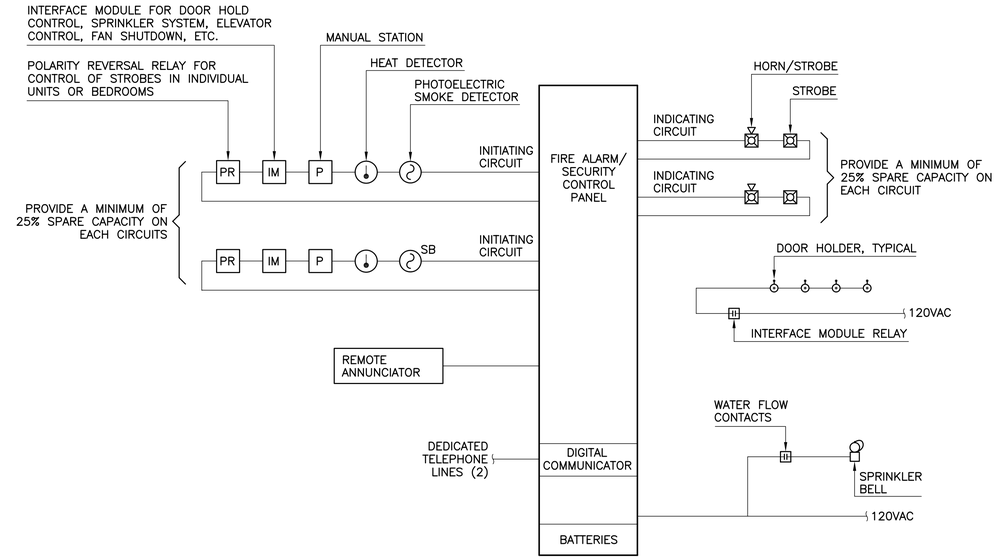

SYSTEM OPERATION:
ACTIVATION OF SMOKE DETECTOR WITH SOUNDER BASE SHALL INITIATE LOCAL ALARM AND TROUBLE SIGNAL AT FIRE ALARM PANEL AND ANNUNCIATOR

ACTIVATION OF ANY OTHER DEVICE OR TWO OR MORE SMOKE DETECTORS WITH SOUNDER BASES SHALL INITIATE SYSTEM GENERAL ALARM, ON GENERAL ALARM, ALL INDICATING DEVICES ARE ACTIVATED, DOOR HOLDS ARE RELEASED, AND CONTROLLED LOCKS ARE UNLOCKED

1 / E6.2 FIRE ALARM RISER DIAGRAM

SCALE: NONE

SECURITY ACCESS SCHEDULE

DOOR	SECURITY DEVICES							NOTES
	CARD READER	CARD RDR/ KEYPAD	ELECTRIC LOCK	MAGNETIC CONTACT	LOCAL ALARM	ALARM TIME DELAY	REQUEST TO EXIT	
100A		X	X	X			X	
100B	X		X	X			X	
108A				X	X	30 SEC		
109A				X	X	0 SEC	X	
109B		X	X	X			X	
118A–L				X	X	30 SEC	X	2
118A–R		X	X	X	X	30 SEC	X	
119A–L				X	X	30 SEC	X	2
119A–R				X	X	30 SEC	X	
127A	X		X	X			X	
131A		X	X	X	X	30 SEC	X	
158A		X (TYP OF 2)	X	X	X	30 SEC	X	1
164A				X	X	0 SEC	X	

ACCESS CONTROL SCHEDULE NOTES:

1. REQUEST TO EXIT SENSOR NOT USED AT THIS TIME. INSTALL SENSOR AND CABLING, BUT DISABLE IN SYSTEM.
2. REQUEST TO EXIT AND LOCAL ALARM SHARED WITH ASSOCIATED RIGHT HAND DOOR.

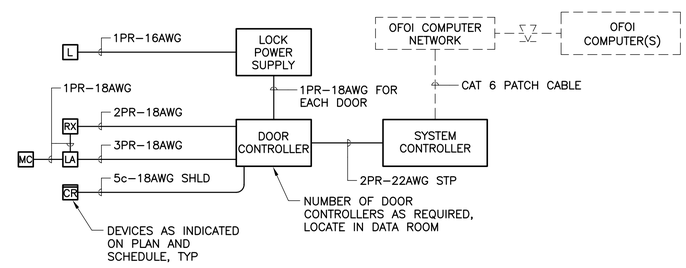

3 / E6.2 SECURITY ACCESS RISER DIAGRAM

SCALE: NONE

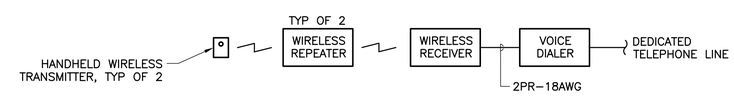

4 / E6.2 DURESS SYSTEM RISER DIAGRAM

SCALE: NONE

STATE OF ALASKA 49TH LUCAS SCHNELLER EE-11399 REGISTERED PROFESSIONAL ENGINEER

Date Stamped: 4/21/09

Date	Revision	By

USKH
Architecture • Engineering
Land Surveying • Planning

2515 'A' Street
Anchorage, Alaska 99503
(907) 276–4245

544 4th Avenue, Suite 102
Fairbanks, Alaska 99701
(907) 452–2128

3031 Clinton Drive
Suite 200
Juneau, Alaska 99801
(907) 790–2901

351 W Parks Hwy, Suite 200
Wasilla, Alaska 99654
(907) 376–7815

Project:
DOMESTIC VIOLENCE SHELTER

TUNDRA WOMEN'S COALITION
P.O. BOX 2029
250 6th AVENUE
BETHEL, ALASKA 99559

Project Mgr.	JC
Drawn	LPS
Checked	GRH
Date	21 APRIL 2009

Sheet Contents:
DETAILS

Sheet No.:
E6.2

USKH W.O. 1074400

DRAWING NAME: I:\1074400\Dwgs\E\sheets\1074400-E6_2.dwg PLOTTED: Apr 21, 2009 - 9:54am

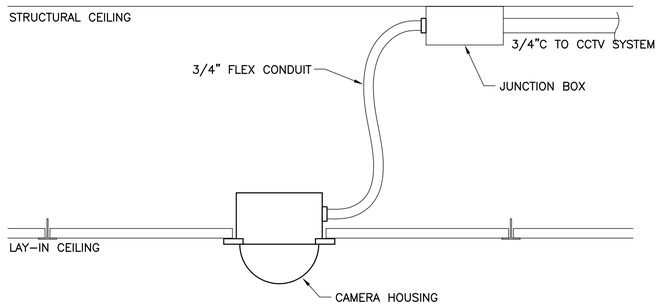

3 E6.3 CAMERA DETAIL – INTERIOR, CEILING MOUNT
SCALE: NONE

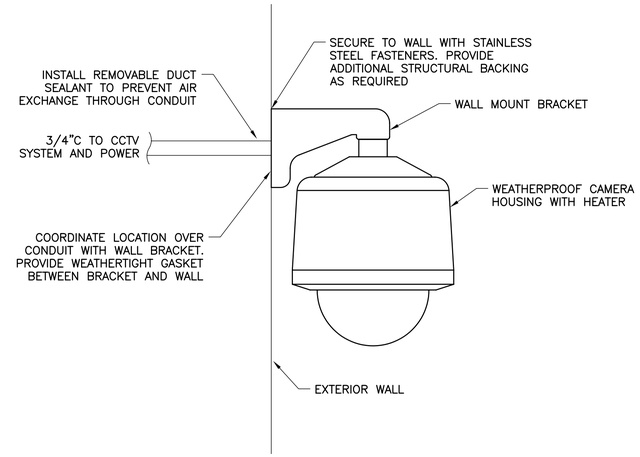

2 E6.3 CAMERA DETAIL – EXTERIOR
SCALE: NONE

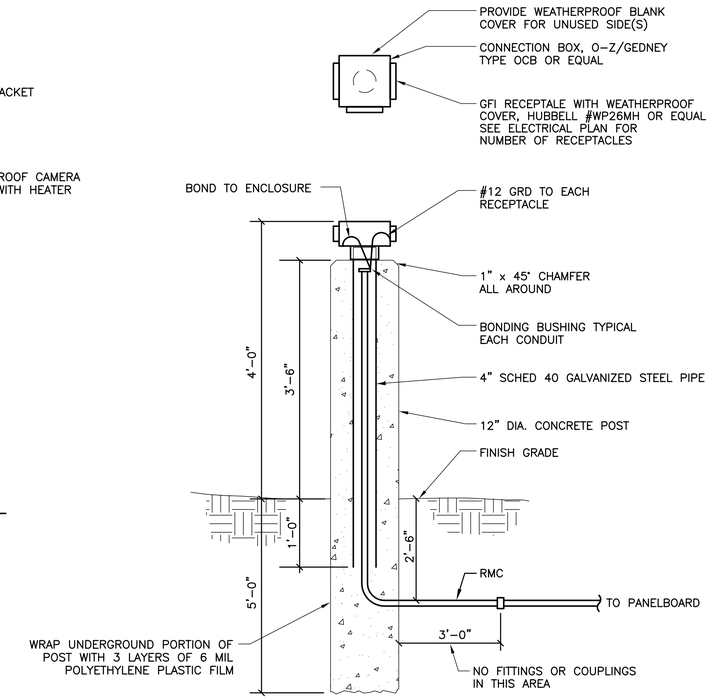

1 E6.3 HEADBOLT HEATER POST DETAIL
SCALE: NONE

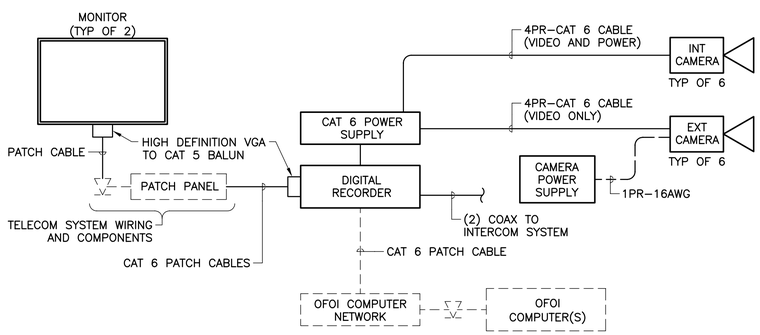

4 E6.3 CCTV RISER DIAGRAM
SCALE: NONE

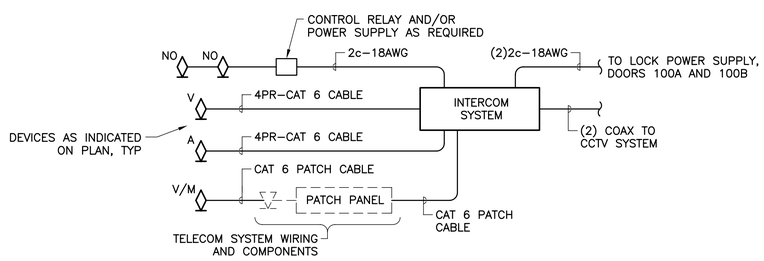

5 E6.3 INTERCOM SYSTEM RISER DIAGRAM
SCALE: NONE

CAMERA SCHEDULE

ID	COVERAGE	HOUSING		CAMERA		LENS			MOUNTING			NOTES
		INT/EXT	TYPE	TYPE	FORMAT	TYPE	FORMAT	FOCAL LENGTH	TYPE	HEIGHT	DETAIL	
01	MAIN ENTRANCE EXTERIOR	EXT	DOME	HRC	1/4-IN	VF-AI	1/4-IN	3-6mm	WALL	8'-0"	2/E6.3	
02	MAIN ENTRANCE INTERIOR	INT	MINI-DOME	HRC	1/4-IN	VF-AI	1/4-IN	3-6mm	CEILING	–	3/E6.3	
03	LOADING PLATFORM	EXT	DOME	HRC	1/4-IN	VF-AI	1/3-IN	3-6mm	WALL	8'-0"	2/E6.3	
04	EAST ENTRANCE EXTERIOR	EXT	DOME	HRC	1/4-IN	VF-AI	1/4-IN	3-6mm	WALL	8'-0"	2/E6.3	
05	EAST ENTRANCE INTERIOR	INT	MINI-DOME	HRC	1/4-IN	VF-AI	1/4-IN	3-6mm	CEILING	–	3/E6.3	
06	SOUTH ENTRANCE EXTERIOR	EXT	DOME	HRC	1/4-IN	VF-AI	1/4-IN	3-6mm	WALL	8'-0"	2/E6.3	
07	SOUTH ENTRANCE INTERIOR	INT	MINI-DOME	HRC	1/4-IN	VF-AI	1/3-IN	3-6mm	CEILING	–	3/E6.3	
08	BALCONY EXTERIOR	EXT	DOME	HRC	1/4-IN	VF-AI	1/4-IN	3-6mm	WALL	8'-0"	2/E6.3	
09	BALCONY INTERIOR	INT	MINI-DOME	HRC	1/4-IN	VF-AI	1/3-IN	3-6mm	CEILING	–	3/E6.3	
10	CHILDRENS PLAY	INT	MINI-DOME	HRC	1/4-IN	VF-AI	1/4-IN	3-6mm	CEILING	–	3/E6.3	
11	PLAY DECK	EXT	DOME	HRC	1/4-IN	VF-AI	1/4-IN	3-6mm	WALL	8'-0"	2/E6.3	
12	MAIN CORRIDOR	INT	MINI-DOME	HRC	1/4-IN	VF-AI	1/4-IN	3-6mm	CEILING	–	3/E6.3	

ABBREVIATIONS:

INT = INTERIOR
EXT = EXTERIOR

SRB = STANDARD RESOLUTION B/W
HRB = HIGH RESOLUTION B/W
SRC = STANDARD RESOLUTION COLOR
HRC = HIGH RESOLUTION COLOR

FF = FIXED FOCUS
VF = VARIABLE FOCUS
MOZ = MOTORIZED ZOOM
MI = MANUAL IRIS
AI = AUTO IRIS

STATE OF ALASKA 49TH
LUCAS SCHNELLER
EE-11399
REGISTERED PROFESSIONAL ENGINEER

Date Stamped: 4/21/09

Date	Revision	By

USKH
Architecture • Engineering
Land Surveying • Planning

2515 'A' Street
Anchorage, Alaska 99503
(907) 276-4245

544 4th Avenue, Suite 102
Fairbanks, Alaska 99701
(907) 452-2128

3031 Clinton Drive
Suite 200
Juneau, Alaska 99801
(907) 790-2901

351 W Parks Hwy, Suite 200
Wasilla, Alaska 99654
(907) 376-7815

Project:
DOMESTIC VIOLENCE SHELTER

TUNDRA WOMEN'S COALITION
P.O. BOX 2029
250 6th AVENUE
BETHEL, ALASKA 99559

Project Mgr.	JC
Drawn	LPS
Checked	GRH
Date	21 APRIL 2009

Sheet Contents:
DETAILS

Sheet No.:
E6.3

USKH W.O. 1074400

DRAWING NAME: I:\1074400\Dwgs\E\sheets\1074400-E6_3.dwg PLOTTED: Apr 21, 2009 - 9:54am

HEADBOLT HEATER RECEPTACLE CONTROL NOTES: ⬡

1. MOUNT CONTROLS IN NEMA 1 ENCLOSURE(S) IN THE ELECTRICAL ROOM UNLESS OTHERWISE INDICATED.
2. ON–OFF–AUTO SWITCH, SQUARE D #KS43B OR APPROVED EQUAL.
3. 30A CONTACTOR WITH NUMBER OF POLES AS REQUIRED PLUS MINIMUM 1 SPARE. CONTACTOR SHALL BE ELECTRICALLY HELD WITH 120V COIL, SQUARE D TYPE LO OR APPROVED EQUAL,
4. 120V ADJUSTABLE THERMOSTAT WITH REMOTE TEMPERATURE PROBE LOCATED ON THE EXTERIOR OF THE BUILDING. SET AT 20°F.

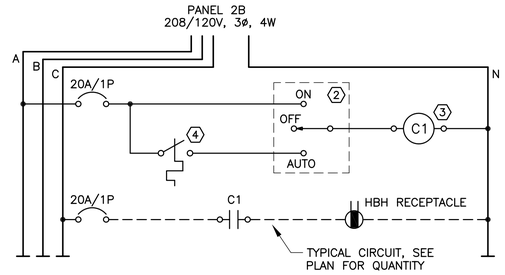

2 / E6.4 HEATBOLT HEATER RECEPTACLE CONTROL DIAGRAM
SCALE: NONE

EXTERIOR LIGHTING CONTROL NOTES: ⬡

1. MOUNT LIGHTING CONTROLS IN NEMA 1 ENCLOSURE(S) IN THE MECHANICAL ROOM UNLESS OTHERWISE INDICATED.
2. ON–OFF–AUTO SWITCH, SQUARE D #KS43B OR APPROVED EQUAL.
3. 30A/4–POLE CONTACTOR. CONTACTOR SHALL BE ELECTRICALLY HELD WITH 120V COIL, SQUARE D TYPE LO OR APPROVED EQUAL,
4. 120V ADJUSTABLE PHOTOCELL LOCATED ON THE EXTERIOR OF THE BUILDING, SEE FLOOR PLAN FOR LOCATION.
5. 120V CONTROL RELAY, PROVIDE WITH N.O. & N.C. CONTACTS AS REQUIRED WITH MINIMUM (1) SPARE CONTACT OF EACH TYPE.

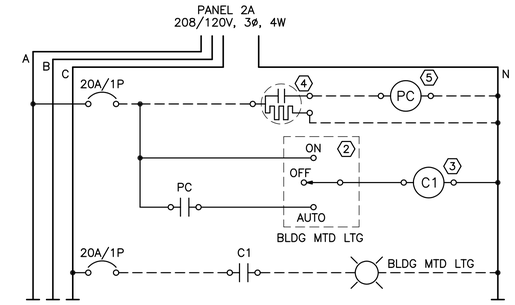

1 / E6.4 EXTERIOR LIGHTING CONTROL DIAGRAM
SCALE: NONE

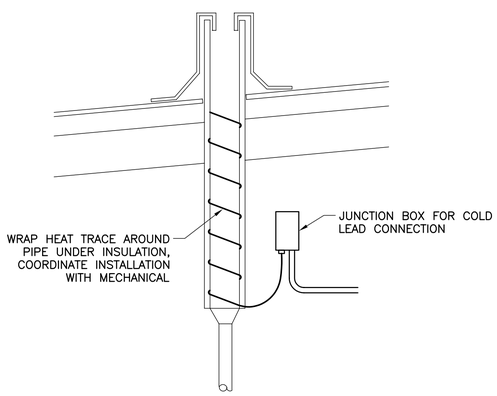

5 / E6.4 VENT HEAT TRACE DETAIL
SCALE: NONE

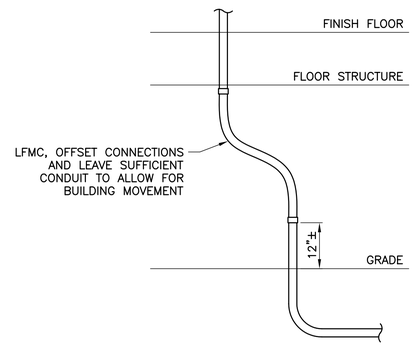

NOTE:
DETAIL IS TYPICAL FOR ALL CONDUITS ENTERING BUILDING FROM BELOW GRADE

4 / E6.4 CONDUIT CONNECTION DETAIL
SCALE: NONE

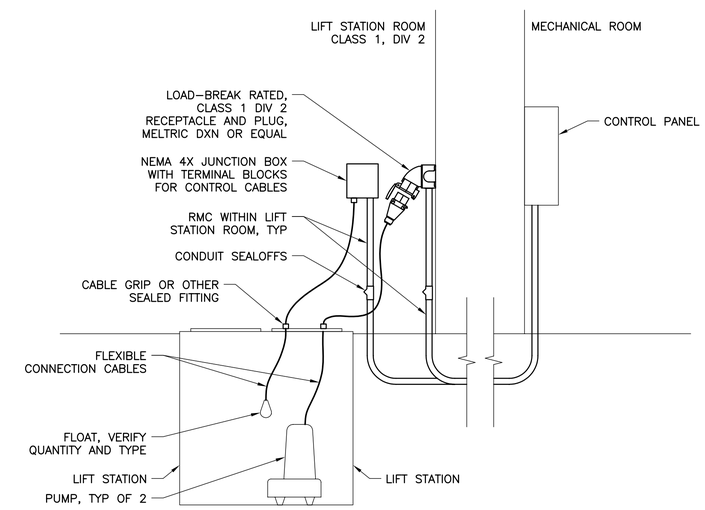

3 / E6.4 LIFT STATION WIRING DETAIL
SCALE: NONE

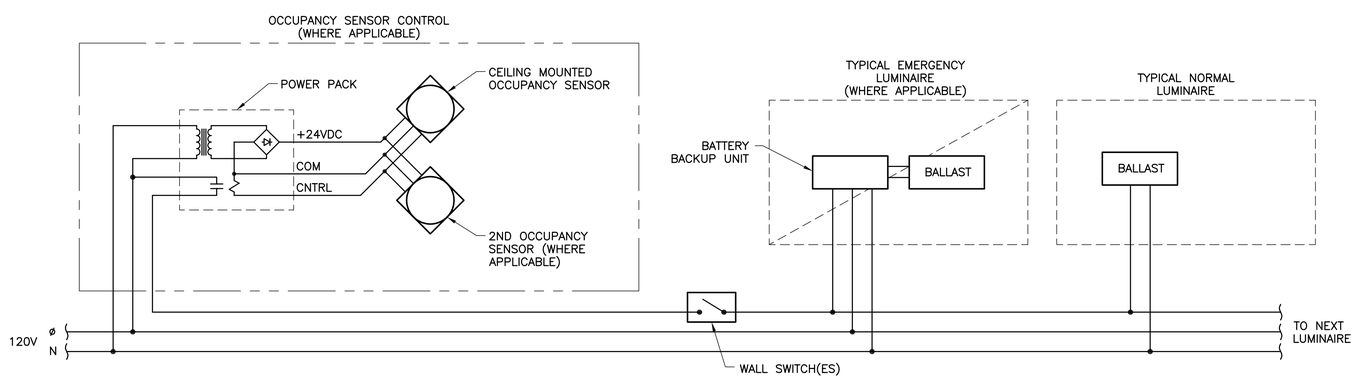

6 / E6.4 TYPICAL LIGHTING CONTROL DETAIL
SCALE: NONE

STATE OF ALASKA 49TH
LUCAS SCHNELLER
EE-11399
REGISTERED PROFESSIONAL ENGINEER

Date Stamped: 4/21/09

Date	Revision	By

USKH
Architecture • Engineering
Land Surveying • Planning

2515 'A' Street
Anchorage, Alaska 99503
(907) 276–4245

544 4th Avenue, Suite 102
Fairbanks, Alaska 99701
(907) 452–2128

3031 Clinton Drive
Suite 200
Juneau, Alaska 99801
(907) 790–2901

351 W Parks Hwy, Suite 200
Wasilla, Alaska 99654
(907) 376–7815

Project:
DOMESTIC VIOLENCE SHELTER

TUNDRA WOMEN'S COALITION
P.O. BOX 2029
250 6th AVENUE
BETHEL, ALASKA 99559

Project Mgr.	JC
Drawn	LPS
Checked	GRH
Date	21 APRIL 2009

Sheet Contents:
DETAILS

Sheet No.:
E6.4

USKH W.O. 1074400

DRAWING NAME: i:\1074400\Dwgs\E\sheets\1074400-E6_4.dwg PLOTTED: Apr 21, 2009 - 9:54am